AUTOVÍA DEL ALMANZORA (A-334). PROYECTO DE CONSTRUCCIÓN ACTUALIZADO. TRAMO: INTERSECCIÓN EL CUCADOR – ENLACE CON AL-7106 EN LA CONCEPCIÓN

ANEJO Nº 13 ESTRUCTURAS

Fichero: CAL0120APR0_A13 Estructuras_Rev01.docx

Lista de Revisiones anteriores

Fecha	Revisión modificada	Causa de la modificación
Octubre 2017	Rev00	Informe supervisión

Equipo Redactor

Redactado:	Revisado y aprobado:
ACL DISEÑO Y CÁLCULO DE ESTRUCTURAS	**Juan Herrara Moscardó** **Octubre 2017**

ÍNDICE DE CONTENIDO

1.- INTRODUCCIÓN..... 1

2.- DESCRIPCIÓN DE LAS ESTRUCTURAS 1

2.1 Estructura E-01. Paso superior Vía pecuaria. P.K. 0+045. 1
2.2 Estructura E-02. Obra de paso P.K. 0+330 (Enlace A-334) 2
2.3 Estructura E-03, Viaducto Rio Almanzora. PP.KK. 0+620 al 0+920. 2
2.4 Estructura E-04. Paso inferior cruce AL -7106. P.K. 1+920..... 3
2.5 Estructura E-05. Barranco Llorón. P.K. 2+000..... 3
2.6 Estructura E-06. Rambla del Agua. P.K. 2+800..... 4
2.7 Estructura E-07. Paso Central fotovoltaica. P.K. 3+250. 5
2.8 Muros 1 y 2..... 5

APÉNDICE 1.- DEFINICIÓN Y CÁLCULOS ESTRUCTURA E-01

APÉNDICE 2.- DEFINICIÓN Y CÁLCULOS ESTRUCTURA E-02

APÉNDICE 3.- DEFINICIÓN Y CÁLCULOS ESTRUCTURA E-03

APÉNDICE 4.- DEFINICIÓN Y CÁLCULOS ESTRUCTURA E-04

APÉNDICE 5.- DEFINICIÓN Y CÁLCULOS ESTRUCTURA E-05

APÉNDICE 6.- DEFINICIÓN Y CÁLCULOS ESTRUCTURA E-06

APÉNDICE 7.- DEFINICIÓN Y CÁLCULOS ESTRUCTURA E-07

APÉNDICE 8.- DEFINICIÓN Y CÁLCULOS MURO 1

APÉNDICE 9.- DEFINICIÓN Y CÁLCULOS MURO 2

Anejo nº 13 Estructuras

1.- INTRODUCCIÓN

En este Anejo se realiza una descripción de las estructuras que comprenden el presente proyecto, las hipótesis de partida, las bases de cálculo, así como los resultados obtenidos.

En general, la tipología de las estructuras se ha resuelto mediante estructuras tipo losa aligerada ejecutadas in situ, para las estructuras que cruzan superiormente la rasante de la autovía en un tramo de nueva construcción, tableros de vigas artesas prefabricadas en el enlace de la A-334 y pasos prefabricados de vigas doble T y cajones, en el caso de las obras de paso y pasos inferiores, donde la autovía cruza superiormente la vaguada, vía secundaria o camino.

La tipología elegida para las estructuras del tramo comprendido entre la localidad de el Cucador y la Concepción mantiene la uniformidad tipológica con las estructuras de los tramos adyacentes con objeto de no romper la impresión visual del conductor de la estética de la autovía.

2.- DESCRIPCIÓN DE LAS ESTRUCTURAS

2.1 Estructura E-01. Paso superior Vía pecuaria. P.K. 0+045.

La estructura E1 consiste en un paso superior dispuesto en el PK 0+044.50 por la que se permite el paso de un camino sobre el tronco, de una vía Pecuaria. Se trata de una estructura continua de dos (2) vanos según una distribución de 34.0+34.0 m. La estructura se dispone prácticamente perpendicular a la autovía siendo su esviaje nulo.

El tablero de la estructura consiste en una losa continua aligerada de canto constante. Por tanto la tipología considerada para este paso superior se corresponde a un esquema hiperestático. El canto del tablero es constante de valor de 1,65 m. Se le ha dado al tablero un bombeo del 2%.

El tablero consta de una anchura total de 9,30 m. Alberga una calzada de 8 metros más la anchura correspondiente a los pretiles (65 cm a cada lado). La geometría de la citada sección transversal se caracteriza por poseer sendos voladizos laterales de 2 metros de longitud, y con un espesor variable entre 0,20 metros en el extremo y 0,38 metros en el arranque. La anchura libre del tablero es de 8,00 m, al disponerse en ambos extremos de la sección un pretil metálico que ocupa 0,65 metros.

La losa del tablero será de hormigón postesado. De este modo se ha definido un total de 12 tendones en el tablero en cada uno de los cuales se disponen 24 cordones ø12.7” (100 mm2). Se disponen anclajes activos en ambos extremos del tablero.

La ejecución del tablero se realizará in situ con la ayuda de cimbras y los correspondientes encofrados.

El apoyo del mismo en los estribos se materializa por medio de tres aparatos elastoméricos de neopreno, mientras que el apoyo en cada uno de los dos fustes de la pila se realiza por medio de un único apoyo.

La pila posee dos fustes de forma circular con 1,20 m de diámetro, separados 2.5 metros entre sí. La altura de los fustes es de 7.2 metros. Sobre cada uno de los fustes se sitúa un neopreno circular anclado a pila y tablero de 800 mm con un espesor total de 228 mm y 160 mm neto de goma. La cimentación se lleva a cabo mediante un encepado de 6 pilotes de 1,00 m de diámetro. El encepado tiene unas dimensiones en planta de 7,15x4,85 m y 1,40 metros de canto. La longitud prevista de los pilotes es de 15,0 m.

Los estribos están constituidos por una viga de coronación de 1,40 m de canto y 2 metros de anchura. Bajo la misma se disponen de cuatro fustes de 1,20 m de diámetro y 6.8 metros de altura. Por debajo de los fustes se dispone un encepado rectangular de dimensiones 10.6x6x1.4, del que parten 8 pilotes de 1 metros de diámetro, con una longitud de 17 metros.

Sobre cada estribo se colocan tres aparatos de apoyo de dimensiones 700x700x215(140). Dichos aparatos disponen de pernos de anclajes a estribo y tablero, a fin de garantizar una correcta transmisión de las fuerzas horizontales en situación sísmica. La junta de dilatación es de tipo JNA-160, con 160 mm de recorrido total (apertura + cierre), necesaria para absorber los movimientos del tablero en una situación de sismo frecuente, acorde a lo establecido por la normativa española.

Con respecto al pretil de contención a disponer, se considera necesario un nivel de contención H2. Al tratarse de un paso superior sobre el tronco de la autovía, se considera (acorde a la tabla 6 de la OC 35/2014) un riesgo de Accidente “Grave”. Con respecto a la IMD, se consideran unos valores reducidos (IMD<10000 y IMDp<20000) al tratarse de una vía pecuaria.

2.2 Estructura E-02. Obra de paso P.K. 0+330 (Enlace A-334)

La estructura E2 es una estructura recta de un solo vano de 29.00 m de luz entre ejes de apoyos y está resuelta mediante un doble tablero de vigas doble T que se apoya en cargaderos sobre tierra armada. La cimentación de los macizos de tierra armada se realiza sobre terrenos mejorados por sustitución del material existente por un suelo seleccionado, en un espesor de 3 m.

La planta del tablero es recta (cuenta con una pendiente transversal del 2% hacia el exterior de la estructura). La anchura de los tablero es de 11.80 m en la calzada derecha y 15.30 m en la calzada izquierda. El canto del tablero (viga más losa) es de 2.10 m. El tablero de la calzada derecha e izquierda tiene diferente anchura ya que alojan la plataforma de 2 y 3 carriles respectivamente debido a la proximidad de la estructura con el enlace con la A-334.

El tablero de la calzada izquierda se resuelve con 6 vigas pretensadas doble T de 1.85 metros de canto, dispuestas con un intereje de 2.84 metros. Sobre las vigas se dispone la losa de compresión de 25 cm de espesor mínimo y 15.3 metros de anchura, hormigonada in-situ sobre prelosas de 6 cm de canto. El tablero de la calzada derecha se resuelve con 5 vigas pretensadas doble T de 1.85 metros de canto, dispuestas con un intereje de 2.68 metros. Sobre las vigas se dispone la losa de compresión de 25 cm de espesor mínimo y 11.8 metros de anchura, hormigonada in-situ sobre prelosas de 6 cm de canto.

Todos los apoyos de las vigas son de neopreno zunchado de 500x500x171(99) anclados a la subestructura y a las vigas mediante pernos.

El cargadero es una losa de cimentación que se apoya en el suelo mejorado y reforzado con escamas de 12.70 y 16.20 m de largo (para las calzadas derecha e izquierda respectivamente), 6.00 m de ancho y un canto de 1.50 m.

La altura vista del suelo reforzado con escamas es de 10.00 m aproximadamente. El suelo reforzado está constituido por escamas hexagonales de 1.80 m de altura y 2.00 m de anchura, que cuentan con flejes en una malla de 0.60x0.65 m (vertical y horizontalmente). La longitud de los flejes para la altura máxima es de 12.65 m.

Las aletas de la estructura se resuelven también mediante suelo reforzado con escamas. Las mismas se dividen en muros de alturas de 8.50, 6.50 y 4.50 m al igual que el muro 3 del presente proyecto.

Las aletas se resuelven entonces mediante suelo reforzado con flejes planos corrugados. El muro está constituido por escamas hexagonales de 1.80 m de altura y 2.00 m de anchura, que cuentan con flejes en una malla de 0.60x0.65 m (vertical y horizontalmente). El muro se proyecta para una altura máxima característica de 8.50 m. La longitud de los flejes para la altura máxima es de 12.50

Para los pretiles de contención, dadas las características de la vía que soporta el viaducto, se disponen con clase de contención H3.

2.3 Estructura E-03, Viaducto Rio Almanzora. PP.KK. 0+620 al 0+920.

El viaducto cruza el río Almanzora mediante 10 vanos de 30.00 m que se inscriben en una planta de trazado recto. Debido al cruce esviado del viaducto con el cauce del río Almanzora, y con objeto de minimizar en lo posible fenómenos de erosión, se proyecta el tablero del viaducto esviado con un esviaje de 126 gradianes (grados centesimales).

La sección transversal tiene 15.30 m de anchura total en la calzada derecha y 11.80 m en la calzada izquierda. En ambos casos, el tablero aloja una plataforma constituida por dos carriles de 3.50 m de anchura, arcenes de 2.50 y 1.00 m de ancho (derecho e izquierdo) junto con pretiles de 0.65 m de ancho a cada lado. La diferencia entre ambos estriba en la necesidad de un carril adicional en la calzada derecha por la proximidad de la estructura al enlace de la autovía con la A-334.

El tablero de la estructura se resuelve mediante un tablero de vigas doble T de canto total 2.10 m (canto de viga más losa) recto. En ambas calzadas los distintos vanos cuentan con la misma longitud, número y tipo de vigas en todos ellos (6 vigas en la calzada derecha y 5 vigas en la calzada izquierda). El tablero cuenta con una pendiente transversal del 2% hacia el exterior de la calzada.

Con objeto de facilitar su industrialización y puesta en obra se proyecta el tablero con vigas doble T de 1.85 m de canto al igual que en la estructura E-2.

El tablero se comporta verticalmente de forma isostática, mientras que horizontalmente la estructura cuenta con juntas de dilatación en los estribos E-1 y E-2 y en las pilas P-3 y P-7. El objeto de esta división, es reducir en lo posible los esfuerzos debidos a efectos termo higrométricos. En el resto de pilas se proyectan rótulas en la losa de reparto del tablero.

Todos los apoyos de las vigas son de neopreno zunchado de 500x600x201(121) anclados a la subestructura y a las vigas mediante pernos o chapas encastradas en la estructura.

Se prevé disponer juntas de dilatación tipo JNA-160 (o similar) en estribos (160 mm re recorrido total apertura+cierre). Se prevé disponer juntas de dilatación tipo JNA-230 (o similar) en pilas 3 y 7 (230 mm re recorrido total apertura+cierre).

La subestructura está formada por pilas en forma de doble pi. o pi. (para las calzadas derecha e izquierda respectivamente) con alturas comprendidas entre 12.00 y 7.00 m aproximadamente. La planta de las pilas (tanto el dintel como la zapata combinada) reproduce el esviaje de 126 gradianes del tablero.

Los fustes de las pilas son circulares de 1.40 m para todas las pilas en ambas calzadas (3 fustes en el caso de la calzada derecha y dos fustes en el caso de la calzada izquierda). La cimentación de todas las pilas es de tipo profunda, para asegurar la estabilidad de la estructura frente a una situación accidental de socavación del cauce debido a una avenida extraordinaria. Las características de las cimentaciones de pilas son las siguientes:

- Calzada derecha, pilas 1 a 4: Se disponen 6 pilotes de 1.25 metros de diámetro, recogidos en un encepado de dimensiones 14.2x7.55x1.75.
- Calzada derecha, pilas 5 a 9: Se disponen 8 pilotes de 1.25 metros de diámetro, recogidos en un encepado de dimensiones 14.2x6.55x1.75
- Calzada izquierda, pilas 1 a 9: Se disponen 6 pilotes de 1.25 metros de diámetro, recogidos en un encepado de dimensiones 9.4x7.55x1.75

La longitud prevista para los pilotes de todas las pilas es de 19.15 metros.

Los estribos son cerrados con muro en vuelta, cimentados en profundidad. Los estribos se proyectan comunes para ambas calzadas, existiendo únicamente junta de dilatación en el alzado frontal del muro (entre ambas calzadas), pero no así en el encepado.

El estribo 1 posee una altura total máxima (desde cara inferior de encepado hasta coronación del espaldón) de 10 metros. Está cimentado en profundidad mediante 26 pilotes de 1.25 metros de diámetro y 14 metros de longitud dispuestos en 3 hileras transversales de pilotes (9+8+9). El canto del encepado es de 1.5 metros. El espesor del muro frontal es de 1.1 metros. El espesor de los muros en vuelta es de 0.65 m. Por la parte interior del alzado del estribo, se dispone la losa de transición apoyada en la correspondiente ménsula. El espesor superior del espaldón del estribo es de 30 cm.

El estribo 2 posee una altura total máxima (desde cara inferior de encepado hasta coronación del espaldón) de 7.5 metros. Está cimentado en profundidad mediante 18 pilotes de 1.25 metros de diámetro y 14 metros de longitud dispuestos en 2 hileras transversales de pilotes (9+9). El canto del encepado es de 1.5 metros. El espesor del muro frontal es de 1.1 metros. El espesor de los muros en vuelta es de 0.65 m. Por la parte interior del alzado del estribo, se dispone la losa de transición apoyada en la correspondiente ménsula. El espesor superior del espaldón del estribo es de 30 cm.

Para los pretiles de contención, dadas las características de la vía que soporta el viaducto, se disponen con clase de contención H3.

2.4 Estructura E-04. Paso inferior cruce AL -7106. P.K. 1+920

La estructura E-4 se corresponde con el Paso Inferior en el P.K. 1+920 y da paso a la carretera AL-7106 bajo la autovía. La estructura consiste en un marco de hormigón armado ejecutado in situ, cuyas dimensiones interiores horizontal y vertical son de 11 m x 6.00 m, respectivamente.

La longitud el marco es de aproximadamente 28.69 m en un tramo único que cruza bajo las calzadas de la autovía. Este tramo se divide en cuatro módulos de igual longitud.

La sección transversal del marco se proyecta con un espesor constante de 70 cm para el dintel, solera y hastiales, no disponiéndose cartelas en las esquinas. El espesor de tierras sobre el dintel es variable entre unas zonas y otras, alcanzando, en la zona de rodadura, un valor máximo de 0.77 m y un mínimo de 0.29 m. Sobre este espesor se dispone una capa de rodadura de 10 cm.

Tanto a la entrada como a la salida del marco se proyectan aletas materializadas mediante muros ménsula de altura variable que se adaptan al perfil de tierras a contener. El alzado de los muros ménsula tiene espesor constante de 70 cm. La cimentación al terreno de los muros será directa a través de zapatas, considerando una tensión admisible del terreno de 25 tn/m2 de acuerdo con lo indicado en la información geotécnica disponible.

2.5 Estructura E-05. Barranco Llorón. P.K. 2+000

La estructura E5 en un viaducto de la autovía que habilita el paso de la misma sobre el Barranco del Llorón. Se proyecta un viaducto independiente para cada una de las calzadas.

Cada puente consta de 4 vanos, los dos laterales de 25 m de longitud y los centrales de 30 m cada uno. El tablero es de vigas prefabricadas doble T de 1.85 m de canto más losa superior hormigonada sobre prelosas, de espesor mínimo 25 cm (losa + prelosa). La losa posee un peralte constante del 2% ya que la estructura se encuentra dentro de una alineación ligeramente curva, si bien a efectos prácticos puede considerarse casi como recta. Los vanos son isostáticos a efectos de cargas verticales, pero cuentan con continuidad en la losa en el apoyo sobre las pilas, únicamente a efectos de acciones horizontales.

El tablero tiene una anchura total de 11.80 m. Alberga una calzada de constituida por dos carriles (7.0 m de anchura) más arcenes de 2.5 y 1.0 m. De esta forma dispone de un sobreancho a cada lado de los carriles de 65 cm, en el que se instalan los pretiles metálicos de seguridad.

Las pilas son tipo pórtico, constituidas por dos fustes circulares de 1.4 m de diámetro unidos en cabeza por un dintel de 1.5 m de canto y 2.0 m de anchura. Los fustes están separados entre sí 7.0 m a ejes. La altura total de las pilas varía entre un máximo de 18.95 m en pila 2 de calzada izquierda y mínimo de 12.78 m en pila 3. La cimentación de cada pila se plantea mediante un encepado de 8.25x12.25x1.9 m sobre 6 pilotes de 1.25 m de diámetro, con longitud de 11 m en pilas 1 y 2, y de 13.5 m en pila 3.

El estribo 1 es tipo cerrado, cimentado igualmente con pilotes. El alzado tiene una altura total de unos 7.4 m, y está formado por un muro frontal de 1.2 m de espesor que se reduce a 40 cm en el espaldón superior. El muro se prolonga también en la anchura de la mediana para contener las tierras en esta zona, y dispone de una junta de dilatación vertical de diferenciación de calzada derecha e izquierda. Para la contención de tierras laterales posee muro en vuelta y aleta colgada de 60 cm de espesor en cada una de las márgenes exteriores. La cimentación de los estribos de ambas calzadas se lleva a cabo mediante un encepado conjunto de 30.0x8.0x1.5 m sobre 14 pilotes de 1.25 m de diámetro y 20 m de longitud.

Respecto al estribo 2, éste se encuentra en coronación de un terraplén. Se ha diseñado como un cargadero cimentado con pilotes que atraviesan el terraplén y se empotran en terreno natural. En este caso se disponen dos estribos independientes de 12.8 m de anchura (uno por calzada), constituidos por una viga cargadero de 2.5x1.3 m, murete de guarda de 40 cm de espesor y aletas colgadas de 60 cm. La cimentación de cada estribo se realiza mediante una fila de 3 pilotes de 1.25 m de diámetro y 21.8 m de longitud.

El apoyo del tablero sobre la subestructura se realiza mediante neoprenos de 450x600x186 (110) en estribos y de 400x500x156 (88) mm en pilas, que disponen de pernos de anclaje a la subestructura y chapa superior vulcanizada al neopreno que se suelda a chapa embebida en las vigas. La junta de dilatación es de tipo JNA-230, con 230 mm de recorrido total (apertura + cierre), necesaria para absorber los movimientos del tablero en una situación de sismo frecuente, acorde a lo establecido por la normativa española.

Para los pretiles de contención, dadas las características de la vía que soporta el viaducto, se disponen con clase de contención H3.

2.6 Estructura E-06. Rambla del Agua. P.K. 2+800

La estructura E6 en un viaducto de la autovía que habilita el paso de la misma sobre el Barranco de la Rambla del Agua. Se proyecta un viaducto independiente para cada una de las calzadas.

Cada puente consta de 3 vanos, los dos laterales de 23.5 m de longitud y el central de 28 m. El tablero es de vigas prefabricadas doble T de 1.65 m de canto más losa superior hormigonada sobre prelosas, de espesor mínimo 25 cm (losa + prelosa). La losa posee un peralte constante del 2% ya que la estructura se encuentra dentro de una alineación ligeramente curva, si bien a efectos prácticos puede considerarse casi como recta. Los vanos son isostáticos a efectos de cargas verticales, pero cuentan con continuidad en la losa en el apoyo sobre las pilas, únicamente a efectos de acciones horizontales. En planta, la estructura se dispone esviada 25º respecto al eje de trazado.

El tablero tiene una anchura total de 15.3 m. Alberga una calzada de constituida por dos carriles (10.5 m de anchura) más arcenes de 2.5 y 1.0 m. De esta forma dispone de un sobreancho a cada lado de los carriles de 65 cm, en el que se instalan los pretiles metálicos de seguridad.

Las pilas son tipo pórtico, constituidas por tres fustes circulares de 1.4 m de diámetro unidos en cabeza por un dintel de 1.5 m de canto y 2.1 m de anchura. Los fustes están separados entre sí 5.5 m a ejes. La altura total de las pilas es de unos 9.4 m. La cimentación de cada pila se plantea mediante un encepado de 6.25x13.45x1.75 m sobre 8 pilotes de 1.25 m de diámetro, con longitud de 18 m.

El estribo 1 es de tipo cerrado, constituido por un cuerpo independiente por cada calzada, debido a la variación de altura de ambos, con objeto de adecuarse a la orografía del terreno. Así, la altura de muro en el estribo de calzada derecha es de unos 4.4 m, mientras que en el de calzada izquierda es de unos 7.7 m. Ello lleva a que se cimienten respectivamente con 6 y 10 pilotes de 1.25 m de diámetro, de 18 y 21.2 m de longitud. Ambos estribos disponen de muros en vuelta y aletas colgadas de 65 cm en ambos laterales, para controlar el derrame de tierras del terraplén de acceso.

Respecto al estribo 2, es igualmente cerrado. El alzado tiene una altura total de unos 7.4 m, y está formado por un muro frontal de 1.2 m de espesor que se reduce a 40 cm en el espaldón superior. El muro se prolonga también en la anchura de la mediana para contener las tierras en esta zona, y dispone de una junta de dilatación vertical de diferenciación de calzada derecha e izquierda. Para la contención de tierras laterales posee muro en vuelta y aleta colgada de 65 cm de espesor en cada una de las márgenes exteriores. La cimentación de los estribos de ambas calzadas se lleva a cabo mediante un encepado conjunto de 1.5 m de canto sobre 18 pilotes de 1.25 m de diámetro y 26.5 m de longitud.

El apoyo del tablero sobre la subestructura se realiza mediante neoprenos de 400x500x156 (88) mm en pilas y estribos, que disponen de pernos de anclaje a la subestructura y chapa superior vulcanizada al neopreno que se suelda a chapa embebida en las vigas. La junta de dilatación es de tipo JNA-160, con 160 mm de recorrido total (apertura + cierre), necesaria para absorber los movimientos del tablero en una situación de sismo frecuente, acorde a lo establecido por la normativa española.

Para los pretiles de contención, dadas las características de la vía que soporta el viaducto, se disponen con clase de contención H3.

2.7 Estructura E-07. Paso Central fotovoltaica. P.K. 3+250.

La estructura sirve de plataforma al ramal 1 del enlace de la central fotovoltaica, en el PK 3+250. La estructura se resuelve mediante una losa aligerada de hormigón armado de 63.00 m de longitud total (2 vanos laterales de 13.50 m de luz y vanos centrales de 18.00 m de luz), 11.30 m de anchura y 1.20 m de canto.

El tablero aloja en su sección una plataforma de dos carriles de 3.50 m de ancho y arcenes de 1.50 m a cada lado, junto con pretiles de 0.65 m de anchura (el ramal 1 es de doble sentido de circulación). La planta del tablero es recta.

La sección del tablero, posee un cuerpo central con 7 aligeramientos circulares de 0.7 metros de diámetro. En los lados se disponen voladizos de 1.84 metros de longitud, con un espesor mínimo en el borde de 0.2 metros. En zona de apoyos en estribos y pilas, la sección es maciza desapareciendo los aligeramientos circulares.

La subestructura está formada por pilas de doble fuste circular de 0.85 m de diámetro y cargaderos cimentados en ambos casos sobre el terreno natural (la autovía discurre en trinchera con una profundidad aproximada de 9 m, a la altura del P.K. 3+250 de la misma en su cruce con el paso).

El apoyo del tablero en la subestructura se realiza mediante apoyos rectangulares de 600x500x177(100) en los estribos y circulares de diámetro 650x175(105). En ambos casos los apoyos son anclados a tablero y subestructura.

Cada una de las tres pilas está formada por dos fustes circulares de 0.85 metros de diámetro, separados 2.85 metros entre sí. La altura de los fustes es de 7 metros. La cimentación de las pilas se lleva a cabo de forma directa mediante una zapata combinada de dimensiones 8.2x4.4x1.4 metros.

Los estribos se resuelven mediante vigas tipo cargadero. Dichas vigas tiene una longitud de 12.30 m, una anchura de 3.60 m y un canto de 1.00 m. De dichas vigas sobresale el muro espaldón, así como los muretes laterales para la contención de las tierras del terraplén.

Con respecto al pretil de contención a disponer, se considera necesario un nivel de contención H2. Al tratarse de un paso superior sobre el tronco de la autovía, se considera (acorde a la tabla 6 de la OC 35/2014) un riesgo de Accidente “Grave”. Con respecto a la IMD, se consideran unos valores reducidos (IMD<10000 y IMDp<20000) al tratarse de un ramal.

2.8 Muros 1 y 2.

Se proyectan dos muros en el tramo de autovía estudiado, los cuales se localizan entre el enlace del nuevo tramo de autovía con la actual A-334 (muros 1 y 2).

El muro 1 tiene una longitud aproximada de 140 m. Se proyecta entre el ramal 5 del enlace de la autovía A-334 y la nave existente en el P.K. 0+040 en la margen derecha de la autovía.

El muro se resuelve mediante muros convencionales de hormigón armado tipo ménsula en tres escalones de altura 6.50, 4.50 y 2.50 m de altura. El canto del fuste del muro está comprendido entre 0.60 y 0.30 m (para el muro de altura 6.50 y 2.50 m respectivamente), mientras la anchura de la zapata están comprendida entre 5.85 y 2.35 m (para el muro de altura 6.50 y 2.50 m respectivamente).

El muro 2 tiene una longitud aproximada de 285 m. Se proyecta entre la calzada derecha de la autovía y el ramal 5 del enlace con la A-334, a la altura del P.K. 0+040 del tramo. El muro se resuelve mediante suelo reforzado con flejes planos corrugados, El muro se proyecta para una altura máxima aproximada de 4.50 m de altura total.

El muro está constituido por escamas hexagonales de 1.80 m de altura y 2.00 m de anchura, que cuentan con flejes en una malla de 0.60x0.65 m (vertical y horizontalmente). La longitud de los flejes para la altura máxima es de 7.50 m.

Sevilla, octubre de 2017.

Autor del Anejo

DISEÑO Y CÁLCULO DE ESTRUCTURAS

Apéndice 1.- Definición y cálculos Estructura E-01

DISEÑO Y CÁLCULO DE ESTRUCTURAS

NOTA DE CÁLCULO DE ESTRUCTURA	
PROYECTO:	**AUTOVÍA DE ALMANZORA (A-334). TRAMO: INTERSECCIÓN EL CUCADOR- ENLACE CON LA AL-7106 EN LA CONCEPCIÓN.**
ESTRUCTURA:	**ESTRUCTURA E-1**
SITUACIÓN:	**ALMERÍA**
FECHA:	**8 DE JUNIO DE 2017**

c/ COLUMELA nº15, C.P. 11004 CÁDIZ. Tlf: 956222763 Fax: 956210106
e-mail: acl@acl-estructuras.com http://www.acl-estructuras.com

CONTENIDO DE LA PRESENTE NOTA

MEMORIA DE CÁLCULO

ANEJO DE CÁLCULOS:

- DEFINICIÓN DEL MODELO DE CÁLCULO GENERAL
- CÁLCULO DEL TABLERO
- CÁLCULO DE APARATOS DE APOYO Y JUNTA DE DILATACIÓN
- CÁLCULO DE PILAS Y CIMIENTOS
- CÁLCULO DE ESTRIBOS
- ESFUERZOS Y FLECHAS DE LA PRUEBA DE CARGA

c/ COLUMELA nº15, C.P. 11004 CÁDIZ. Tlf: 956222763 Fax: 956210106
e-mail: acl@acl-estructuras.com *http://www.acl-estructuras.com*

MEMORIA DE CÁLCULO

c/ COLUMELA nº15, C.P. 11004 CÁDIZ. Tlf: 956222763 Fax: 956210106
e-mail: acl@acl-estructuras.com http://www.acl-estructuras.com

ÍNDICE DE LA MEMORIA

1 INTRODUCCIÓN Y OBJETO 6

2 DESCRIPCIÓN DE LA ESTRUCTURA 7

3 BASES DE CÁLCULO 8

4 INSTRUCCIONES Y NORMATIVA DE APLIACIÓN 9

5 PROGRAMAS INFORMÁTICOS EMPLEADOS EN LOS CÁLCULOS 10

6 MATERIALES, RECUBRIMIENTOS Y COEFICIENTES PARCIALES DE SEGURIDAD. 11

7 ACCIONES CONSIDERADAS EN EL CÁLCULO 12

7.1 VALORES CARACTERÍSTICOS DE LAS ACCIONES 12

7.1.1 ACCIONES PERMANENTES 12

7.1.2 ACCIONES PERMANENTES DE VALOR NO CONSTANTE 12

7.1.3 ACCIONES VARIABLES 12

7.1.4 ACCIONES ACCIDENTALES (AQUÍ ME HE QUEDADO) 13

7.2 VALORES REPRESENTATIVOS DE LAS ACCIONES 14

7.3 VALORES DE CÁLCULO DE LAS ACCIONES 14

7.3.1 ESTADOS LÍMITE ÚLTIMOS 14

7.3.2 ESTADOS LÍMITE DE SERVICIO 15

8 COMBINACIÓN DE ACCIONES 16

9 DESCRIPCIÓN DEL MODELO GENERAL DE CÁLCULO DE LA ESTRUCTURA 17

10 CÁLCULO DEL TABLERO 20

10.1 INTRODUCCIÓN 20

10.2 DEFINICIÓN DE LAS SECCIONES TRANSVERSALES. 20

10.3 CÁLCULO DE ESFUERZOS EN SECCIONES, Y REACCIONES Y DEFORMACIONES EN APOYOS. 20

c/ COLUMELA nº15, C.P. 11004 CÁDIZ. Tlf: 956222763 Fax: 956210106
e-mail: acl@acl-estructuras.com http://www.acl-estructuras.com

10.4 DEFINICIÓN DEL PRETENSADO DEL TABLERO. 20
10.5 COMPROBACIÓN EN SERVICIO....20
10.6 COMPROBACIÓN EN ROTURA POR FLEXIÓN....21
10.7 CÁLCULO DE LA ARMADURA PASIVA DEL TABLERO....21
10.8 CÁLCULO DE REFUERZOS LOCALES....21

11 CÁLCULO DE LOS APARATOS DE APOYO Y JUNTAS DE CALZADA.... 22

12 CÁLCULO DE PILAS.... 23

12.1 FUSTES....23
12.2 PILOTES....23
12.3 ENCEPADO....23

13 CÁLCULO DE ESTRIBOS.... 24

13.1 PILOTES....24
13.2 ENCEPADOS....24
13.3 fustes 24
13.4 VIGA CARGADERO 24

14 CÁLCULO DE PRUEBA DE CARGA.... 25

14.1 DESCRIPCIÓN DE LA PRUEBA DE CARGA. 25
14.2 CARGAS DE ENSAYO. 25
14.3 MEDICIONES MÍNIMAS A REALIZAR. 25
14.4 APARATOS DE MEDIDA....26
14.5 PREPARACIÓN Y DESARROLLO DE LA PRUEBA. 26
14.6 RESULTADOS Y TOLERANCIAS. 27
14.7 INFORME DE PRUEBA DE CARGA. 27
14.8 ACTA DE PRUEBA DE CARGA. 28

1 INTRODUCCIÓN Y OBJETO

El objeto del presente documento es el de describir el procedimiento seguido en el cálculo de la Estructura E-1, que se corresponde con el Paso Superior en el P.K. 0+044.5, incluido en el Proyecto de Construcción de la "Autovía de Almanzora (A-334). Tramo: Intersección El Cucador – Enlace con la AL-7106 en la Concepción", en la provincia de Almería. En esta nota técnica se definen las bases de cálculo, características de los materiales, hipótesis adoptadas, medios empleados en el cálculo, resultados obtenidos y conclusiones derivadas del proceso.

Este paso superior fue diseñado y calculado en el proyecto original pero, debido a la fecha en la que se redactó este proyecto, se hace necesario actualizar los cálculos a los cambios normativos que se han producido, adaptando la estructura a la normativa vigente.

c/ COLUMELA nº15, C.P. 11004 CÁDIZ. Tlf: 956222763 Fax: 956210106
e-mail: acl@acl-estructuras.com http://www.acl-estructuras.com

2 DESCRIPCIÓN DE LA ESTRUCTURA

La estructura E1 consiste en un paso superior dispuesto en el PK 0+044.50 por la que se permite el paso de un camino sobre el tronco, de una vía Pecuaria. Se trata de una estructura continúa de dos (2) vanos según una distribución de 34.0+34.0 m. La estructura se dispone prácticamente perpendicular a la autovía siendo su esviaje nulo.

El tablero de la estructura consiste en una losa continua aligerada de canto constante. Por tanto la tipología considerada para este paso superior se corresponde a un esquema hiperestático. El canto del tablero es constante de valor de 1,65 m. Se le ha dado al tablero un bombeo del 2%.

El tablero consta de una anchura total de 9,30 m. Alberga una calzada de 8 metros más la anchura correspondiente a los pretiles (65 cm a cada lado). La geometría de la citada sección transversal se caracteriza por poseer sendos voladizos laterales de 2 metros de longitud, y con un espesor variable entre 0,20 metros en el extremo y 0,38 metros en el arranque. La anchura libre del tablero es de 8,00 m, al disponerse en ambos extremos de la sección un pretil metálico que ocupa 0,65 metros.

La losa del tablero será de hormigón postesado. De este modo se ha definido un total de 12 tendones en el tablero en cada uno de los cuales se disponen 24 cordones Ø12.7” (100 mm2). Se disponen anclajes activos en ambos extremos del tablero.

La ejecución del tablero se realizará in situ con la ayuda de cimbras y los correspondientes encofrados.

El apoyo del mismo en los estribos se materializa por medio de tres aparatos elastoméricos de neopreno, mientras que el apoyo en cada uno de los dos fustes de la pila se realiza por medio de un único apoyo.

La pila posee dos fustes de forma circular con 1,20 m de diámetro, separados 2.5 metros entre sí. La altura de los fustes es de 7.2 metros. Sobre cada uno de los fustes se sitúa un neopreno circular anclado a pila y tablero de 800 mm con un espesor total de 228 mm y 160 mm neto de goma. La cimentación se lleva a cabo mediante un encepado de 6 pilotes de 1,00 m de diámetro. El encepado tiene unas dimensiones en planta de 7,15x4,85 m y 1,40 metros de canto. La longitud prevista de los pilotes es de 15,0 m.

Los estribos están constituidos por una viga de coronación de 1,40 m de canto y 2 metros de anchura. Bajo la misma se disponen de cuatro fustes de 1,20 m de diámetro y 6.8 metros de altura. Por debajo de los fustes se dispone un encepado rectangular de dimensiones 10.6x6x1.4, del que parten 8 pilotes de 1 metros de diámetro, con una longitud de 17 metros.

Sobre cada estribo se colocan tres aparatos de apoyo de dimensiones 700x700x215(140). Dichos aparatos disponen de pernos de anclajes a estribo y tablero, a fin de garantizar una correcta transmisión de las fuerzas horizontales en situación sísmica. La junta de dilatación es de tipo JNA-160, con 160 mm de recorrido total (apertura + cierre), necesaria para absorber los movimientos del tablero en una situación de sismo frecuente, acorde a lo establecido por la normativa española.

Con respecto al pretil de contención a disponer, se considera necesario un nivel de contención H2. Al tratarse de un paso superior sobre el tronco de la autovía, se considera (acorde a la tabla 6 de la OC 35/2014) un riesgo de Accidente “Grave”. Con respecto a la IMD, se consideran unos valores reducidos (IMD<10000 y IMDp<20000) al tratarse de una vía pecuaria.

3 BASES DE CÁLCULO

El dimensionamiento de la estructura se realizará según los principios de la mecánica racional y teoría de estructuras, adaptadas al diseño estructural. Se seguirán las prescripciones recogidas en la normativa vigente en el territorio español, así como las recomendaciones y la normativa internacional de aplicación, cuando proceda. De acuerdo con lo anterior, el cálculo se realizará siguiendo el principio de los Estados Límites, que establece que la seguridad de la estructura en su conjunto, o en cualquiera de sus partes, se garantiza comprobando que la solicitación no supera la respuesta última de las mismas. Este requisito para la seguridad se expresa sintéticamente mediante la siguiente desigualdad:

$$Sd<Rd$$

Siendo Sd la solicitación de cálculo aplicable en cada caso, y Rd la respuesta última de la sección o elemento.

Para la aplicación de este criterio de seguridad, se consideran tanto situaciones de servicio como de agotamiento, esto es, Estados Límites de Servicio (ELS) y Estados Límites Últimos (ELU), de acuerdo con las definiciones dadas para los mismos en las normativas de referencia. En principio, los Estados Límites Últimos están asociados a la rotura de secciones o elementos. Para ellos, se evalúan las solicitaciones mediante la mayoración de los valores representativos de las acciones (en general característicos), utilizando los oportunos coeficientes parciales que luego se detallan. Las resistencias de las secciones o elementos se estiman mediante las características geométricas, y las resistencias minoradas de los materiales.

Por el contrario, los Estados Límites de Servicio están asociados a la pérdida de funcionalidad de la estructura. Las solicitaciones se evalúan mediante sus valores representativos, en general sin mayorar, afectados de los oportunos coeficientes de combinación, para tener en cuenta la probabilidad de ocurrencia simultánea (concomitancia) de varias acciones. Las resistencias se estiman a partir de los valores nominales de las dimensiones y resistencias de los elementos o secciones de la estructura, sin minorar.

4 INSTRUCCIONES Y NORMATIVA DE APLIACIÓN

El proyecto de la presente estructura se realizará conforme a las prescripciones recogidas en los siguientes textos normativos en vigor:

- Instrucción de Hormigón Estructural (EHE-08).
- Instrucción sobre las Acciones a considerar en el proyecto de Puentes de Carretera (IAP-11).
- Norma de construcción Sismorresistente (NCSP-07).
- Orden Circular 35/2014 Sobre Criterios De Aplicación De Sistemas De Contención De Vehículos.
- Guía de cimentaciones en obras de carretera.

5 PROGRAMAS INFORMÁTICOS EMPLEADOS EN LOS CÁLCULOS

Los cálculos de comprobación de la estructura se llevan a cabo mediante programas de aplicación tanto en el cálculo general de estructuras como en el cálculo de elementos estructurales concretos. Los programas empleados han sido desarrollados bien por empresas especializadas en la elaboración de herramientas informáticas para el cálculo de estructuras o bien por esta propia oficina técnica. El proceso de cálculo de la estructura se diseña de forma que exista la mayor fluidez posible en el intercambio de información entre las diferentes aplicaciones que controlan los subprocesos de cálculo. No obstante lo anterior, tanto los datos de partida como los resultados obtenidos, son siempre verificados en sus órdenes de magnitud, a través de comprobaciones aproximadas.

Los programas informáticos empleados son los que siguen:

a) SAP2000 NonLinear Versión 19: Programa de cálculo de estructuras que utiliza el MEF para la resolución. Desarrollado por Computers and Structures Inc. University Ave. Berkeley. Mediante dicho programa se han realizado diversos modelos de cálculo, los cuales se describen en los puntos siguientes.

b) Prontuario Informático del Hormigón Estructural 3.1. Desarrollado por la Unidad Docente de Hormigón Estructural de la E. T. S. I. C. C. P. de Madrid y el Instituto Español del Cemento y sus Aplicaciones. Adaptado a la EHE-08.

c) Módulo “Sección” del paquete informático CivilCad2000. Permite la modelización y cálculo tensional y en rotura por flexión de secciones de hormigón armado y pretensado.

d) Módulo “CS2Beton” del programa informático CubeCut. Permite la comprobación de flexocompresión esviada de secciones de hormigón armado.

e) Diversas hojas de cálculo y programas desarrollados por el proyectista.

6 MATERIALES, RECUBRIMIENTOS Y COEFICIENTES PARCIALES DE SEGURIDAD.

Las características de los materiales a emplear en la construcción de la estructura objeto de la presente nota de cálculo son, en consonancia con lo dispuesto en la tabla 37.2.4.1.a de la Instrucción EHE-08, las siguientes, para una vida útil de proyecto de 100 años:

CUADRO DE MATERIALES EHE

MATERIALES	CALIDAD	NIVEL DE CONTROL	COEFICIENTES
HORMIGON DE LIMPIEZA Y NIVELACION	HM-15	NO ESTRUCTURAL	
HORMIGON EN LOSA	HP-40/B/20/IIb	ESTADISTICO	$\gamma c = 1.50$
HORMIGON EN ALZADOS DE ESTRIBOS	HA-30/P/20/IIb	ESTADISTICO	$\gamma c = 1.50$
HORMIGON EN ALZADOS DE PILA	HA-30/P/20/IIb	ESTADISTICO	$\gamma c = 1.50$
HORMIGON EN ENCEPADOS	HA-30/P/20/IIa+Qb	ESTADISTICO	$\gamma c = 1.50$
HORMIGON EN PILOTES	HA-30/P/20/IIa+Qb	ESTADISTICO	$\gamma c = 1.50$
ACERO ACTIVO	Y 1860 S7	NORMAL	$\gamma s = 1.15$
ACERO PASIVO	B 500 SD	NORMAL	$\gamma s = 1.15$
EJECUCION		INTENSO	$\gamma G = 1.35$ $\gamma G^* =$ IAP-11 $\gamma Q =$ IAP-11

MATERIALES	RECUBRIMIENTO (mm)	RELACION a/c MÁXIMA	CONTENIDO MINIMO CEMENTO (Kg/m³)	TIPO CEMENTO
HORMIGON EN LOSA	35	0.55	300	CEM I
HORMIGON EN ALZADOS DE ESTRIBOS	40	0.55	300	CEM II
HORMIGON EN ALZADOS DE PILA	40	0.55	300	CEM II
HORMIGON EN ENCEPADOS	50	0.50	350	CEM II+SR
HORMIGON EN PILOTES	60	0.50	350	CEM II+SR

7 ACCIONES CONSIDERADAS EN EL CÁLCULO

La determinación de los valores característicos de las acciones, así como de sus valores representativos y de cálculo y las combinaciones a realizar con las mismas, a fin de verificar el cumplimiento de los estados límite, se lleva a cabo según lo prescrito en la Instrucción IAP-11.

7.1 VALORES CARACTERÍSTICOS DE LAS ACCIONES

7.1.1 ACCIONES PERMANENTES

a) **Peso Propio:** El valor característico del peso de los elementos estructurales de hormigón, se determina tomando como peso específico del mencionado material 25 kN/m3.

b) **Carga Permanente:** Las cargas consideradas son las siguientes:

- Pavimento: Se considera a efectos de cálculo un espesor nominal de 5 cm y un peso especifico de γ=23 kN/m^3. Se ha de considerar también la hipótesis con espesor incrementado un 50% tal y como establece la IAP.
- Pretil metálico + zócalo de hormigón: El peso de cada uno, incluido el zócalo de hormigón, es de 7 kN/ml.

7.1.2 ACCIONES PERMANENTES DE VALOR NO CONSTANTE

a) **Pretensado:** Se trata de un pretensado interior, es decir, dispuesto dentro de la sección de hormigón, por lo que, según la IAP, es de tipo "P1". Para su análisis y evaluación (incluyendo sus pérdidas) se tiene en consideración lo especificado en la Instrucción EHE-08. En el modelo SAP de cálculo general de la estructura, el efecto del pretensado y sus pérdidas se analiza acorde a la formulación recogida en el Código Modelo CEB-FIP 1990, obteniendo valores muy similares a los de la EHE-08.

b) **Acciones reológicas:** Se calculan tanto los coeficientes de retracción y fluencia como el de relajación, tomando como humedad relativa del ambiente un 65%. Se supone que el comienzo de la retracción tiene lugar dos días después del hormigonado, y el de la fluencia 7 días después del hormigonado.

c) **Acciones debidas al terreno:**

- Para los **empujes** generados por el terreno sobre los estribos, se considera un peso específico de las tierras de 20 kN/m^3, y un empuje activo correspondiente a un coeficiente de empuje de Ka = 0.33.
- Con respecto a los **asientos diferenciales**, no se han tenido en cuenta al tratarse de cimentación pilotada.

7.1.3 ACCIONES VARIABLES

d) Tren de cargas.

Se introducen las siguientes acciones:

Se define el valor característico de la sobrecarga de uso considerando lo que la norma denomina grupos de cargas de tráfico. Establece la concomitancia de las distintas componentes de la sobrecarga de uso. Estos grupos son excluyentes entre sí cuando se combinan con el resto de las acciones (cargas permanentes, viento,…).

	Situación			
	Cargas Verticales		**Fuerzas Horizontales**	
Grupos de Cargas	Vehículos Pesados	Sobrecarga Uniforme	Frenado y Arranque	Fuerza Centrífuga y Transversal
gr 1 (Cargas Verticales)	Valor característico	Valor característico	-	-
gr 2 (Fuerzas Horizontales)	Valor reducido 0.75·Qik	Valor reducido 0.40·qik	Valor característico	Valor característico

Los valores característicos son:

- **Cargas Verticales y Horizontales:** se trata de las siguientes acciones:
  - Sobrecarga uniforme: en función del número de carriles virtuales, la sobrecarga será:

Situación	q_{ik} (q_{rk}) kN/m²
Carril Virtual 1	9
Carril Virtual 2	2.5
Carril Virtual 3	2.5
Otros Carriles Virtuales	2.5
Área remanente	2.5

  - Vehículos Pesados: en función del número de carriles virtuales, la sobrecarga será:

Situación	$2 \cdot Q_{ik}$ (kN)
Carril Virtual 1	2·300
Carril Virtual 2	2·200
Carril Virtual 3	2·100
Otros Carriles Virtuales	0
Área remanente	0

  - Frenado, arranque y fuerza centrífuga: son acciones de componente horizontal y calculadas en función de los anchos de de plataforma, radio del eje del tablero, etc. En concreto, para la estructura proyectada, la fuerza resultante de frenado y arranque es de 546 kN. No se aplica fuerza centrífuga al encontrarse en una alineación recta en planta.
- **Sobrecarga en terrenos adyacentes al puente**: se adopta un valor de 10 kN/m2 al considerar esta acción, afectado del coeficiente de empuje del terreno K_a=0.333.

e) Acciones climáticas:

- **Viento:** se evaluarán las solicitaciones que la actuación del viento genera en el tablero con y sin efecto de la sobrecarga de uso y en las pilas. La velocidad de básica del viento es de 26 m/s correspondiente al mapa de isotacas.
- **Acciones térmicas:** se calcula la variación uniforme que puede experimentar la estructura. Para ello, la variación térmica considerada en el cálculo acorde a la IAP-11 corresponde a un enfriamiento de 15.8 º, y a un calentamiento de 35.3º. Con respecto al gradiente térmico, se consideran dos hipótesis:
  - Una diferencia térmica entre la fibra superior del tablero y la inferior de 15ºC (fibra superior más caliente)
  - Una diferencia térmica entre la fibra superior del tablero y la inferior de 8ºC (fibra inferior más caliente)
- **Nieve:** no se considera la actuación de dicha acción debido a no ser concomitante con la actuación de la sobrecarga, siendo esta última mucho más desfavorable.

7.1.4 ACCIONES ACCIDENTALES (AQUÍ ME HE QUEDADO)

f) **Sismo:** Para el cálculo de la acción sísmica se han seguido las indicaciones recogidas en la NCSP-07. Los parámetros que se han adoptado son los siguientes:

- Aceleración básica: 0.14g
- Coeficiente de daño: 1 (acorde a IAP-11 al tratarse de un paso superior)
- Coeficiente de las Azores (K): 1.0
- Coeficiente de tipo de suelo: Dada la naturaleza del terreno, se adopta un coeficiente de 1.39
- Coeficiente de comportamiento (q): 1.0

7.2 VALORES REPRESENTATIVOS DE LAS ACCIONES

En general, para acciones permanentes, permanentes de valor no constante y accidentales, se considera un único valor representativo (que será el adoptado para la verificación de los estados límite), coincidente con el valor característico descrito en el anterior apartado.

Por el contrario, en el caso de las acciones variables, se tienen en consideración diferentes valores representativos, que se utilizarán en distintas combinaciones de acciones. Dichos valores resultan de afectar al valor característico de la acción de los coeficientes definidos en el punto 6.1.2 de la IAP-11.

ACCIÓN			Ψ_0	Ψ_1	Ψ_2
Sobrecarga de uso	gr 1, Cargas Verticales	V. Pesados	0.75	0.75	0.0
		S. Uniforme	0.4	0.4	0/0.2*
	gr 2, Fuerzas Horizontales		0.0	0.0	0.0
Viento	Fwk	Sit. Persistente	0.6	0.2	0.0
		En Construcción	0.8	0.0	0.0
Acción Térmica	Tk		0.6	0.6	0.5
Nieve	Qsn,k	En Construcción	0.8	0.0	0.0
Acción del agua	Wk	E. Hidrostático	1.0	1.0	1.0
		E.	1.0	1.0	1.0
Sobrecargas de Construcción	Qc		1.0	0.0	1.0

*El factor de simultaneidad correspondiente a la sobrecarga uniforme se tomará igual a 0, salvo en el caso de la combinación de acciones en situación sísmica, para la cual se tomará igual a 0.2.

7.3 VALORES DE CÁLCULO DE LAS ACCIONES

7.3.1 ESTADOS LÍMITE ÚLTIMOS

Para los coeficientes parciales de seguridad, γF, se adoptan los valores recogidos en la siguiente tabla:

TIPO DE ACCIÓN		SITUACIONES PERSISTENTES Y TRANSITORIAS	
		Efecto favorable	Efecto desfavorable
Permanentes		1.0	1.35
Permanentes de valor no Constante	Pretensado	1.0	1.0/1.2*
	Reológicas	1.0	1.35
	Empuje del terreno	1.0	1.5
Variables	Sobrecarga de uso	0.0	1.35
	Sobrecarga de uso en terraplenes	0.0	1.50
	Acciones climáticas	0.0	1.50
	Empujes de agua	0.0	1.50
	Sobrecargas de Construcción	0.0	1.35
Accidentales		0.0	1.0

*El valor 1.2 para verificaciones locales tales como la transmisión de la fuerza de pretensado al hormigón en zonas de anclajes, cuando se toma como valor de la acción el que corresponde a la carga máxima (tensión de rotura) del elemento a tesar.

7.3.2 ESTADOS LÍMITE DE SERVICIO

Para los coeficientes parciales de seguridad, γF, se adoptan los valores recogidos en la siguiente tabla:

TIPO DE ACCIÓN		*SITUACIONES PERSISTENTES Y TRANSITORIAS*	
		Efecto favorable	Efecto desfavorable
PERMANENTE		1.0	1.0
PERMANENTE DE VALOR NO CONSTANTE	PRETENSADO	0.9	1.10
	REOLÓGICAS	1.0	1.0
	TERRENO	1.0	1.0
VARIABLE		0.0	1.0

8 COMBINACIÓN DE ACCIONES

Las hipótesis de carga tomadas en consideración se forman combinando los valores de cálculo de las acciones cuya actuación pueda ser simultánea (acciones concomitantes), según los criterios generales prescritos en el capítulo 6.3 de la instrucción IAP-11, tanto para Estados Límite Últimos, en situaciones persistentes o transitorias y accidentales, como para Estados Límite de Servicio.

9 DESCRIPCIÓN DEL MODELO GENERAL DE CÁLCULO DE LA ESTRUCTURA

Para el cálculo de la estructura se ha llevado a cabo un modelo de cálculo global, que integra el comportamiento resistente de todos los elementos de la estructura, teniendo en cuenta sus dimensiones geométricas definitivas. El modelo de cálculo también tiene en cuenta el pretensado de la estructura en su configuración definitiva.

Para la rigidez de los neoprenos frente a acciones horizontales se ha tenido en cuenta las dimensiones en planta de los mismos así como el espesor neto de goma y teniendo en cuenta además un doble valor del coeficiente G acorde a la normativa vigente los valores tenidos en cuenta en la modelización son: G_{min} = 990 kPa y G_{max}= 1485 kPa.

Los pilotes se han modelizado como apoyos flexibles a nivel del punto de inflexión de los mismos. La determinación de la flexibilidad de los pilotes frente a acciones horizontales, así como la profundidad del punto de inflexión de los mismos se lleva a cabo mediante un modelo auxiliar que analiza la interacción suelo-estructura. Para dicho modelo, se han tenido en cuenta los coeficientes de balasto indicados en el informe geotécnico.

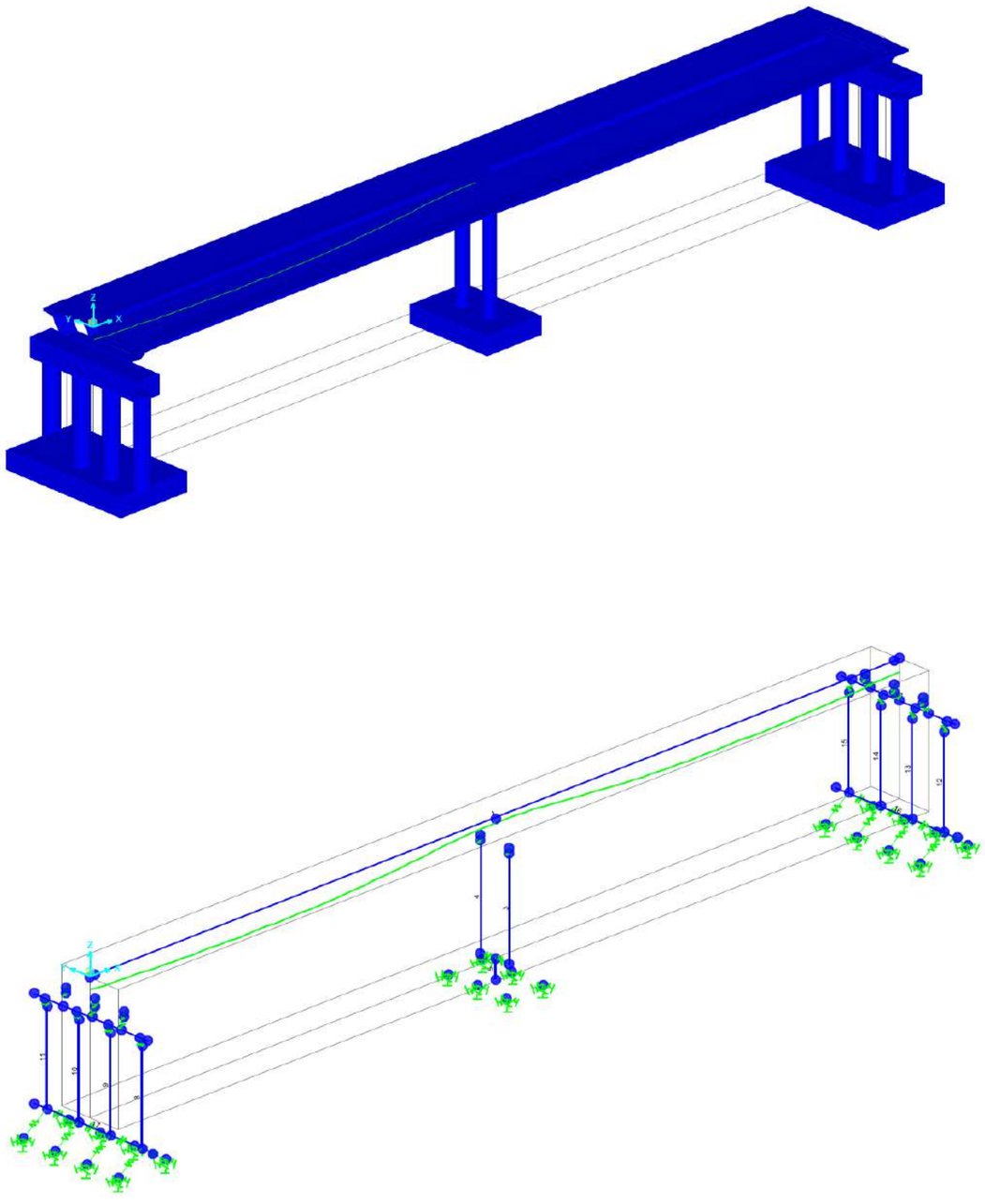

Figura 1: Vistas generales del modelo de cálculo realizado

Una vez confeccionado el modelo de cálculo, se han introducido todas las cargas horizontales y verticales descritas en el punto 7 de la presente memoria. Las cargas introducidas se recogen en la siguiente tabla:

CARGAS EN ESTRUCTURA

LOAD CASE	DESCRIPCIÓN	VALOR	UNIDADES
DEAD	PESO PROPIO ESTRUCTURAL. Incluye como cargas exteriores, el peso de espaldon y aletas en estribos	25	kN/m3
TESADO	ACCIÓN DEL PRETENSADO A TIEMPO INFINITO, INCLUYENDO TODAS LAS PÉRDIDAS INSTANTÁNEAS Y DIFERIDAS	SAP	
PAVIMENTO	SE CONSIDERA UN ESPESOR DE 5 CM (23 kN/m3) Y UNA ANCHURA DE 8 METROS. SE INCREMENTA EL PESO UN 50% ACORDE A IAP	13.8	kN/ml
BARRERAS	SE ADOPTA UN PESO DE 7 kN/ml EN CADA BORDE	14	kN/ml
PTIERR_CIM	PESO DE LAS TIERRAS GRAVITANDO SOBRE LOS CIMIENTOS. DE CONSIDERA UN PESO ESPECÍFICO DE 18 kN/m3. ALTURA DE TIERRAS EN PILA= 1.65 . ALTURA DE TIERRAS EN ESTRIBOS = 8.25 METROS	VARIOS	kN y m
SC_CARRIL_1	SOBRECARGA DISTRIBUIDA (9 kN/m2) APLICADA SOBRE CARRIL VIRTUAL 1	VARIAS	kN y m
SC_CARRIL_2	SOBRECARGA DISTRIBUIDA (2.5 kN/m2) APLICADA SOBRE CARRIL VIRTUAL 2	VARIAS	kN y m
SC_CARRIL_REM	SOBRECARGA DISTRIBUIDA (2.5 kN/m2) APLICADA SOBRE CARRIL REMANENTE DE 2 METROS DE ANCHURA	VARIAS	kN y m
VP_CARRIL_1	VEHÍCULO PESADO (2X300 kN) APLICADO SOBRE CARRIL VIRTUAL 1		
VP_CARRIL_2	VEHÍCULO PESADO (2X200 kN) APLICADO SOBRE CARRIL VIRTUAL 2		
RETRYFLU	DEFORMACIÓN IMPUESTA POR RETRACCIÓN Y FLUENCIA	7.17E-04	m/m
GRAD_TERM_1	INCREMENTO TÉRMICO DE 15ºc DE LA FIBRA SUPERIOR RESPECTO DE LA FIBRA INFERIOR	9.09	ºC/m
GRAD_TERM_2	DECREMENTO TÉRMIC8 DE 8ºc DE LA FIBRA SUPERIOR RESPECTO DE LA FIBRA INFERIOR	-4.85	ºC/m
TEMP_UNIF	SE CONSIDERA UN DECREMENTO TÉRMICO DE -15.8ºC RESPECTO DE LA TEMPERATURA DE MONTAJE (SEGÚN CÁLCULO IAP)	-15.80	ºC
FRENADO_1	FUERZA DE FRENADO DE 7.92 kN/ml EN SENTIDO DE X+	7.92	kN/ml
FRENADO_2	FUERZA DE FRENADO DE 7.92 kN/ml EN SENTIDO DE X-	-7.92	kN/ml
VIENTO	VIENTO TRANSVERSAL EN TABLERO Y PILAS (6.29 kN/ml tablero y 2.3 kN/ml pila)	6.29	kN/ml
E_TIERRAS	SE CONSIDERA EL EMPUJE SOBRE LA VIGA CARGADERO DE LOS ESTRIBOS. ALTURA 3.32 m. PESO ESPECÍFICO = 18 kN/m3. COEF. EMPUJE =0.3333. EXCENTRICIDAD = 0.41 m	33.07	kN/ml
E_SC	SE CONSIDERA EL EMPUJE SOBRE LA VIGA CARGADERO DE LOS ESTRIBOS. ALTURA 3.32 m. SOBRECARGA=10 kPa. COEF. EMPUJE =0.3333. EXCENTRICIDAD = 0.96 m	11.06	kN/ml

LOAD CASE	DESCRIPCIÓN	VALOR	UNIDADES
SISMO_X	ACCIÓN SISMICA EN DIRECCIÓN X	ESPECTRO	
SISMO_Y	ACCIÓN SISMICA EN DIRECCIÓN Y	ESPECTRO	
SISMO_Z	ACCIÓN SISMICA EN DIRECCIÓN Z	ESPECTRO	

Tabla 1: Casos de carga tenidos en cuenta en el modelo general de la estructura

También se han llevado a cabo las pertinentes combinaciones de acciones realizadas en base a los criterios indicados en los puntos 7 y 8. Tras la presente memoria, se incluye un apéndice en el que se recoge una descripción pormenorizada del modelo de cálculo realizado. En concreto, las combinaciones de acciones tenidas en cuenta son las siguientes:

	CUASIP	FREC_01	FREC_02	CARACT_01	CARACT_02
DEAD	1.00	1.00	1.00	1.00	1.00
TESADO	0.90	0.90	1.10	0.90	1.10
PAVIMENTO	1.00	1.00	1.00	1.00	1.00
BARRERAS	1.00	1.00	1.00	1.00	1.00
PTIERR_CIM	1.00	1.00	1.00	1.00	1.00
SC_CARRIL_1	0.00	0.40	0.40	1.00	1.00
SC_CARRIL_2	0.00	0.40	0.40	1.00	1.00
SC_CARRIL_REM	0.00	0.40	0.40	1.00	1.00
VP_CARRIL_1	0.00	0.75	0.75	1.00	1.00
VP_CARRIL_2	0.00	0.75	0.75	1.00	1.00
RETRYFLU	1.00	1.00	1.00	1.00	1.00
GRAD_TERM	0.50	0.50	0.50	0.60	0.60
TEMP_UNIF	0.50	0.50	0.50	0.60	0.60
FRENADO	0.00	0.00	0.00	1.00	1.00
VIENTO	0.00	0.00	0.00	0.60	0.60
E_TIERRAS	1.00	1.00	1.00	1.00	1.00
E_SC	0.00	0.00	0.00	1.00	1.00
SISMO_X	0.00	0.00	0.00	0.00	0.00
SISMO_Y	0.00	0.00	0.00	0.00	0.00
SISMO_Z	0.00	0.00	0.00	0.00	0.00

Tabla 2: Combinaciones tenidas en cuenta en el modelo general para las comprobaciones en ELS

	ELU_01	ELU_02	ELU_SIS_X	ELU_SIS_Y	ELU_SIS_Z
DEAD	1.35	1.00	1.00	1.00	1.00
TESADO	1.00	1.00	1.00	1.00	1.00
PAVIMENTO	1.35	0.67	1.00	1.00	1.00
BARRERAS	1.35	1.00	1.00	1.00	1.00
PTIERR_CIM	1.35	1.00	1.00	1.00	1.00
SC_CARRIL_1	1.35	1.35	0.20	0.20	0.20
SC_CARRIL_2	1.35	1.35	0.20	0.20	0.20
SC_CARRIL_REM	1.35	1.35	0.20	0.20	0.20
VP_CARRIL_1	1.35	1.35	0.00	0.00	0.00
VP_CARRIL_2	1.35	1.35	0.00	0.00	0.00
RETRYFLU	1.35	1.35	1.00	1.00	1.00
GRAD_TERM	0.90	0.90	0.00	0.00	0.00
TEMP_UNIF	0.90	0.90	0.00	0.00	0.00
FRENADO	1.35	1.35	0.00	0.00	0.00
VIENTO	0.90	0.90	0.00	0.00	0.00
E_TIERRAS	1.50	1.50	1.00	1.00	1.00
E_SC	1.50	1.50	0.00	0.00	0.00
SISMO_X	0.00	0.00	1.00	0.30	0.30
SISMO_Y	0.00	0.00	0.30	1.00	0.30
SISMO_Z	0.00	0.00	0.30	0.30	1.00

Tabla 3: Combinaciones tenidas en cuenta en el modelo general para las comprobaciones en ELU

10 CÁLCULO DEL TABLERO

10.1 INTRODUCCIÓN

El dimensionamiento y cálculo del tablero se efectúa en diferentes fases que se detallan a continuación. En este proceso, se emplea el programa informático SAP2000, a partir del modelo descrito en el punto anterior. Se consideran secciones del tablero equidistantes cada metro-

10.2 DEFINICIÓN DE LAS SECCIONES TRANSVERSALES.

Se define e introduce en el programa todas las secciones transversales tipo que componen el tablero. Para cada una de ellas se calculan las características mecánicas de las secciones brutas a flexión y torsión, según la EHE.

10.3 CÁLCULO DE ESFUERZOS EN SECCIONES, Y REACCIONES Y DEFORMACIONES EN APOYOS.

Definidos los anteriores datos, se pasa a calcular los esfuerzos en servicio que se generan en cada una de las secciones en las que se divide cada vano, debidos a la actuación del peso propio, de la carga muerta, del gradiente térmico vertical del tablero, de los descensos diferenciales de los apoyos y de las componentes verticales del tren de cargas de la sobrecarga de uso. Simultáneamente, se calculan las reacciones y giros en cada apoyo debido a las anteriores acciones, pues serán datos necesarios en el posterior cálculo de los aparatos de apoyo.

10.4 DEFINICIÓN DEL PRETENSADO DEL TABLERO.

A partir de las envolventes de esfuerzos anteriores, se realiza el dimensionamiento y encaje del pretensado del tablero. Los parámetros fundamentales considerados para el cálculo son los siguientes:

- El pretensado del tablero se compone 12 tendones de 24 cables de 0.5’’ de diámetro (100 mm^2/cable).
- Los cables se tesan desde ambos extremos del tablero. La tensión de tesado antes de penetración de cuñas se fijará en 1480 MPa.
- El diámetro de la vaina de cada cable es de 9 cm, y el coeficiente de rozamiento cable-vaina (μ) considerado en cálculos es de 0.21.
- Se adopta un valor de 5 mm para la penetración de cuñas en los anclajes y un valor de 0.006 rad/m para el coeficiente de desviaciones parásitas (K/μ).

Con todo ello, se hallan los coeficientes de retracción, fluencia y relajación iniciales y a tiempo infinito, así como las pérdidas instantáneas y diferidas del pretensado.

10.5 COMPROBACIÓN EN SERVICIO

Una vez definido el pretensado, se han de introducir diversas hipótesis de carga, combinando y ponderando las acciones antes descritas, a fin de verificar todos los supuestos recogidos en el Artículo 49 de la EHE (Estado Límite de Fisuración), que son los siguientes:

- Aparición de fisuras por compresión: Para evitarlas, bajo la combinación más desfavorable de acciones, se ha de comprobar que las tensiones máximas de compresión que se alcanzan son inferiores al 60% de la resistencia característica del hormigón en el momento de la carga.
- Estado límite de fisuración controlada: en virtud de lo dispuesto en el artículo 49.2.3. de la Instrucción EHE, en elementos de hormigón pretensado se ha de verificar que bajo la combinación de acciones frecuentes no se alcanza una apertura característica de fisura superior a 0.2 mm en ninguna fibra de la sección. Adicionalmente deberá comprobarse que las armaduras activas se encuentran en la zona comprimida de la sección, bajo la combinación de acciones cuasipermanentes.

A fin de comprobar los anteriores requisitos, se calcularon las tensiones para las diversas hipótesis de carga, pudiéndose verificar la adecuación de los resultados obtenidos a los requisitos antes mencionados.

Adicionalmente, se obtienen los valores de las flechas en los centros de los vanos y de las reacciones y giros en los apoyos en servicio para diferentes hipótesis de carga.

10.6 COMPROBACIÓN EN ROTURA POR FLEXIÓN

Llegado este punto, se está en condiciones de comprobar el estado límite de agotamiento por tensiones normales y de dimensionar la armadura pasiva longitudinal que junto con el pretensado determine que la estructura cumpla los requisitos exigidos en el artículo 42 de la EHE. Para ello, se hallan los momentos de diseño en las secciones pésimas, y se dimensiona la armadura pasiva necesaria para hacerles frente junto con el pretensado. En este caso, no resulta necesaria armadura pasiva longitudinal, al ser en todas las secciones analizadas los momentos últimos (sin armadura pasiva), superiores a los momentos de diseño.

10.7 CÁLCULO DE LA ARMADURA PASIVA DEL TABLERO

Además de la armadura pasiva longitudinal necesaria por E.L.U. de flexión, comentada en el punto anterior, es necesario dimensionar la armadura pasiva del tablero para resistir los siguientes esfuerzos:

- Flexión transversal en los voladizos de la estructura.

- Torsión. Debido a los efectos de la torsión, se debería disponer una armadura transversal y longitudinal a lo largo de todo el perímetro de torsión, conforme se indica en el artículo 45 de la EHE.

- Cortante. De dimensionan los cercos de cortante de las almas, para resistir los esfuerzos cortantes, de acuerdo con la formulación incluida en el artículo 44 de la EHE. En la determinación del cortante reducido, se tiene en cuenta la influencia del pretensado.

- Rasante. En los voladizos se debe disponer una armadura transversal que les permita resistir los esfuerzos rasantes. Dicha armadura se calcula según lo establecido en el artículo 44.2.3.5 de la EHE.

10.8 CÁLCULO DE REFUERZOS LOCALES

Por último, se han de dimensionar los refuerzos a disponer en zonas especialmente solicitadas, como son:

- Diafragmas o riostras de pilas.

- Diafragmas o riostras de estribos.

- Zonas de anclaje del pretensado.

- Zonas sobre apoyos.

La armadura en riostras de pila y estribos se lleva a cabo mediante un modelo de bielas y tirantes.

La armadura necesaria en las zonas de anclaje del pretensado y sobre apoyos se dimensiones conforme lo establecido en el artículo 60 de la EHE, correspondiente a cargas concentradas sobre macizos.

11 CÁLCULO DE LOS APARATOS DE APOYO Y JUNTAS DE CALZADA

Los aparatos de apoyo elastoméricos de neopreno han de satisfacer las exigencias que se establecen en la UNE EN-1337-3 (en servicio) y Eurocódigo 8 (en sismo), textos actualmente vigentes. El procedimiento seguido en el cálculo es el siguiente:

En primer lugar, teniendo en cuenta las reacciones en servicio y las deformaciones por efecto de las acciones lentas (reológicas y térmicas), se predimensionan unos aparatos de apoyo que verifiquen los requisitos de máxima distorsión admisible por acciones lentas y máxima y mínima presión vertical sobre el apoyo. Se modelizan dichos apoyos en el modelo de cálculo general y se obtienen las fuerzas máximas y mínimas horizontales y verticales, que dichos apoyos deben resistir para cada una de las combinaciones de cálculo consideradas en el punto 11 de la presente memoria.

Posteriormente, se comprueba si los aparatos de apoyo propuestos verifican las prescripciones establecidas en la normativa UNE EN 1337-7 para situaciones no sísmica, y el Eurocódigo 8 para situación sísmica. De cara a la modelización de los neoprenos, se tiene en consideración la indicación recogida en la UNE-EN 1337-3 relativas al módulo de deformación transversal del neopreno, con un único valor de 1000 kPa tanto para acciones rápidas de servicio como lentas. Asimismo, se realiza un doble cálculo de la acción sísmica teniendo en cuenta unos coeficientes de deformación transversal de G=1000 kPa y G=1500 kPa (según EC-8). Si los aparatos predimensionados no fuesen aptos, se dimensionarían unos distintos, volviendo a calcular el reparto de acciones y la aptitud de los nuevos apoyos, en un proceso iterativo.

En relación a las juntas de calzada, según los resultados del cálculo efectuado, se precisan juntas de calzada que posean un recorrido total (apertura + cierre) de al menos 160 mm en estribos, para de esa forma absorber los importantes movimientos que se producen en la situación de sismo frecuente.

En los neoprenos de estribo, no se cumple la condición de no deslizamiento. Es por ello, que deben disponerse anclados a estribo y tablero. También se disponen anclados los neoprenos de pila.

12 CÁLCULO DE PILAS

12.1 FUSTES

A partir del modelo general de cálculo, se obtienen los esfuerzos pésimos por combinación en las secciones más solicitadas de los fustes de pila (arranque). Dichos esfuerzos son procesados posteriormente para tener en cuenta los efectos de segundo orden (según artículo 43.5.1 de la EHE-08), así como la excentricidad accidental (acorde a 42.2.1 EHE-08). Con los esfuerzos finalmente obtenidos, se lleva a cabo el dimensionamiento de la armadura necesaria en el fuste, con el objeto de cumplir los siguientes requisitos:

- Cumplimiento del estado límite último de rotura por flexión simple o compuesta.
- Cumplimiento del estado límite último de rotura por esfuerzo cortante, con o sin torsión asociada.
- Zunchado de las cargas concentradas en el entorno de los apoyos-

12.2 PILOTES

Para la comprobación geotécnica de la longitud de los pilotes, inicialmente se ha obtenido del modelo de cálculo general los axiles máximos en cabeza de los mismos, tanto en combinación característica como en situación sísmica. Se ha comprobado inicialmente que, en todos los casos, los axiles obtenidos generan en una compresión en los pilotes compatible con los criterios de tope estructural habituales.

Con las resistencias por punta y por fuste estimadas en la información geotécnica, se obtienen las longitudes de pilotes necesarias para cumplir los siguientes requisitos:

- Hundimiento de los pilotes en situación no sísmica, considerando un coeficiente global de seguridad de 2 para el fuste y 3 para la punta.
- Hundimiento de los pilotes en situación sísmica, considerando una carga admisible un 20% superior a la de la situación no sísmica.

Además de los axiles, el modelo de cálculo general permite obtener los esfuerzos de flexión y cortante a lo largo de los pilotes. Con dichos esfuerzos se ha dimensionado la armadura a disponer en los mismos mediante, el cumplimiento de los siguientes requisitos:

- Cumplimiento del estado límite último de rotura por flexión compuesta.
- Cumplimiento del estado límite último de rotura por esfuerzo cortante.

12.3 ENCEPADO

A partir de los axiles máximos y mínimos en pilotes por combinación en ELU y sísmica, se ha dimensionado el armado de los encepados (cara inferior y cara superior), teniendo en cuenta los criterios establecidos en el punto 58.4.1.2.2 de la EHE-08.

13 CÁLCULO DE ESTRIBOS

13.1 PILOTES

Para la comprobación geotécnica de la longitud de los pilotes, inicialmente se ha obtenido del modelo de cálculo general los axiles máximos en cabeza de los mismos, tanto en combinación característica como en situación sísmica. Se ha comprobado inicialmente que, en todos los casos, los axiles obtenidos generan en una compresión en los pilotes compatible con los criterios de tope estructural habituales.

Con las resistencias por punta y por fuste estimadas en la información geotécnica, se obtienen las longitudes de pilotes necesarias para cumplir los siguientes requisitos:

- Hundimiento de los pilotes en situación no sísmica, considerando un coeficiente global de seguridad de 2 para el fuste y 3 para la punta.
- Hundimiento de los pilotes en situación sísmica, considerando una carga admisible un 20% superior a la de la situación no sísmica.

Además de los axiles, el modelo de cálculo general permite obtener los esfuerzos de flexión y cortante a lo largo de los pilotes. Con dichos esfuerzos se ha dimensionado la armadura a disponer en los mismos mediante, el cumplimiento de los siguientes requisitos:

- Cumplimiento del estado límite último de rotura por flexión compuesta.
- Cumplimiento del estado límite último de rotura por esfuerzo cortante.

13.2 ENCEPADOS

A partir de los axiles máximos y mínimos en pilotes por combinación en ELU y sísmica, se ha dimensionado el armado de los encepados (cara inferior y cara superior), teniendo en cuenta los criterios establecidos en el punto 58.4.1.2.2 de la EHE-08.

13.3 FUSTES

A partir del modelo general de cálculo, se obtienen los esfuerzos pésimos por combinación en las secciones más solicitadas (las extremas) de los fustes de estribo (arranque). Dada la poca esbeltez de los mismos, así como su baja solicitación frente a esfuerzos axiles, no resulta necesario tener en cuenta en este caso los efectos de segundo orden. Con los esfuerzos finalmente obtenidos, se lleva a cabo el dimensionamiento de la armadura necesaria en el fuste, con el objeto de cumplir los siguientes requisitos:

- Cumplimiento del estado límite último de rotura por flexión simple o compuesta.
- Cumplimiento del estado límite último de rotura por esfuerzo cortante, con o sin torsión asociada.

13.4 VIGA CARGADERO

Nuevamente a partir del modelo de cálculo general, se obtienen los esfuerzos de diseño en la viga cargadero de estribos. Con dicha armadura se dimensiona el armado necesario para hacer frente a los siguientes requisitos:

- Cumplimiento del estado límite último de rotura por flexión compuesta.
- Cumplimiento del estado límite último de rotura por esfuerzo cortante.
- Cumplimiento del estado límite de fisuración. En este caso no obstante, al encontrarse en una zona de actividad sísmica muy elevada, esta comprobación no resulta dimensionante, por estar toda la armadura condicionada por la situación accidental de sismo.

El armado del espaldón del estribo, así como de las aletas se lleva a cabo mediante modelos simplificados del lado de la seguridad.

Finalmente se dimensiona la armadura concentrada a disponer bajo los apoyos, acorde al artículo 61 de la EHE-08.

14 CÁLCULO DE PRUEBA DE CARGA

14.1 DESCRIPCIÓN DE LA PRUEBA DE CARGA.

Se define como prueba de carga el conjunto de operaciones de control, cuya realización es preceptiva en puentes y pasarelas antes de su apertura al tráfico, a fin de comprobar la adecuada concepción, la estabilidad y el buen comportamiento de la obra.

Con la realización de la prueba de carga se pretende la comprobación de la estructura antes de su puesta en servicio, y la verificación de que el puente real se comporta de acuerdo con lo previsto en los cálculos. Para ello se ejecutarán las preceptivas pruebas de carga de la estructura de acuerdo con la normativa vigente.

En este caso, la prueba de carga será de tipo estático, es decir, se aplicarán unas cargas en posiciones predeterminadas dentro de la estructura, midiéndose las deformaciones en estado de reposo. Dadas las características de esta estructura (luz, material y tipología) no es necesaria la realización de pruebas dinámicas.

Con la prueba de carga se pretenden ensayar las dos nuevas vigas de la ampliación y las dos vigas contiguas del tablero existente, sobre la que se produce una modificación de las solicitaciones al eliminarse la acera y ser objeto ahora de paso de vehículos sobre las vigas.

14.2 CARGAS DE ENSAYO.

En ningún caso las acciones del tren de cargas a utilizar y las solicitaciones a que aquéllas den lugar, podrán ser más desfavorables que el 70% de las del tren de cargas de la IAP, estimándose como suficiente si tales esfuerzos oscilan alrededor del 55-60%. Igualmente es preciso comprobar que los neoprenos de los estribos no se encuentren traccionados bajo las acciones de peso propio y tren de cargas de la puesta en carga, lo cual no sucederá en esta prueba.

El tren de cargas está formado por camiones del tipo definido en las Recomendaciones sobre Pruebas de Carga del Ministerio de Fomento, de 4 ejes con 38 Tn de peso total, debidamente tarado hasta que el total del peso del camión corresponda con lo establecido en la norma. Serán necesarios un máximo de 4 camiones de este tipo para la hipótesis de carga prevista, cuya colocación en el tablero será la definida en los planos correspondientes.

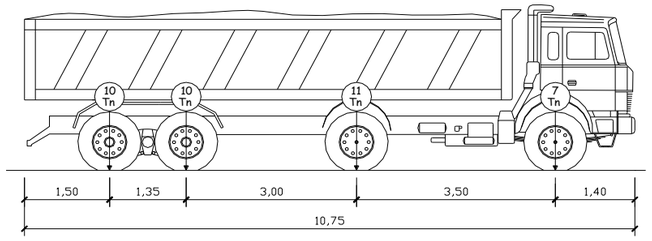

Camión tipo de 4 ejes y 38 toneladas de peso

Para la obtención de las flechas teóricas, se ha utilizado el modelo de emparrillado descrito en el cálculo del tablero. Las características de los materiales y de los modelos de discretización utilizados están definidas en el último apartado de este documento, en forma de listados de cálculo.

Se consideran necesarias tres hipótesis de carga. Los esfuerzos logrados se recogen en los listados recogidos al final del presente documento.

14.3 MEDICIONES MÍNIMAS A REALIZAR.

Para el estado de carga proyectado, se medirán las deformaciones verticales en los puntos de control establecidos en los planos, que coinciden con las secciones de máxima flecha de los vanos.

Los pesos serán correspondientes a camiones de 38 toneladas cada uno, y se colocarán en la posición de carga indicada en los planos, manteniéndose en ella 15 minutos, descargando después el tablero y dejando otros 15 minutos antes proceder a la última medida. Se realizarán medidas:

1) Antes de empezar la prueba de carga.
2) Antes de colocar los pesos en cada hipótesis de carga.
3) A los 15 minutos de colocados los pesos en cada hipótesis de carga.
4) 15 minutos después de retirados los pesos en cada hipótesis de carga.
5) A la terminación de la prueba de carga.

6) Al día siguiente y a la misma hora en que se inició la medición de flechas, caso de que la recuperación de la flecha no fuese admisible en principio.

14.4 APARATOS DE MEDIDA.

Se utilizarán los siguientes aparatos de medida:

- Para materializar los puntos de medida se utilizarán tiros de spit, unidos a los aparatos de medida, situados en el terreno natural, por un hilo de acero a tensión constante.

- Los aparatos de medida serán flexímetros, con un rango mínimo de 10 cm y una precisión no menor de 0.01 mm (una centésima de mm). La flecha máxima teórica a medir es de 12.7 mm, mientras que la mínima es tan pequeña como pueda ser la deformación conjunta estribo-neoprenos.

- Termohigrómetros digitales con precisión de 0.5ºC en temperatura y 1% en humedad.

- Alternativamente a los flexímetros, podrá plantearse la medición con topografía de alta precisión, que garantice una precisión no menor de 0.1 mm.

14.5 PREPARACIÓN Y DESARROLLO DE LA PRUEBA.

a) Cálculo.

Con los datos de proyecto y de obra (características del hormigón, espesores, cargas permanentes, etc.), y con los tipos de camiones y cargas elegidos, se calculan las flechas en las hipótesis de carga, en los puntos señalados en los planos correspondientes.

Para calcular las flechas teóricas se presupone un módulo de elasticidad del hormigón del tablero de E_{HP-40} = 30891 MPa

Se ha de tener en cuenta en cualquier caso que el módulo de elasticidad real puede variar debido a múltiples factores como la edad y la historia de cargas así como las condiciones ambientales, como también las propiedades reales de la losa fisurada pueden diferir de las teóricas consideradas en el cálculo. Asimismo, las flechas medidas diferirán en una determinada cantidad de las teóricas en función de la eficiencia del sistema de conexión entre las losas y las características geométricas reales de las vigas existentes, de las que sólo se ha podido tomar el canto.

b) Estados de carga.

Se ha considerado un único estado de carga, con 2 alineaciones de 2 camiones situados en torno a centro luz del vano.

c) Marcaje de ejes sobre el tablero.

Se marcarán las posiciones exactas que han de tener las cargas durante la prueba, posicionando los ejes longitudinales y transversales de los camiones.

La geometría de los camiones podrá diferir ligeramente de la del camión standard de las Recomendaciones sobre Pruebas de Carga del Ministerio de Fomento.

d) Pesaje de camiones.

Se pesarán cada uno de los ejes de los camiones, comprobando su coincidencia aproximada con las teóricas de la prueba (se establece una tolerancia admisible del 5%). Se anotarán los pesos reales para la posterior corrección de los resultados teóricos, si fuese menester.

e) Observación previa del tablero.

Antes de comenzar la prueba se recorrerán detenidamente las estructuras, anotando todas las anomalías que se observen en aparatos de apoyo, juntas, tablero y en general, en toda la estructura, observando concienzudamente las fisuras en caso de que existan, midiendo su tamaño con lupas y marcando los puntos en donde se hagan estas medidas, para realizar mediciones posteriores en cada escalón de carga.

A continuación, y para cada una de las hipótesis de carga a realizar, se realizarán las siguientes operaciones:

f) Medición de la temperatura ambiente y de la humedad relativa.

g) Medición de flechas con el tablero descargado.

h) Introducción de las cargas.

La introducción de la carga en los puentes deberá hacerse de forma escalonada. Se colocará primero un camión en su posición exacta antes de entrar o colocar el siguiente. Durante esta operación se observarán en todo momento los aparatos de medida, anotando los resultados más importantes, aunque no figurarán en el informe, ni tendrán valor para deducir el comportamiento de la estructura mientras se actúe con cargas parciales.

i) Medición de flechas con el vano cargado.

Se tomarán lecturas de las flechas unos quince minutos después de haber concluido el posicionamiento de los camiones, cuando ya no exista ninguna vibración, y estando los motores de los camiones apagados.

j) Medición de flechas con el tablero descargado.

Una vez finalizada cada hipótesis y transcurrido un cuarto de hora después de haberse retirado todos los camiones, se procederá a una última lectura de los aparatos de medida para comprobar las flechas remanentes que puedan quedar en el tablero.

k) Inspección visual ulterior.

Al terminar la prueba se realizará una última inspección visual, prestando especial interés a los puntos donde se hubiesen observado anomalías, para compararlas con las observaciones iniciales.

14.6 RESULTADOS Y TOLERANCIAS.

Las deformaciones, una vez estabilizadas, no deben diferir en más del 10% por exceso o el 40% por defecto de las calculadas. En caso contrario se repetirá el proceso de carga y las medidas correspondientes.

La deformación remanente al descargar el tablero no debe superar el 15% de la producida por la sobrecarga total aplicada. En caso contrario se volverá a aplicar toda la sobrecarga, debiendo ser la nueva deformación, medida 15 minutos después de retirar la sobrecarga, inferior al 33% de la deformación remanente anotada tras la primera descarga.

Si las deformaciones exceden de los límites tolerados en más del 50%, no se considerará aceptable el tramo para su uso. En este caso se revisarán cuidadosamente el proyecto y la fidelidad de su ejecución y se decidirá a la vista de propuesta razonada si procede poner el tramo provisionalmente en servicio. En caso afirmativo, transcurrido un año, si la estructura no ha sufrido deformaciones o averías de alguna importancia, se repetirán todas las pruebas realizadas anteriormente y se decidirá, también a la vista de otra propuesta razonada, si se acepta definitivamente el tramo o si es preciso sustituirlo o reforzarlo.

Las flechas calculadas en los puntos de medida se pueden observar en los planos correspondientes. Se anotarán siempre los siguientes datos:

- Hora exacta de las sucesivas operaciones efectuadas.
- Lista y matrícula de los vehículos utilizados, y sus pesos por ejes.
- Posiciones de los vehículos en cada escalón de carga.
- Resultados de cada medición.
- Comprobación de flechas calculadas y medidas.
- Informes que permitan el fácil reencuentro de las referencias de nivelación.
- Cualquier otro dato que pueda parecer útil, como vibraciones, etc.

14.7 INFORME DE PRUEBA DE CARGA.

Una vez terminada la prueba de carga se hará un informe que constará como mínimo de:

- Fecha, hora de inicio y fin y asistentes a la prueba.
- Referencia al proyecto de la estructura y de la prueba de carga (clave, fecha, autor, etc.).
- Descripción de la obra y de su estado previo a la prueba.
- Descripción detallada de los vehículos utilizados y los distintos estados de carga.
- Descripción de las magnitudes, equipo instrumental de toma de datos y número y situación de los puntos de medida.
- Información sobre el desarrollo de la prueba (hora de comienzo de cada estado de carga, tiempo transcurrido entre carga y descarga, número de escalones, etc.).
- Registros de las magnitudes medidas durante la prueba.

- Comparación con los valores teóricos previstos y valoración del cumplimiento de los criterios de aceptación.
- Cuestiones de interés observadas en las inspecciones de la obra antes, durante o después de la prueba.
- Varios: documentación fotográfica, condiciones meteorológicas, puntos de referencia para la nivelación si los hubiera, incidencias, etc.

El informe estará redactado y firmado por el ingeniero Director de la prueba. Si, por indicación del director de las Obras, la valoración del cumplimiento de los criterios de aceptación fuera efectuada por el Autor del Proyecto, éste será quien redacte y firme dicha parte del informe.

14.8 ACTA DE PRUEBA DE CARGA.

Con base en el informe, se redactará el Acta de la prueba, documento de carácter oficial que contiene una descripción resumida de los distintos aspectos de la prueba, mencionados en el apartado anterior, y una referencia expresa al cumplimiento de los criterios de aceptación.

El acta estará firmada al menos por el Director de la Obra, el Director de la prueba y el representante del Constructor.

Alejandro Castillo Linares
Ingeniero de Caminos
Col.nº: 10.780
ACL Estructuras

CÁLCULOS JUSTIFICATIVOS

c/ COLUMELA nº15, C.P. 11004 CÁDIZ. Tlf: 956222763 Fax: 956210106
e-mail: acl@acl-estructuras.com http://www.acl-estructuras.com

DEFINICIÓN DEL MODELO DE CÁLCULO GENERAL

c/ COLUMELA nº15, C.P. 11004 CÁDIZ. Tlf: 956222763 Fax: 956210106
e-mail: acl@acl-estructuras.com http://www.acl-estructuras.com

CARGAS EN ESTRUCTURA

LOAD CASE	DESCRIPCIÓN	VALOR	UNIDADES
DEAD	PESO PROPIO ESTRUCTURAL. Incluye como cargas exteriores, el peso de espaldon y aletas en estribos	25	kN/m3
TESADO	ACCIÓN DEL PRETENSADO A TIEMPO INFINITO, INCLUYENDO TODAS LAS PÉRDIDAS INSTANTÁNEAS Y DIFERIDAS	SAP	
PAVIMENTO	SE CONSIDERA UN ESPESOR DE 5 CM (23 kN/m3) Y UNA ANCHURA DE 8 METROS. SE INCREMENTA EL PESO UN 50% ACORDE A IAP	13.8	kN/ml
BARRERAS	SE ADOPTA UN PESO DE 7 kN/ml EN CADA BORDE	14	kN/ml
PTIERR_CIM	PESO DE LAS TIERRAS GRAVITANDO SOBRE LOS CIMIENTOS. DE CONSIDERA UN PESO ESPECÍFICO DE 18 kN/m3. ALTURA DE TIERRAS EN PILA= 1.65 . ALTURA DE TIERRAS EN ESTRIBOS = 8.25 METROS	VARIOS	kN y m
SC_CARRIL_1	SOBRECARGA DISTRIBUIDA (9 kN/m2) APLICADA SOBRE CARRIL VIRTUAL 1	VARIAS	kN y m
SC_CARRIL_2	SOBRECARGA DISTRIBUIDA (2.5 kN/m2) APLICADA SOBRE CARRIL VIRTUAL 2	VARIAS	kN y m
SC_CARRIL_REM	SOBRECARGA DISTRIBUIDA (2.5 kN/m2) APLICADA SOBRE CARRIL REMANENTE DE 2 METROS DE ANCHURA	VARIAS	kN y m
VP_CARRIL_1	VEHÍCULO PESADO (2X300 kN) APLICADO SOBRE CARRIL VIRTUAL 1		
VP_CARRIL_2	VEHÍCULO PESADO (2X200 kN) APLICADO SOBRE CARRIL VIRTUAL 2		
RETRYFLU	DEFORMACIÓN IMPUESTA POR RETRACCIÓN Y FLUENCIA	7.17E-04	m/m
GRAD_TERM_1	INCREMENTO TÉRMICO DE 15ºc DE LA FIBRA SUPERIOR RESPECTO DE LA FIBRA INFERIOR	9.09	ºC/m
GRAD_TERM_2	DECREMENTO TÉRMIC8 DE 8ºc DE LA FIBRA SUPERIOR RESPECTO DE LA FIBRA INFERIOR	-4.85	ºC/m
TEMP_UNIF	SE CONSIDERA UN DECREMENTO TÉRMICO DE -15.8ºC RESPECTO DE LA TEMPERATURA DE MONTAJE (SEGÚN CÁLCULO IAP)	-15.80	ºC
FRENADO_1	FUERZA DE FRENADO DE 7.92 kN/ml EN SENTIDO DE X+	7.92	kN/ml
FRENADO_2	FUERZA DE FRENADO DE 7.92 kN/ml EN SENTIDO DE X-	-7.92	kN/ml
VIENTO	VIENTO TRANSVERSAL EN TABLERO Y PILAS (6.29 kN/ml tablero y 2.3 kN/ml pila)	6.29	kN/ml
E_TIERRAS	SE CONSIDERA EL EMPUJE SOBRE LA VIGA CARGADERO DE LOS ESTRIBOS. ALTURA 3.32 m. PESO ESPECÍFICO = 18 kN/m3. COEF. EMPUJE =0.3333. EXCENTRICIDAD = 0.41 m	33.07	kN/ml
E_SC	SE CONSIDERA EL EMPUJE SOBRE LA VIGA CARGADERO DE LOS ESTRIBOS. ALTURA 3.32 m. SOBRECARGA=10 kPa. COEF. EMPUJE =0.3333. EXCENTRICIDAD = 0.96 m	11.06	kN/ml

PROYECTO: AUTOVÍA ALMANZORA (A-334). CUCADOR- ENLACE AL-7106
ESTRUCTURA: E1 PASO SUPERIOR PK 0+044.50
05/06/2017

LOAD CASE	DESCRIPCIÓN	VALOR	UNIDADES
SISMO_X	ACCIÓN SISMICA EN DIRECCIÓN X	ESPECTRO	
SISMO_Y	ACCIÓN SISMICA EN DIRECCIÓN Y	ESPECTRO	
SISMO_Z	ACCIÓN SISMICA EN DIRECCIÓN Z	ESPECTRO	

ENVOLVENTES PREVIAS

GRAD_TERM	ENVOLVENTE DE LOS CASOS GRAD_TERM_1 Y GRAD_TERM_2
FRENADO	ENVOLVENTE DE LOS CASOS FRENADO_1 Y FRENADO_2

HIPOTESIS DE COMBINACIÓN EN ELS

	CUASIP	FREC_01	FREC_02	CARACT_01	CARACT_02
DEAD	1.00	1.00	1.00	1.00	1.00
TESADO	0.90	0.90	1.10	0.90	1.10
PAVIMENTO	1.00	1.00	1.00	1.00	1.00
BARRERAS	1.00	1.00	1.00	1.00	1.00
PTIERR_CIM	1.00	1.00	1.00	1.00	1.00
SC_CARRIL_1	0.00	0.40	0.40	1.00	1.00
SC_CARRIL_2	0.00	0.40	0.40	1.00	1.00
SC_CARRIL_REM	0.00	0.40	0.40	1.00	1.00
VP_CARRIL_1	0.00	0.75	0.75	1.00	1.00
VP_CARRIL_2	0.00	0.75	0.75	1.00	1.00
RETRYFLU	1.00	1.00	1.00	1.00	1.00
GRAD_TERM	0.50	0.50	0.50	0.60	0.60
TEMP_UNIF	0.50	0.50	0.50	0.60	0.60
FRENADO	0.00	0.00	0.00	1.00	1.00
VIENTO	0.00	0.00	0.00	0.60	0.60
E_TIERRAS	1.00	1.00	1.00	1.00	1.00
E_SC	0.00	0.00	0.00	1.00	1.00
SISMO_X	0.00	0.00	0.00	0.00	0.00
SISMO_Y	0.00	0.00	0.00	0.00	0.00
SISMO_Z	0.00	0.00	0.00	0.00	0.00

HIPOTESIS DE COMBINACIÓN EN ELU

	ELU_01	ELU_02	ELU_SIS_X	ELU_SIS_Y	ELU_SIS_Z
DEAD	1.35	1.00	1.00	1.00	1.00
TESADO	1.00	1.00	1.00	1.00	1.00
PAVIMENTO	1.35	0.67	1.00	1.00	1.00
BARRERAS	1.35	1.00	1.00	1.00	1.00
PTIERR_CIM	1.35	1.00	1.00	1.00	1.00
SC_CARRIL_1	1.35	1.35	0.20	0.20	0.20
SC_CARRIL_2	1.35	1.35	0.20	0.20	0.20
SC_CARRIL_REM	1.35	1.35	0.20	0.20	0.20
VP_CARRIL_1	1.35	1.35	0.00	0.00	0.00
VP_CARRIL_2	1.35	1.35	0.00	0.00	0.00
RETRYFLU	1.35	1.35	1.00	1.00	1.00
GRAD_TERM	0.90	0.90	0.00	0.00	0.00
TEMP_UNIF	0.90	0.90	0.00	0.00	0.00
FRENADO	1.35	1.35	0.00	0.00	0.00
VIENTO	0.90	0.90	0.00	0.00	0.00
E_TIERRAS	1.50	1.50	1.00	1.00	1.00
E_SC	1.50	1.50	0.00	0.00	0.00
SISMO_X	0.00	0.00	1.00	0.30	0.30
SISMO_Y	0.00	0.00	0.30	1.00	0.30
SISMO_Z	0.00	0.00	0.30	0.30	1.00

CÁLCULO DE LAS PERDIDAS DE PRETENSADO POR ACORTAMIENTO, RETRACCIÓN, FLUENCIA Y RELAJACIÓN
NORMA EHE

Edad del hormigón en el momento de evaluación	10000	días
Resistencia característica del hormigón	40	N/mm2

RETRACCIÓN

Edad del hormigón al comienzo de la retracción	2	días
εs	0.00037	
Humedad	65	%
βhr	-1.12433125	
εcso	-0.000416003	
βs(t-ts)	0.638787199	
Area de la sección transv.	6.5716	m2
Perímetro con atmósfera	20.417	m
e	643.7380614	
RETRACCIÓN εcs(t,ts)	**-0.000265737**	

FLUENCIA

Edad del hormigón al comienzo de la fluencia	7	días
φhr	1.409454658	
Humedad	65	%
βfcm	2.424871131	
$\beta$to	0.634609108	
βh	1226.635258	
βctto	0.965862144	
Area de la sección transv.	6.5716	m2
Perímetro con atmósfera	20.417	m
e	643.7380614	
COEF. FLUENCIA φ(t,to)	**2.094889971**	

MÓDULO DE DEFORMACIÓN DEL HORMIGÓN	30891	mpA
MODULO DE DEFORMACIÓN DEL ACERO ACTIVO	190000	mpA
FUERZA DE TESADO A TIEMPO 0	41	MN
PERDIDA POR RETRACCIÓN	50	MPa
PÉRDIDA POR ACORTAMIENTO ELÁSTICO	39	MPa
PÉRDIDA POR FLUENCIA	81	MPa
PERDIDA POR RELAJACIÓN	86	MPa

ESPECTRO DE RESPUESTA (NCSP-07)

PARÁMETROS SISMICOS

Datos		Cálculos Intermedios	**Sismo Ultimo**	**Sismo Frecuente**
Aceleración básica (ab/g)	0.14	Ta	**0.139**	**0.070**
Factor de importancia (γ1)	1	Tb	**0.556**	**0.278**
Coeficiente de suelo (C)	1.39	Tc	**3.390**	**1.695**
Coefciente de contribución (K)	1	Coeficiente γ1	**1.000**	**1.000**
Datos para sismo último		Coeficiente γ2	**1.000**	**0.525**
Amortiguamiento (%)	5	Coeficiente de riesgo ρ	**1.000**	**0.525**
Coeficiente de comportamiento		Coeficiente de Amplificación (S)	**1.097**	**2.234**
por ductilidad (q)	1	Coeficiente v	**1.000**	**1.227**
Datos para sismo frecuente				
Amortiguamiento (%)	3			

Aceleración de Cálculo (ab/g)	**0.1536**	**----->**	**1.507 m/s2**	**SISMO ÚLTIMO DE CÁLCULO (T=500 AÑOS)**
Aceleración de Cálculo (ab/g)	**0.0807**	**----->**	**0.791 m/s2**	**SISMO FRECUENTE (T=100 AÑOS)**

Valores del espectro de Respuesta (Sismo Último de Calculo)

T	α(T)	
0.000	1.000	
0.035	1.375	
0.070	1.750	
0.104	2.125	
0.139	2.500	Ta
0.556	2.500	Tb
0.871	1.596	
1.186	1.172	
1.501	0.926	
1.816	0.766	
2.130	0.652	
2.445	0.568	
2.760	0.504	
3.075	0.452	
3.390	0.410	Tc
4.057	0.286	
4.723	0.211	
5.390	0.162	

Valores del espectro de Respuesta (Sismo Frecuente)

T	α(T)	
0.000	1.000	
0.017	1.517	
0.035	2.033	
0.052	2.550	
0.070	3.067	Ta
0.278	3.067	Tb
0.435	1.958	
0.593	1.438	
0.750	1.136	
0.908	0.939	
1.065	0.800	
1.223	0.697	
1.380	0.618	
1.538	0.554	
1.695	0.503	Tc
2.695	0.199	
3.695	0.106	
4.695	0.066	

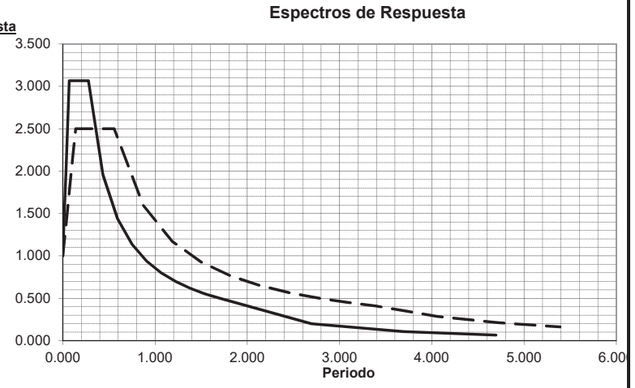

ACCIONES HORIZONTALES EN PUENTES

OBRA: AUTOVÍA ALMANZORA. TRAMO: CUCADOR-ENLACE AL-7106

ESTRUCTURA: E-1 actualizado

DATOS PARA CÁLCULO SÍSMICO (NCSP-07)

Aceleración básica	0.14	g		
Coeficiente de riesgo	1	ACORDE CON IAP-11		
Contribución Azores K	1			
Tipo de suelo (1,2, 3 o 4)	ENTRE 2 Y 3			
Coeficiente C	1.39			
Longitud estructura entre apoyos extremos	68	m		
Amortiguamiento	5%			
Coeficiente v	1			
Factor de comportamiento q	1			
Coeficiente de amplificacion del terreno S	1.097			
Aceleración de cálculo	0.154	g	--->	1.5052 m/sg2
Ta	0.139			
Tb	0.556			

Definición del espectro elástico de respuesta

Valores de T				
	T <	0.139	12.36	12.08
0.139	<T<	0.56	2.50	2.50
0.56	<T		1.32	1.35

Periodo de la estructura T	1.05	sg-Long	1.03	sg-Trans
Ordenada espectral a(T)	1.32		1.35	

DATOS PARA CÁLCULO DE FUERZA DE VIENTO (IAP-11)

1.- Velocidad de cálculo

vb	26.00	m/s
Cprob :	1.04	
vb(T)	27.04	m/s
z (m) :	7.00	
Entorno :	II	
kr :	0.19	
zo (m) :	0.05	
zmin (m) :	2.00	
Cr :	0.94	
Co:	1.00	
vm(z)	25.39	m/s
Presión de vb (pres_vb)	0.0466	ton/m2
ce(z)	2.13	
ancho tablero (a_tab)	9.30	m
heq	3.70	m
cf_x	1.75	
Aref	3.70	m2/ml
F (TN/m) :	**0.641**	Empuje horizontal del viento sin SC (sin mayorar)
	0.641	Empuje horizontal del viento con SC (sin mayorar)

DATOS PARA CÁLCULO DE DEFORMACIONES LENTAS (TÉRMICAS + REOLÓGICAS)

Edad del hormigón al comienzo de la retracción	2	días
Edad del hormigón al comienzo de la fluencia	7	días
Humedad ambiente	65	%
Retracción	-3.52E-04	
Coef. de fluencia	2.147527321	
F.Pretensado final del tablero	3445.5	tn
Area del tablero	6.5716	m2
Perímetro del tablero con atmósfera	20.417	m
Resistencia característica del hormigón	400	Kp/cm2
Módulo de elasticidad del tablero	3.09E+05	Kp/cm2
Fluencia	3.65E-04	
DEFORMACIÓN RETRACCIÓN Y FLUENCIA	7.17E-04	
Se incluye acortamiento elastico? (1=si; 0=no)	0	
DEFORMACIÓN ELASTICA INSTANTANEA	1.38E-04	

Tmin,p	-8.80	ºC
Tmax,p	48.30	ºC
AT,min	8.00	ºC
AT,max	2.00	ºC
Te,min	-0.80	ºC
Te,max	50.30	ºC
AT,contracción	**15.80**	**ºC**
AT,dilatación	**35.30**	**ºC**

DEFORMACIÓN TÉRMICA (contracción)	-1.58E-04	
TOTAL DEFORMACIONES LENTAS	-8.75E-04	
Coeficiente a aplicar en situación sísmica (sin accion térmica)		0.82
Coeficiente de mayoración promediado acciones lentas (persistente)		1.38

DATOS PARA CÁLCULO DE FRENADO

Longitud de tablero	69.00	m.	
Fuerza total de frenado	0.807	ton/ml	7.917391304
FUERZA DE FRENADO TOTAL EN PUENTE	55.69	Tn	

DATOS PARA CÁLCULO DE FUERZA CENTRIFUGA

Radio del eje del puente	9999999999999990.00	m
Masa de la sobrecarga	100.00	ton
FUERZA CENTRIFUGA EN ZONA CURVA	0.00	TN
FUERZA DE DERRAPE	0.00	TN
nº de vanos	1.00	
FUERZA TOTAL POR ML (APROX)	0.00	TN/ML

ESTRUCTURA E01
PILOTES: RIGIDEZ Y PUNTO DE INFLEXIÓN
08/06/2017

CALCULO DE ESFUERZOS EN PILOTES SOMETIDOS A ACCIONES HORIZONTALES

PILOTE EMPOTRADO AL GIRO EN CABEZA

DATOS DE ENTRADA

Características del Pilote

Longitud del pilote 16 metros

Diámetro del pilote 1 metro

E del hormigón 3.00E+06 t/m2

Fuerzas en Cabeza del Pilote

Fx **12.000 ton**

Rotura del terreno: Coeficiente de Seguridad (Tabla)	
Hipotesis	C.Seguridad
Casi-Permanente	3
Característica	2.6
Accidental	2.2
ELU Persistente	2

Ix= 4.91E-02 m4

Datos para el pasivo (Articulo 5.12 Guia Cimentaciones)

Densidad efectiva	1.8	ton/m3
Angulo roz interno (º)	28	
Kp	2.77	
Cohesion de cálculo	0.00	ton/m2
Coeficiente minoracion pasivo	2	(Tabla)
Profundidad cabeza pilote	1.4	m

LEYES DE BALASTO HORIZONTAL EN EL TERRENO (Según geotecnia de proyecto original)

	Prof.Inic	Prof.final	K inic (t/m3)	K final (t/m3)
ESTRATO 1	0	3	0	1245
ESTRATO 2	3	6	1245	2490
ESTRATO 3	6	9	2490	3735
ESTRATO 4	9	16	11700	20800
ESTRATO 5	16	20	20800	26000
ESTRATO 6	20	16	26000	20800

Longitud rebanada 0.11

RIGIDEZ ANTE ACCIONES HORIZONTALES 4699.22 T/ML

RESULTADOS NODO A NODO

NODO	PROF.	K(t/m)	Un (m)	Qn (rad)	Vx (ton)	M (t*m)	Reaccion muelle (ton)	Pasivo (ton)	Coef
151	0.00	0.00	0.0026	0.00000	12.00	-35.99	0.000	1.117	1.00
150	0.11	4.72	0.0026	-0.00003	11.99	-34.71	0.012	1.202	0.01
149	0.21	9.44	0.0025	-0.00005	11.96	-33.43	0.024	1.287	0.02
148	0.32	14.17	0.0025	-0.00007	11.93	-32.16	0.036	1.372	0.03
147	0.43	18.89	0.0025	-0.00010	11.88	-30.88	0.048	1.457	0.03
146	0.53	23.61	0.0025	-0.00012	11.82	-29.62	0.060	1.542	0.04
145	0.64	28.33	0.0025	-0.00014	11.75	-28.36	0.071	1.627	0.04
144	0.75	33.05	0.0025	-0.00016	11.67	-27.10	0.082	1.712	0.05
143	0.85	37.77	0.0025	-0.00018	11.57	-25.86	0.093	1.798	0.05
142	0.96	42.50	0.0025	-0.00020	11.47	-24.62	0.104	1.883	0.06
141	1.07	47.22	0.0024	-0.00021	11.35	-23.40	0.115	1.968	0.06
140	1.17	51.94	0.0024	-0.00023	11.23	-22.19	0.125	2.053	0.06
139	1.28	56.66	0.0024	-0.00025	11.09	-20.99	0.135	2.138	0.06
138	1.39	61.38	0.0024	-0.00026	10.95	-19.81	0.145	2.223	0.07
137	1.49	66.10	0.0023	-0.00028	10.80	-18.64	0.154	2.308	0.07
136	1.60	70.83	0.0023	-0.00029	10.63	-17.49	0.163	2.393	0.07
135	1.71	75.55	0.0023	-0.00030	10.46	-16.35	0.171	2.478	0.07
134	1.81	80.27	0.0022	-0.00031	10.28	-15.24	0.179	2.563	0.07
133	1.92	84.99	0.0022	-0.00032	10.10	-14.14	0.187	2.648	0.07
132	2.03	89.71	0.0022	-0.00033	9.90	-13.06	0.194	2.733	0.07
131	2.13	94.44	0.0021	-0.00034	9.70	-12.01	0.201	2.819	0.07
130	2.24	99.16	0.0021	-0.00035	9.49	-10.97	0.207	2.904	0.07
129	2.35	103.88	0.0021	-0.00036	9.28	-9.96	0.213	2.989	0.07
128	2.45	108.60	0.0020	-0.00036	9.06	-8.97	0.219	3.074	0.07
127	2.56	113.32	0.0020	-0.00037	8.84	-8.00	0.224	3.159	0.07
126	2.67	118.04	0.0019	-0.00038	8.61	-7.06	0.228	3.244	0.07
125	2.77	122.77	0.0019	-0.00038	8.38	-6.14	0.233	3.329	0.07
124	2.88	127.49	0.0019	-0.00039	8.14	-5.25	0.236	3.414	0.07
123	2.99	132.21	0.0018	-0.00039	7.90	-4.38	0.240	3.499	0.07
122	3.09	136.93	0.0018	-0.00039	7.66	-3.54	0.242	3.584	0.07
121	3.20	141.65	0.0017	-0.00039	7.42	-2.72	0.245	3.669	0.07
120	3.31	146.38	0.0017	-0.00040	7.17	-1.93	0.247	3.755	0.07
119	3.41	151.10	0.0016	-0.00040	6.92	-1.16	0.248	3.840	0.06
118	3.52	155.82	0.0016	-0.00040	6.67	-0.43	0.250	3.925	0.06
117	3.63	160.54	0.0016	-0.00040	6.42	0.28	0.250	4.010	0.06
116	3.73	165.26	0.0015	-0.00040	6.17	0.97	0.251	4.095	0.06
115	3.84	169.98	0.0015	-0.00040	5.92	1.63	0.251	4.180	0.06
114	3.95	174.71	0.0014	-0.00039	5.67	2.26	0.250	4.265	0.06
113	4.05	179.43	0.0014	-0.00039	5.42	2.86	0.249	4.350	0.06
112	4.16	184.15	0.0013	-0.00039	5.17	3.44	0.248	4.435	0.06
111	4.27	188.87	0.0013	-0.00039	4.92	3.99	0.247	4.520	0.05
110	4.37	193.59	0.0013	-0.00038	4.68	4.52	0.245	4.605	0.05
109	4.48	198.31	0.0012	-0.00038	4.44	5.02	0.243	4.691	0.05
108	4.59	203.04	0.0012	-0.00038	4.20	5.49	0.241	4.776	0.05
107	4.69	207.76	0.0011	-0.00037	3.96	5.94	0.238	4.861	0.05
106	4.80	212.48	0.0011	-0.00037	3.72	6.36	0.235	4.946	0.05
105	4.91	217.20	0.0011	-0.00036	3.49	6.76	0.232	5.031	0.05
104	5.01	221.92	0.0010	-0.00036	3.26	7.13	0.228	5.116	0.04
103	5.12	226.65	0.0010	-0.00035	3.04	7.48	0.224	5.201	0.04
102	5.23	231.37	0.0010	-0.00035	2.82	7.80	0.220	5.286	0.04
101	5.33	236.09	0.0009	-0.00034	2.60	8.10	0.216	5.371	0.04
100	5.44	240.81	0.0009	-0.00034	2.39	8.38	0.212	5.456	0.04
99	5.55	245.53	0.0008	-0.00033	2.18	8.64	0.207	5.541	0.04
98	5.65	250.25	0.0008	-0.00032	1.98	8.87	0.202	5.627	0.04
97	5.76	254.98	0.0008	-0.00032	1.78	9.08	0.197	5.712	0.03
96	5.87	259.70	0.0007	-0.00031	1.59	9.27	0.192	5.797	0.03
95	5.97	264.42	0.0007	-0.00030	1.40	9.44	0.187	5.882	0.03
94	6.08	269.14	0.0007	-0.00030	1.22	9.59	0.182	5.967	0.03
93	6.19	273.86	0.0006	-0.00029	1.05	9.72	0.177	6.052	0.03
92	6.29	278.58	0.0006	-0.00028	0.87	9.83	0.171	6.137	0.03
91	6.40	283.31	0.0006	-0.00028	0.71	9.92	0.166	6.222	0.03
90	6.51	288.03	0.0006	-0.00027	0.55	10.00	0.160	6.307	0.03
89	6.61	292.75	0.0005	-0.00026	0.39	10.06	0.154	6.392	0.02
88	6.72	297.47	0.0005	-0.00025	0.25	10.10	0.149	6.477	0.02
87	6.83	302.19	0.0005	-0.00025	0.10	10.13	0.143	6.562	0.02
86	6.93	306.92	0.0004	-0.00024	-0.03	10.14	0.137	6.648	0.02
85	7.04	311.64	0.0004	-0.00023	-0.17	10.13	0.131	6.733	0.02
84	7.15	316.36	0.0004	-0.00022	-0.29	10.12	0.126	6.818	0.02
83	7.25	321.08	0.0004	-0.00022	-0.41	10.09	0.120	6.903	0.02
82	7.36	325.80	0.0004	-0.00021	-0.53	10.04	0.114	6.988	0.02
81	7.47	330.52	0.0003	-0.00020	-0.63	9.99	0.109	7.073	0.02
80	7.57	335.25	0.0003	-0.00020	-0.74	9.92	0.103	7.158	0.01
79	7.68	339.97	0.0003	-0.00019	-0.84	9.84	0.098	7.243	0.01
78	7.79	344.69	0.0003	-0.00018	-0.93	9.75	0.092	7.328	0.01
77	7.89	349.41	0.0002	-0.00017	-1.01	9.65	0.087	7.413	0.01
76	8.00	354.13	0.0002	-0.00017	-1.10	9.54	0.082	7.498	0.01
75	8.11	358.86	0.0002	-0.00016	-1.17	9.43	0.076	7.584	0.01

74	8.21	363.58	0.0002	-0.00015	-1.24	9.30	0.071	7.669	0.01
73	8.32	368.30	0.0002	-0.00015	-1.31	9.17	0.066	7.754	0.01
72	8.43	373.02	0.0002	-0.00014	-1.37	9.03	0.061	7.839	0.01
71	8.53	377.74	0.0002	-0.00013	-1.43	8.88	0.057	7.924	0.01
70	8.64	382.46	0.0001	-0.00013	-1.48	8.73	0.052	8.009	0.01
69	8.75	387.19	0.0001	-0.00012	-1.53	8.57	0.048	8.094	0.01
68	8.85	391.91	0.0001	-0.00012	-1.57	8.41	0.043	8.179	0.01
67	8.96	396.63	0.0001	-0.00011	-1.61	8.24	0.039	8.264	0.00
66	9.07	1257.24	0.0001	-0.00010	-1.72	8.07	0.109	8.349	0.01
65	9.17	1272.04	0.0001	-0.00010	-1.82	7.88	0.097	8.434	0.01
64	9.28	1286.83	0.0001	-0.00009	-1.90	7.69	0.085	8.520	0.01
63	9.39	1301.62	0.0001	-0.00009	-1.98	7.49	0.074	8.605	0.01
62	9.49	1316.41	0.0000	-0.00008	-2.04	7.28	0.063	8.690	0.01
61	9.60	1331.20	0.0000	-0.00008	-2.09	7.06	0.053	8.775	0.01
60	9.71	1345.99	0.0000	-0.00007	-2.13	6.84	0.043	8.860	0.00
59	9.81	1360.78	0.0000	-0.00007	-2.17	6.61	0.033	8.945	0.00
58	9.92	1375.57	0.0000	-0.00006	-2.19	6.38	0.024	9.030	0.00
57	10.03	1390.36	0.0000	-0.00006	-2.21	6.14	0.016	9.115	0.00
56	10.13	1405.16	0.0000	-0.00005	-2.22	5.91	0.008	9.200	0.00
55	10.24	1419.95	0.0000	-0.00005	-2.22	5.67	0.000	9.285	0.00
54	10.35	1434.74	0.0000	-0.00004	-2.21	5.44	-0.007	9.370	0.00
53	10.45	1449.53	0.0000	-0.00004	-2.20	5.20	-0.013	9.456	0.00
52	10.56	1464.32	0.0000	-0.00004	-2.18	4.97	-0.020	9.541	0.00
51	10.67	1479.11	0.0000	-0.00003	-2.15	4.73	-0.025	9.626	0.00
50	10.77	1493.90	0.0000	-0.00003	-2.12	4.50	-0.031	9.711	0.00
49	10.88	1508.69	0.0000	-0.00003	-2.08	4.28	-0.035	9.796	0.00
48	10.99	1523.48	0.0000	-0.00002	-2.05	4.06	-0.040	9.881	0.00
47	11.09	1538.28	0.0000	-0.00002	-2.00	3.84	-0.044	9.966	0.00
46	11.20	1553.07	0.0000	-0.00002	-1.95	3.62	-0.047	10.051	0.00
45	11.31	1567.86	0.0000	-0.00002	-1.90	3.42	-0.051	10.136	0.00
44	11.41	1582.65	0.0000	-0.00001	-1.85	3.21	-0.053	10.221	-0.01
43	11.52	1597.44	0.0000	-0.00001	-1.79	3.01	-0.056	10.306	-0.01
42	11.63	1612.23	0.0000	-0.00001	-1.74	2.82	-0.058	10.392	-0.01
41	11.73	1627.02	0.0000	-0.00001	-1.68	2.64	-0.060	10.477	-0.01
40	11.84	1641.81	0.0000	0.00000	-1.61	2.46	-0.062	10.562	-0.01
39	11.95	1656.60	0.0000	0.00000	-1.55	2.29	-0.063	10.647	-0.01
38	12.05	1671.40	0.0000	0.00000	-1.49	2.12	-0.064	10.732	-0.01
37	12.16	1686.19	0.0000	0.00000	-1.42	1.96	-0.064	10.817	-0.01
36	12.27	1700.98	0.0000	0.00000	-1.36	1.81	-0.065	10.902	-0.01
35	12.37	1715.77	0.0000	0.00000	-1.29	1.67	-0.065	10.987	-0.01
34	12.48	1730.56	0.0000	0.00000	-1.23	1.53	-0.065	11.072	-0.01
33	12.59	1745.35	0.0000	0.00000	-1.16	1.40	-0.065	11.157	-0.01
32	12.69	1760.14	0.0000	0.00001	-1.10	1.27	-0.064	11.242	-0.01
31	12.80	1774.93	0.0000	0.00001	-1.04	1.16	-0.064	11.327	-0.01
30	12.91	1789.72	0.0000	0.00001	-0.97	1.05	-0.063	11.413	-0.01
29	13.01	1804.52	0.0000	0.00001	-0.91	0.94	-0.062	11.498	-0.01
28	13.12	1819.31	0.0000	0.00001	-0.85	0.85	-0.061	11.583	-0.01
27	13.23	1834.10	0.0000	0.00001	-0.79	0.75	-0.059	11.668	-0.01
26	13.33	1848.89	0.0000	0.00001	-0.73	0.67	-0.058	11.753	0.00
25	13.44	1863.68	0.0000	0.00001	-0.68	0.59	-0.056	11.838	0.00
24	13.55	1878.47	0.0000	0.00001	-0.62	0.52	-0.055	11.923	0.00
23	13.65	1893.26	0.0000	0.00001	-0.57	0.45	-0.053	12.008	0.00
22	13.76	1908.05	0.0000	0.00001	-0.52	0.39	-0.051	12.093	0.00
21	13.87	1922.84	0.0000	0.00001	-0.47	0.34	-0.049	12.178	0.00
20	13.97	1937.64	0.0000	0.00001	-0.42	0.29	-0.047	12.263	0.00
19	14.08	1952.43	0.0000	0.00001	-0.38	0.24	-0.045	12.349	0.00
18	14.19	1967.22	0.0000	0.00001	-0.33	0.20	-0.043	12.434	0.00
17	14.29	1982.01	0.0000	0.00001	-0.29	0.17	-0.040	12.519	0.00
16	14.40	1996.80	0.0000	0.00001	-0.25	0.14	-0.038	12.604	0.00
15	14.51	2011.59	0.0000	0.00001	-0.22	0.11	-0.036	12.689	0.00
14	14.61	2026.38	0.0000	0.00001	-0.19	0.09	-0.033	12.774	0.00
13	14.72	2041.17	0.0000	0.00001	-0.16	0.07	-0.031	12.859	0.00
12	14.83	2055.96	0.0000	0.00001	-0.13	0.05	-0.028	12.944	0.00
11	14.93	2070.76	0.0000	0.00001	-0.10	0.04	-0.025	13.029	0.00
10	15.04	2085.55	0.0000	0.00001	-0.08	0.03	-0.023	13.114	0.00
9	15.15	2100.34	0.0000	0.00001	-0.06	0.02	-0.020	13.199	0.00
8	15.25	2115.13	0.0000	0.00001	-0.04	0.01	-0.017	13.285	0.00
7	15.36	2129.92	0.0000	0.00001	-0.03	0.01	-0.014	13.370	0.00
6	15.47	2144.71	0.0000	0.00001	-0.02	0.00	-0.012	13.455	0.00
5	15.57	2159.50	0.0000	0.00001	-0.01	0.00	-0.009	13.540	0.00
4	15.68	2174.29	0.0000	0.00001	0.00	0.00	-0.006	13.625	0.00
3	15.79	2189.08	0.0000	0.00001	0.00	0.00	-0.003	13.710	0.00
2	15.89	2203.88	0.0000	0.00001	0.00	0.00	0.000	13.795	0.00
						0.00			

Profundidad del punto de momento nulo	3.63	m
Momento de la fuerza en cabeza a nivel del punto de momento nulo	43.52	ton*m
Momento de la reacción del terreno por encima del punto de momento nulo	7.24	ton*m
Profundidad de cálculo del punto de inflexión (*)	3.02	m

A efectos de cálculo de la cimentación se toma una profundidad del punto de inflexión de 3 metros

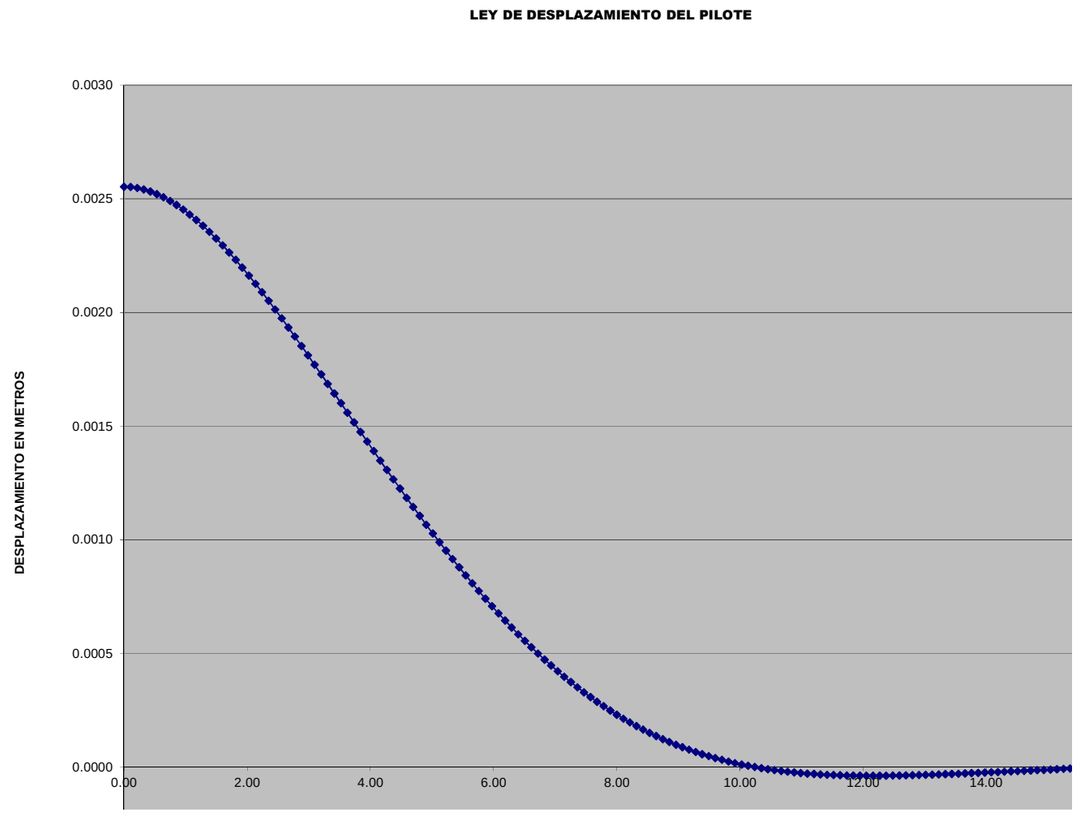

LEY DE CORTANTES EN PILOTE

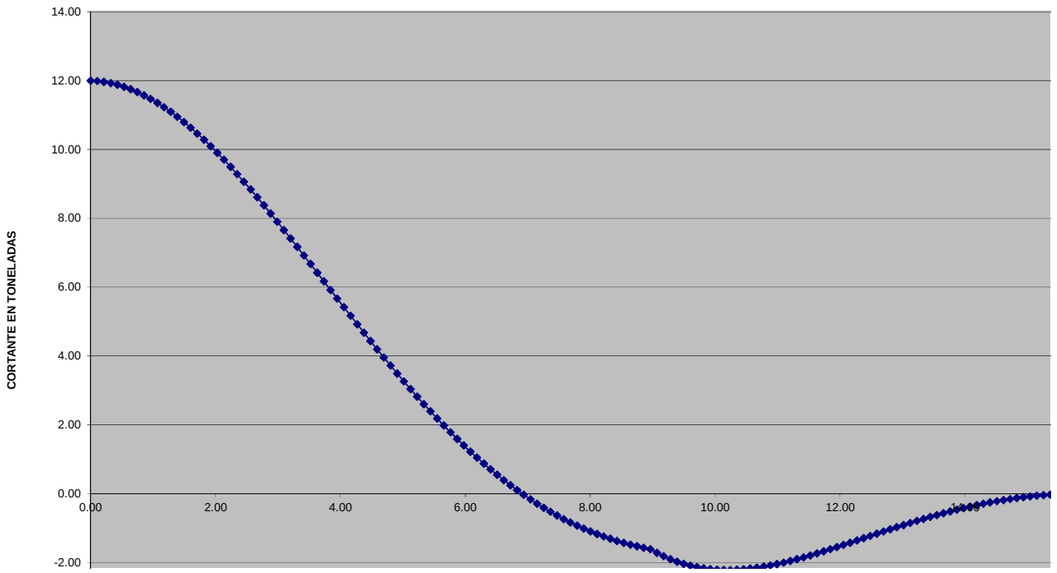

LEY DE FLECTORES EN PILOTE

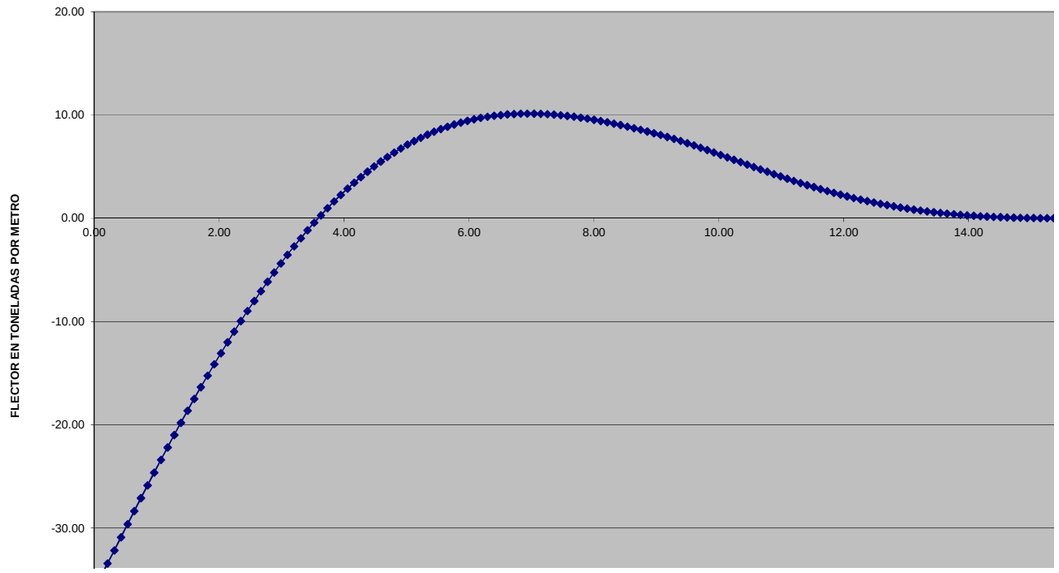

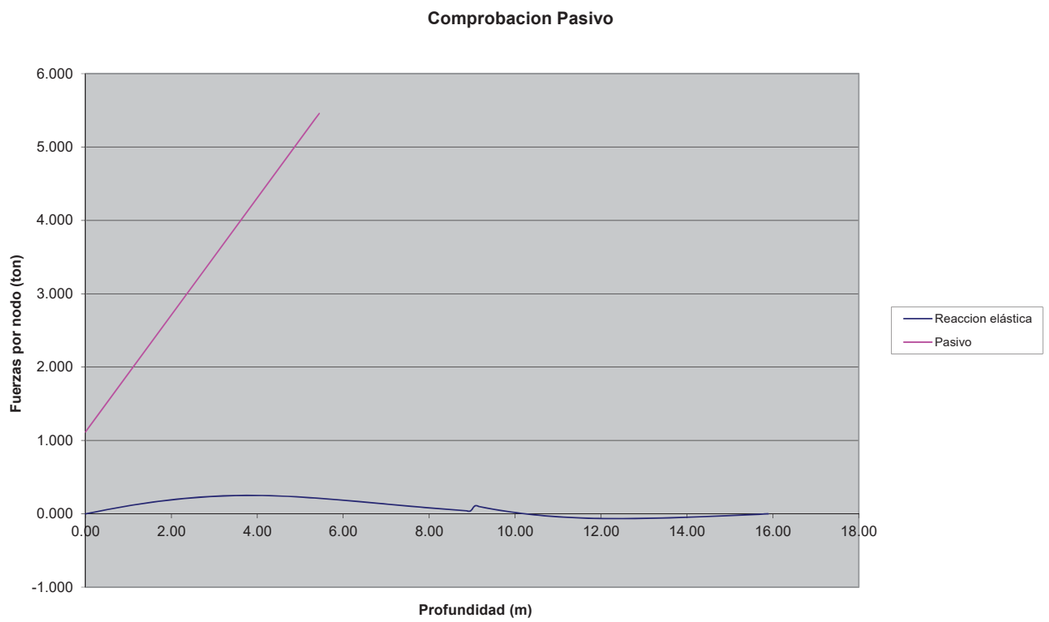

E1_rv02.sdb 05/06/2017

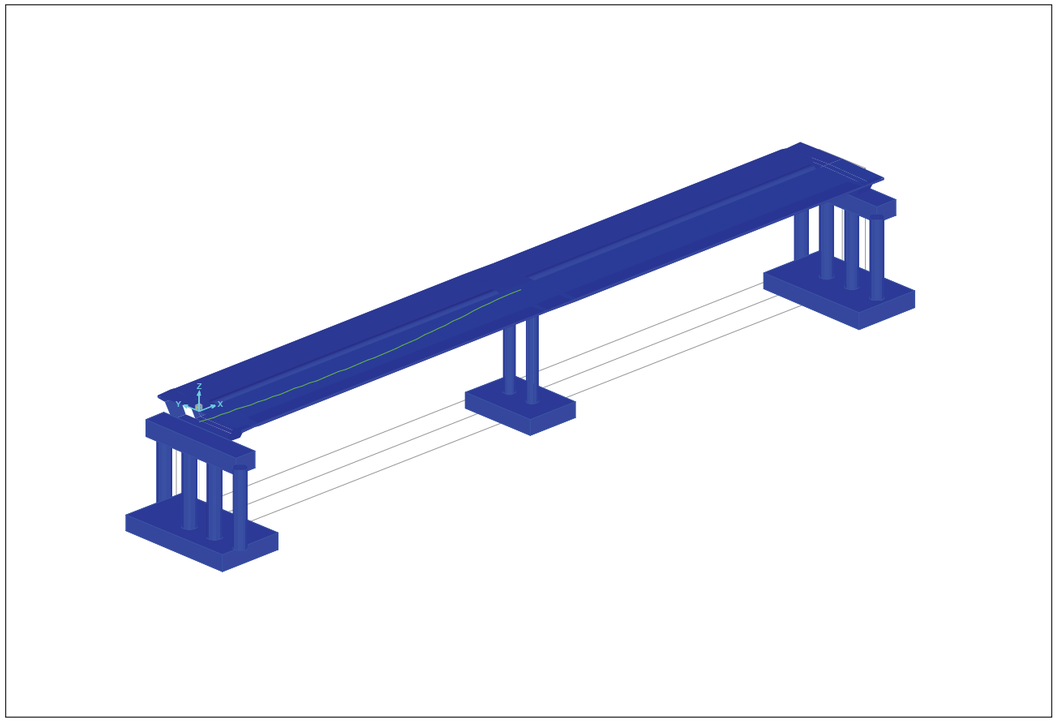

SAP2000 19.0.0 3-D View KN, m, C

E1_rv02.sdb 05/06/2017

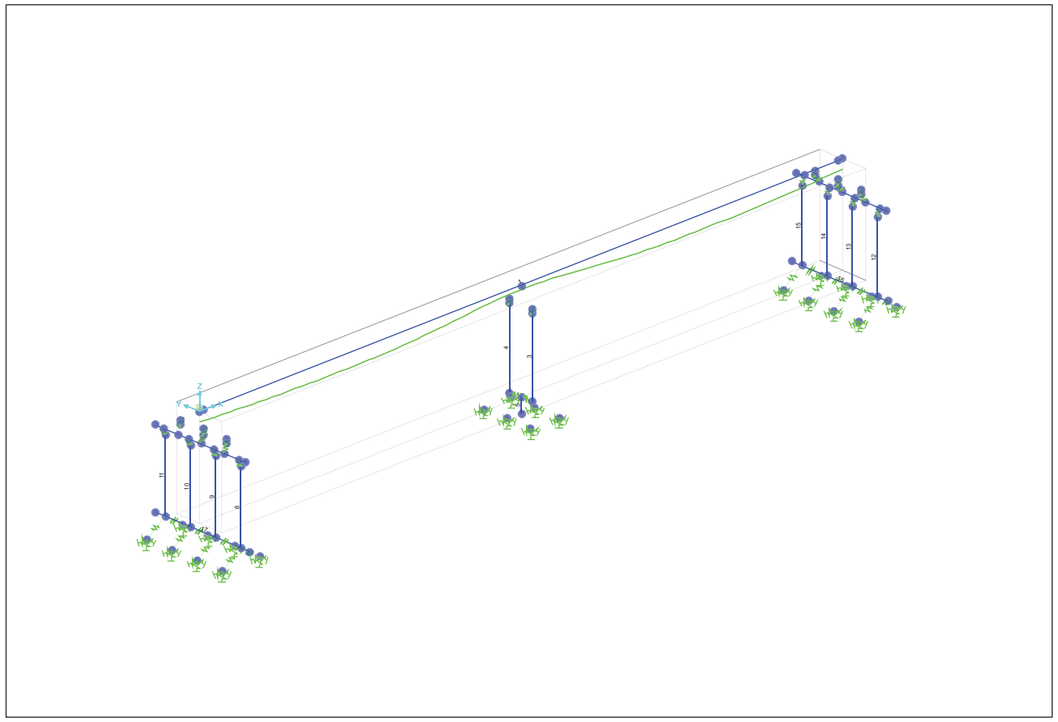

SAP2000 19.0.0 3-D View KN, m, C

E1_rv02.sdb 05/06/2017

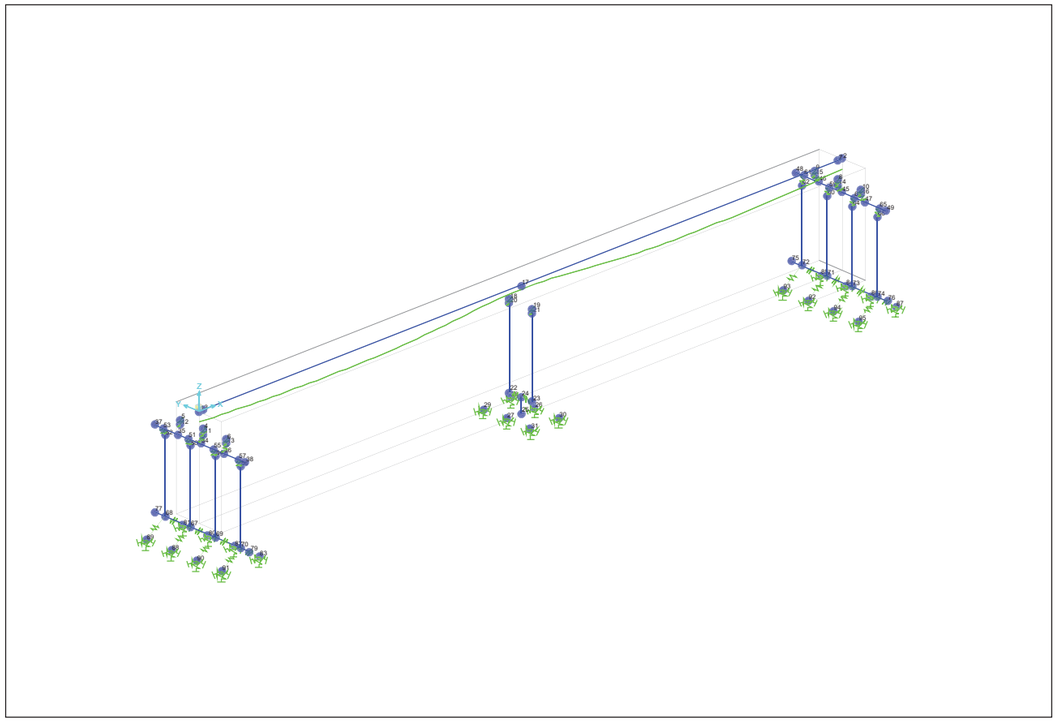

SAP2000 19.0.0 3-D View KN, m, C

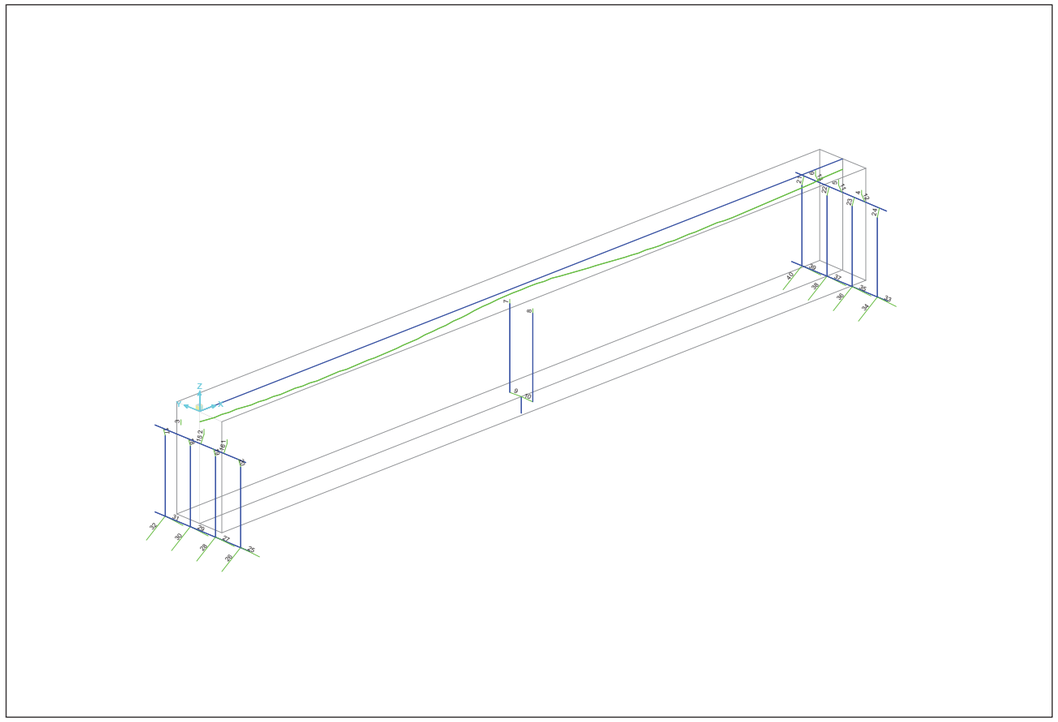

E1_rv02.sdb 05/06/2017

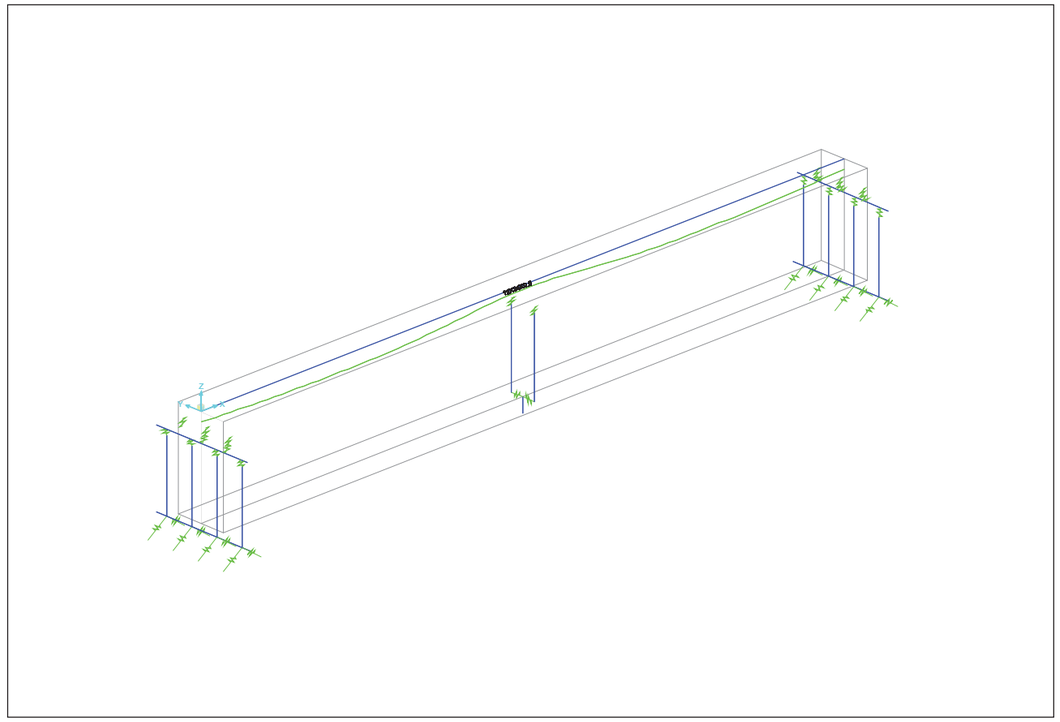

SAP2000 19.0.0 3-D View KN, m, C

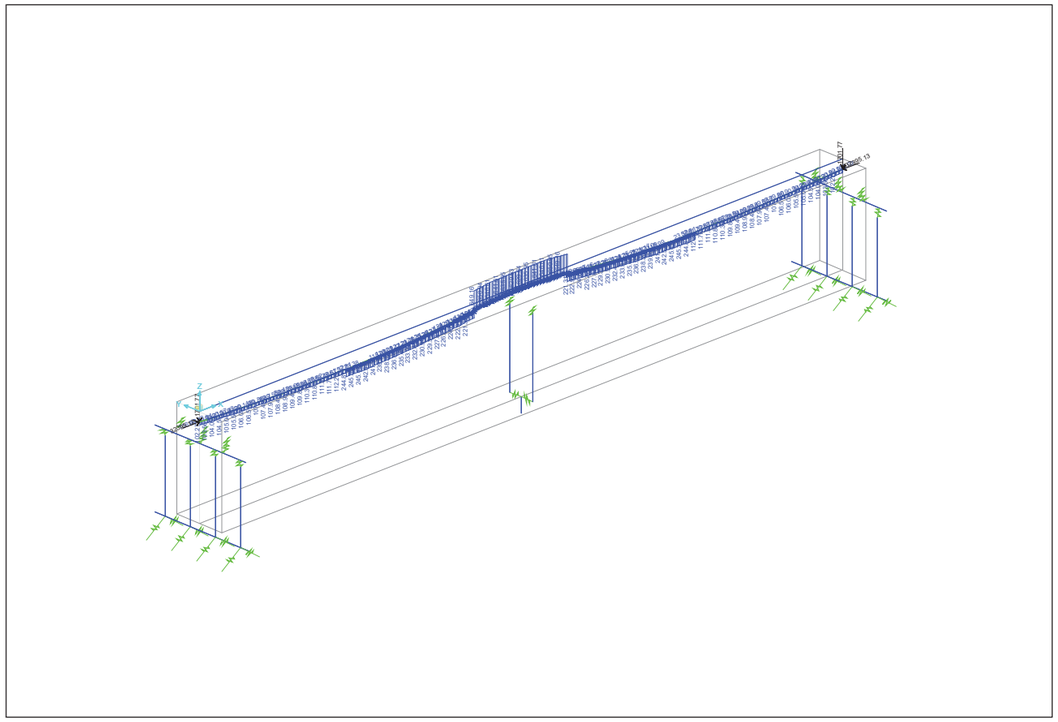

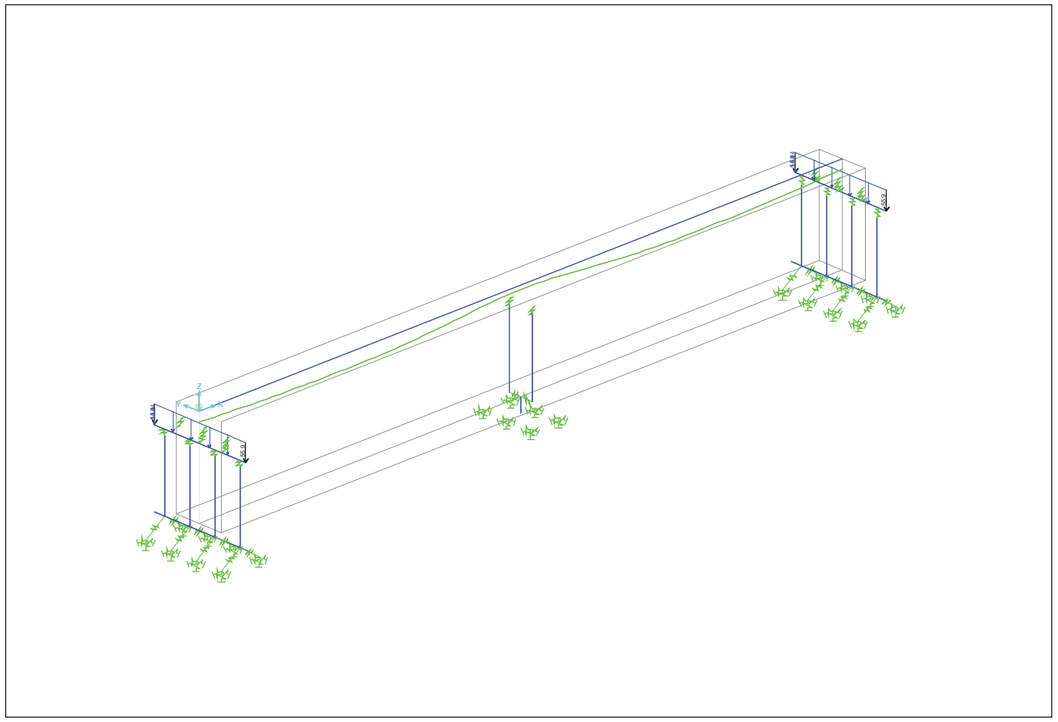

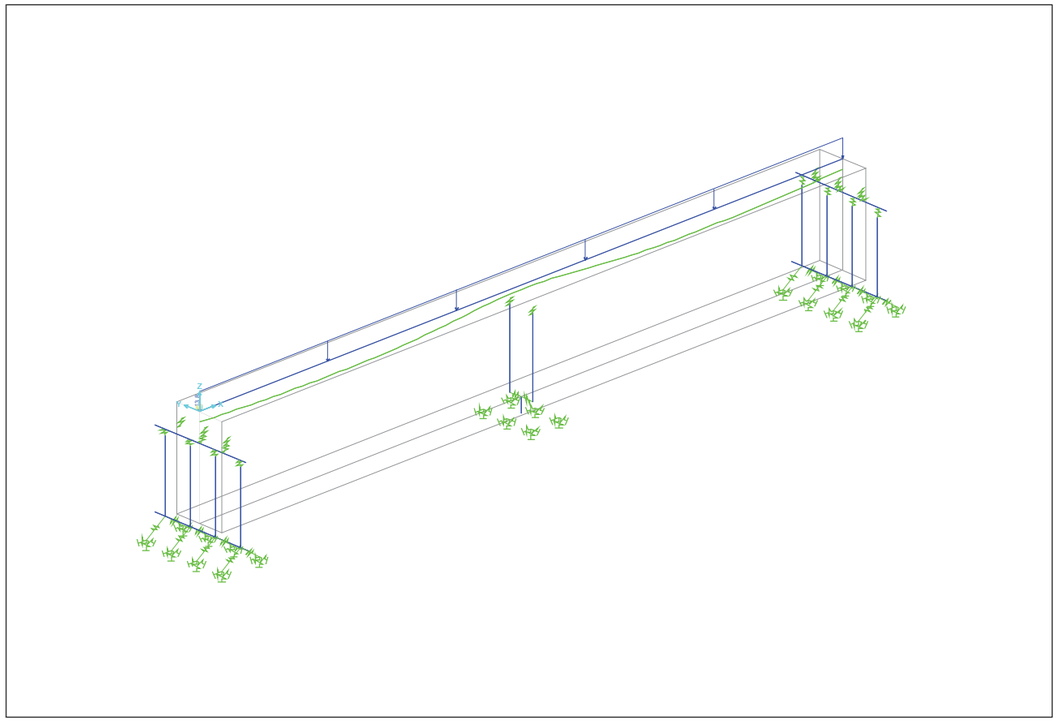

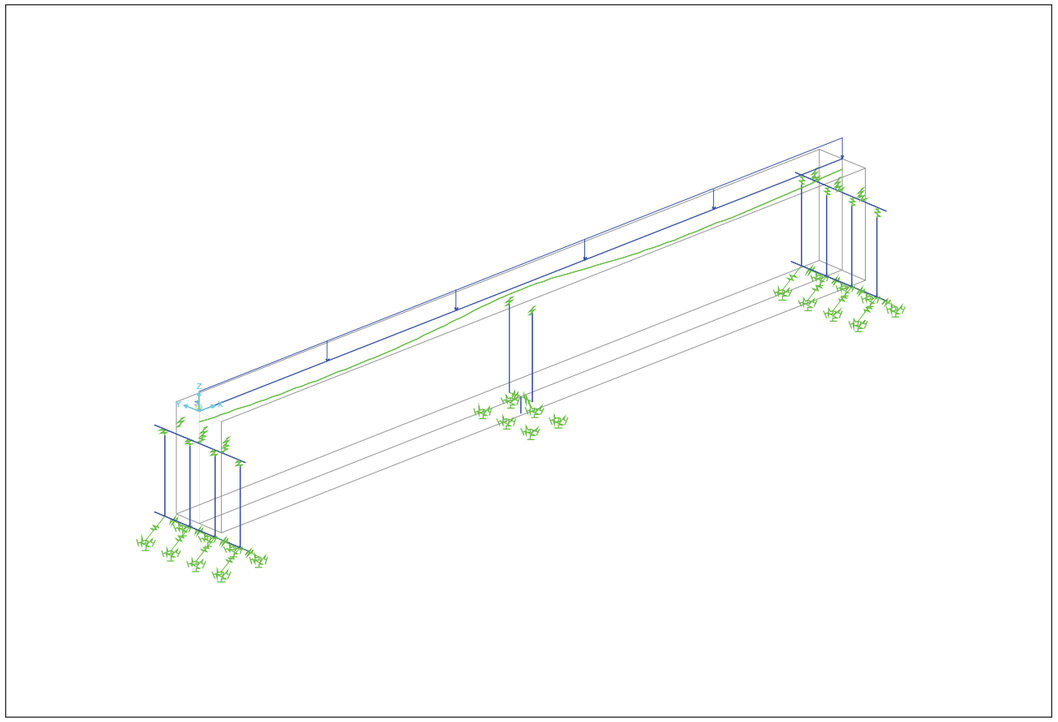

E1_rv02.sdb 05/06/2017

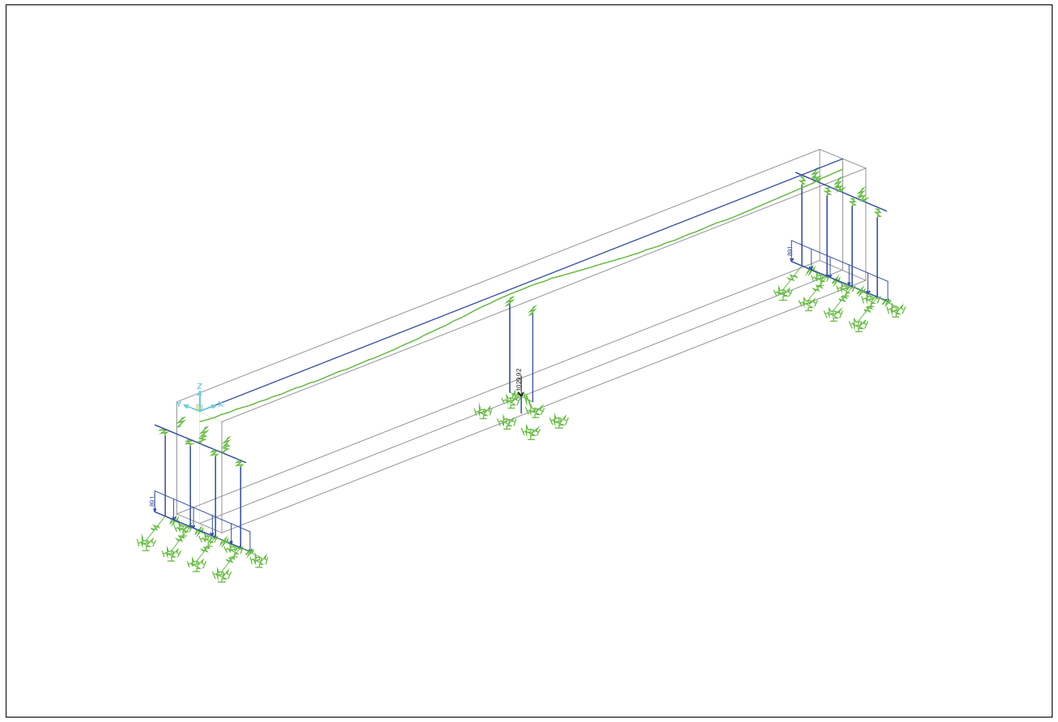

SAP2000 19.0.0 Frame Span Loads (PTIERR_CIM) (GLOBAL CSys) KN, m, C

E1_rv02.sdb 05/06/2017

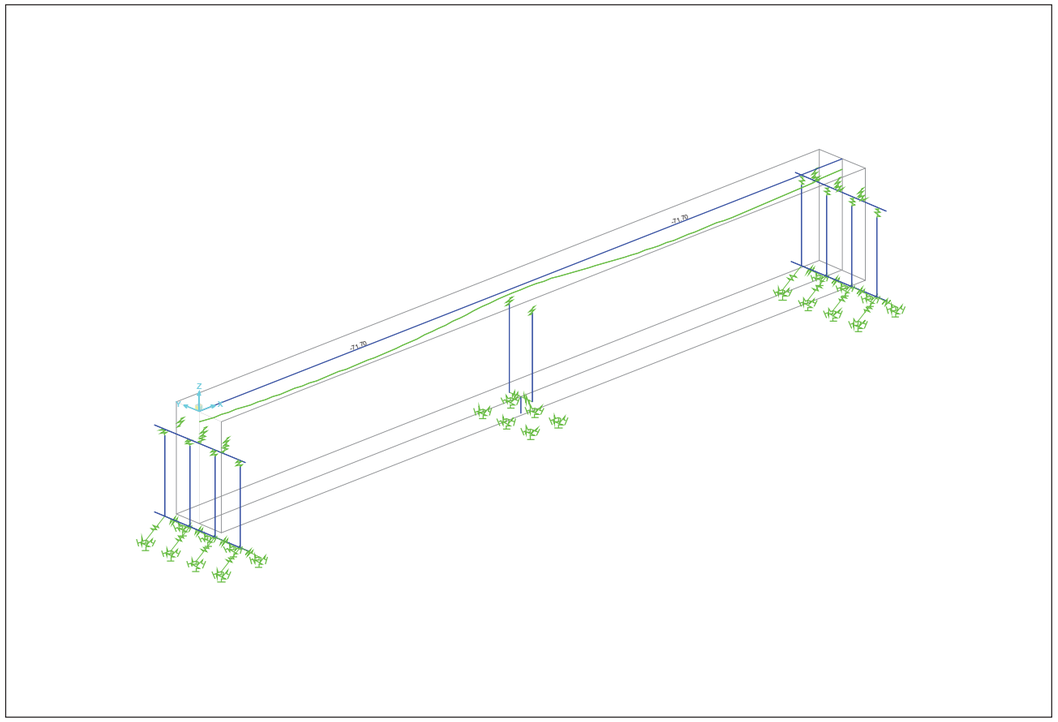

SAP2000 19.0.0 Frame Temperatures (RETRYFLU) KN, m, C

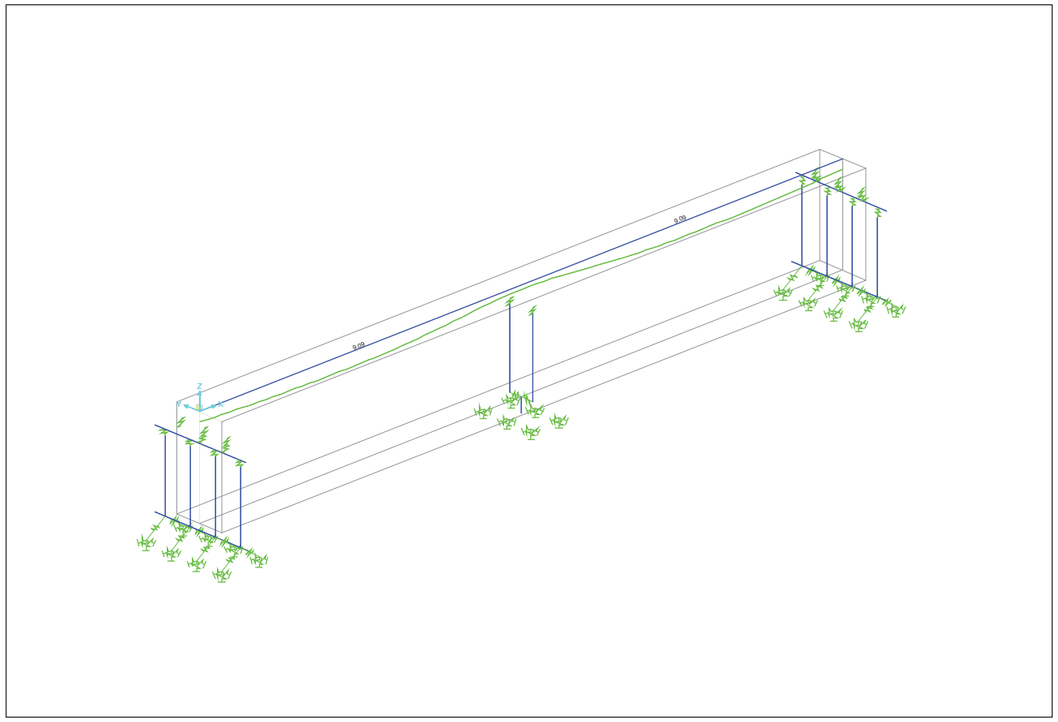
9.00
9.00
Z
X

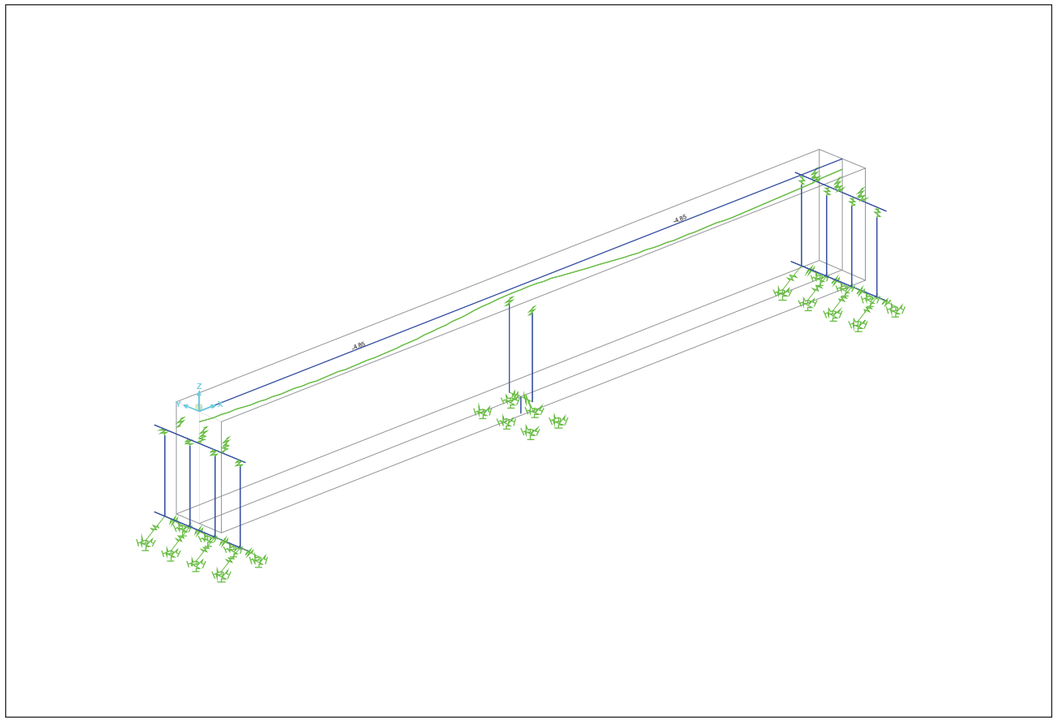
4.95
4.95
Z
X

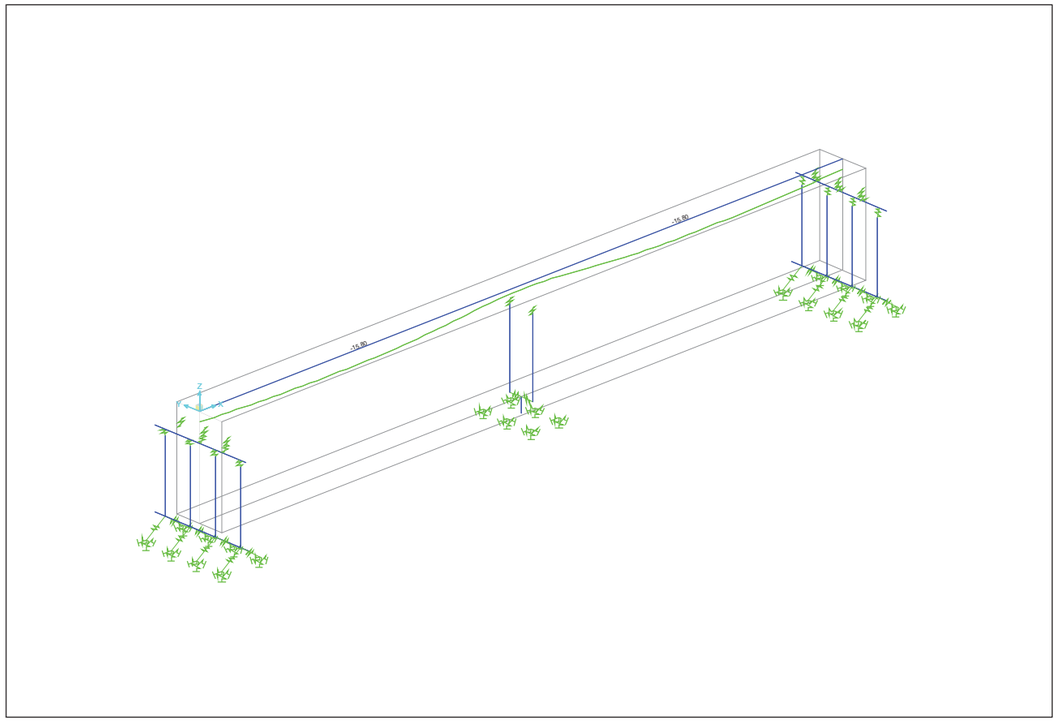
19.80
19.80
Z
X

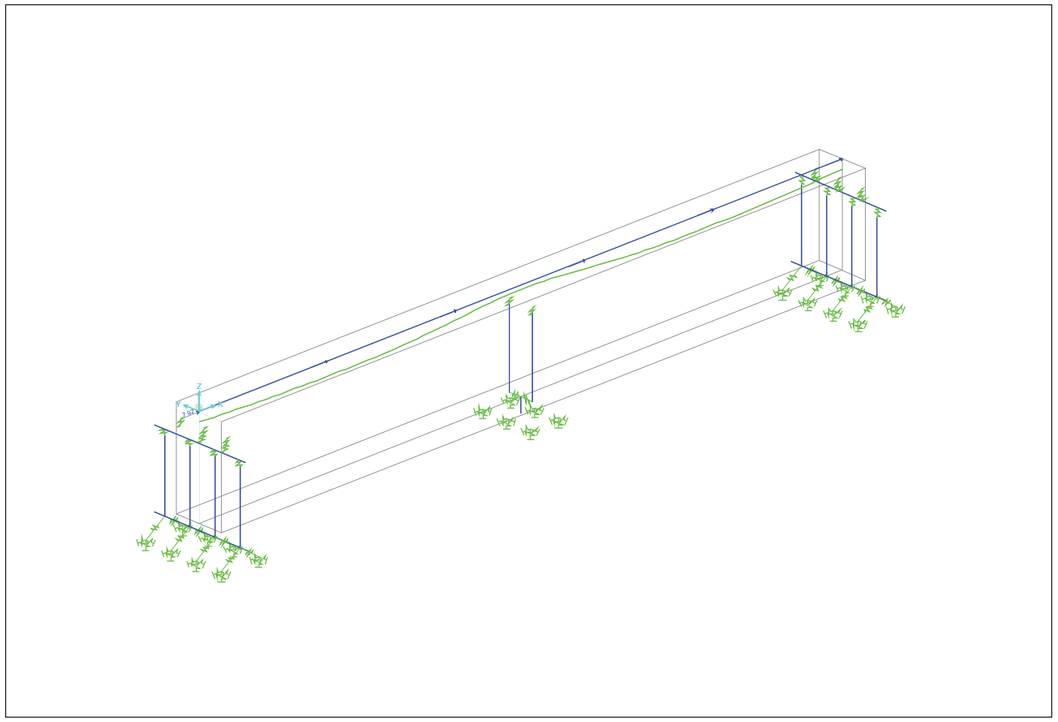
Z
X

E1_rv02.sdb 05/06/2017

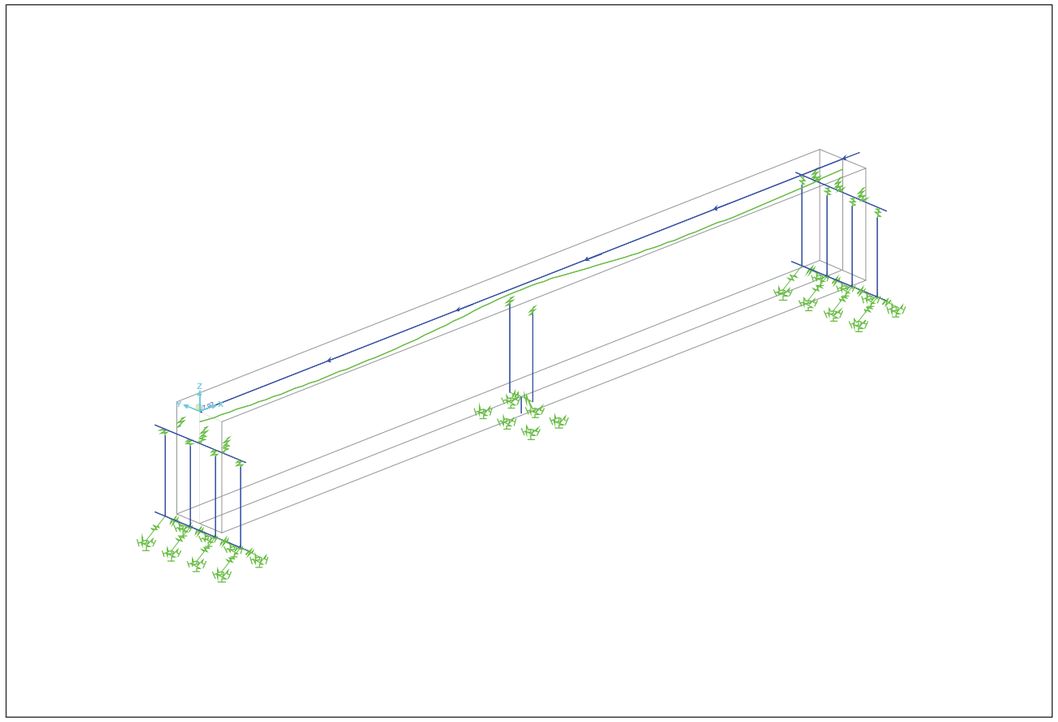

SAP2000 19.0.0 Frame Span Loads (FRENADO_2) (GLOBAL CSys) KN, m, C

E1_rv02.sdb 05/06/2017

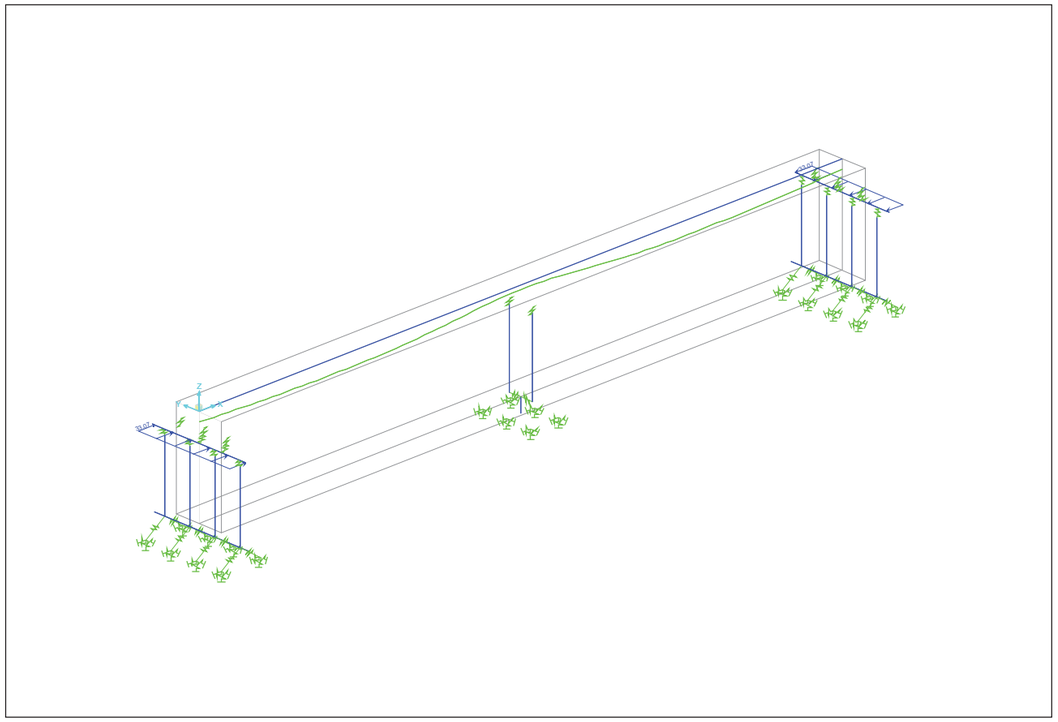

SAP2000 19.0.0 Frame Span Loads (E_TIERRAS) (GLOBAL CSys) KN, m, C

E1_rv02.sdb 05/06/2017

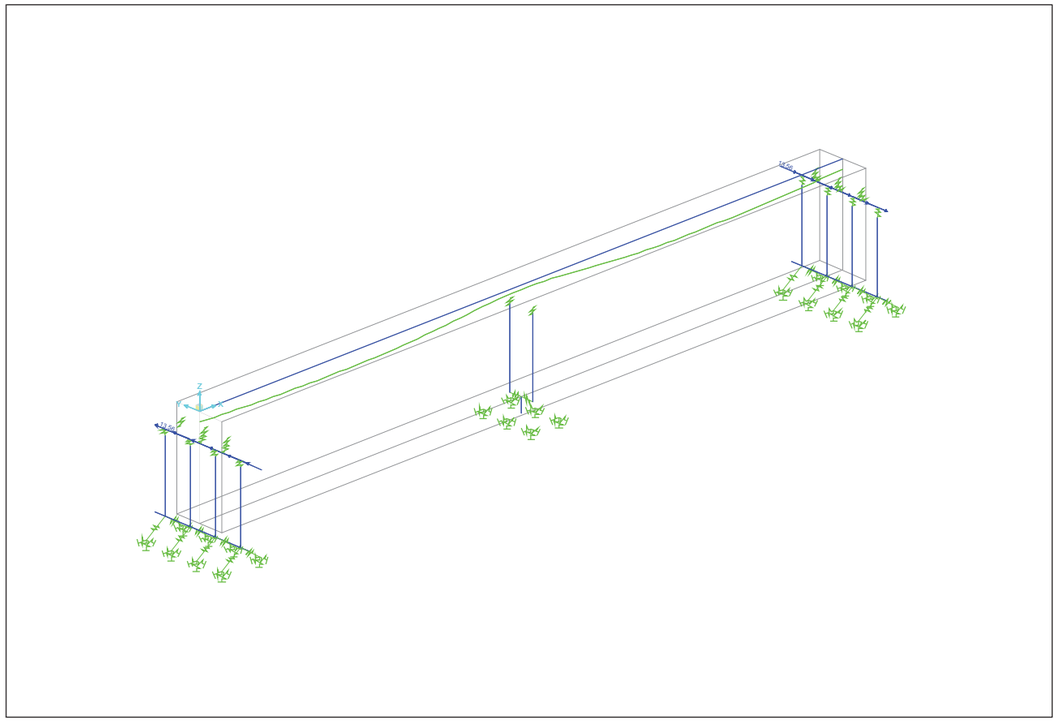

SAP2000 19.0.0 Frame Span Moments (E_TIERRAS) (GLOBAL CSys) KN, m, C

E1_rv02.sdb 05/06/2017

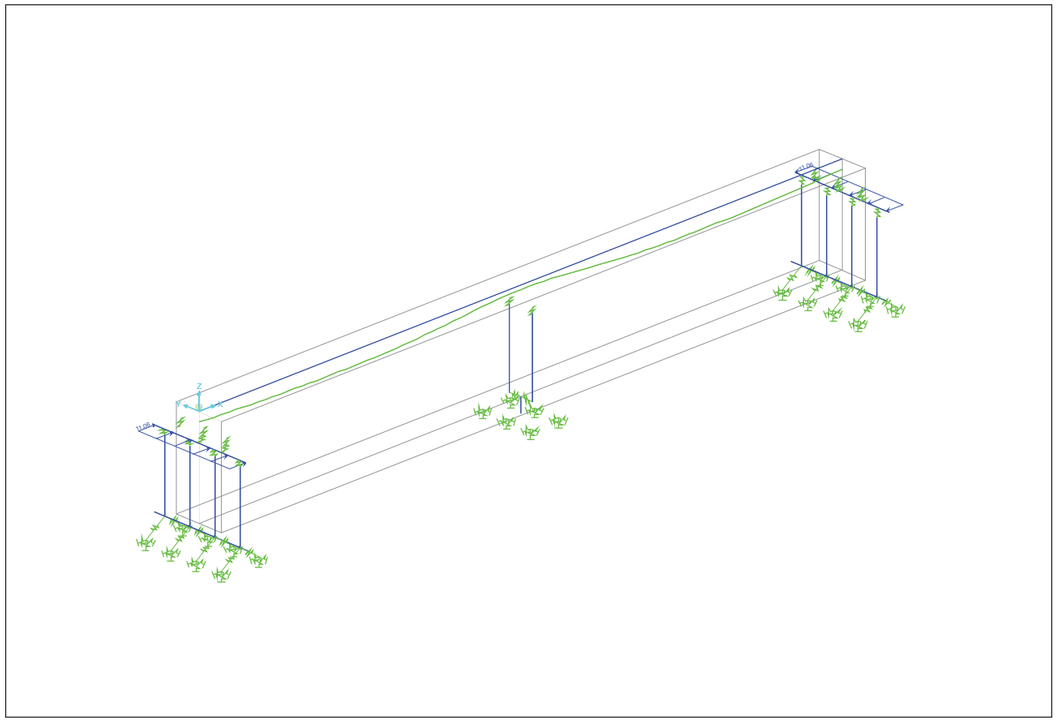

SAP2000 19.0.0 Frame Span Loads (E_SC) (GLOBAL CSys) KN, m, C

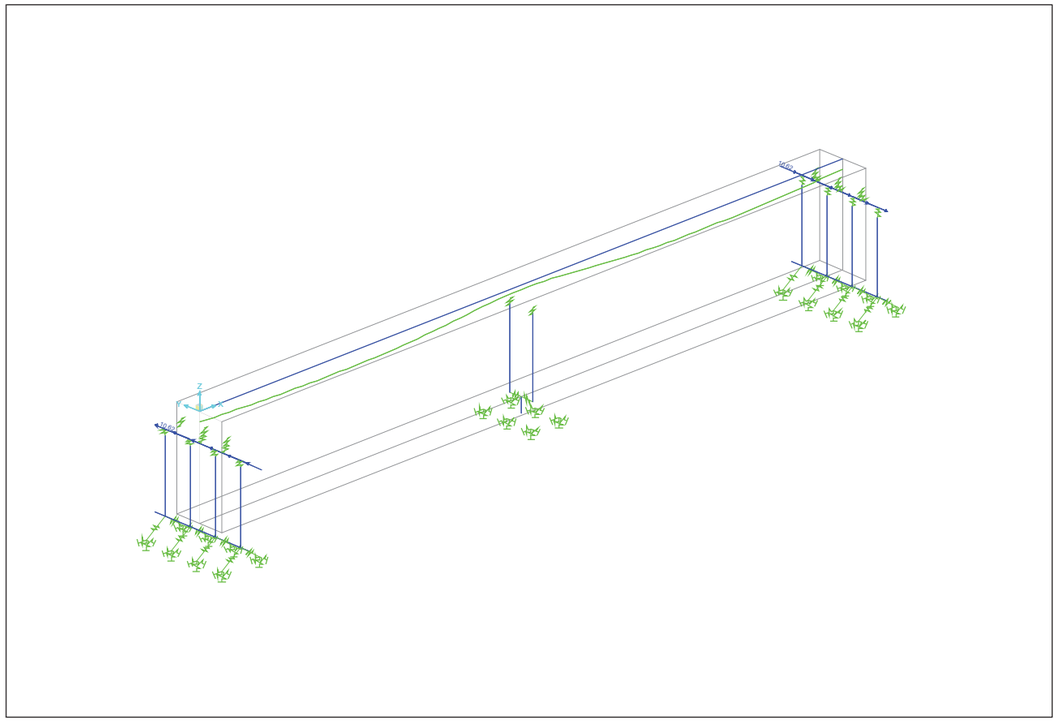

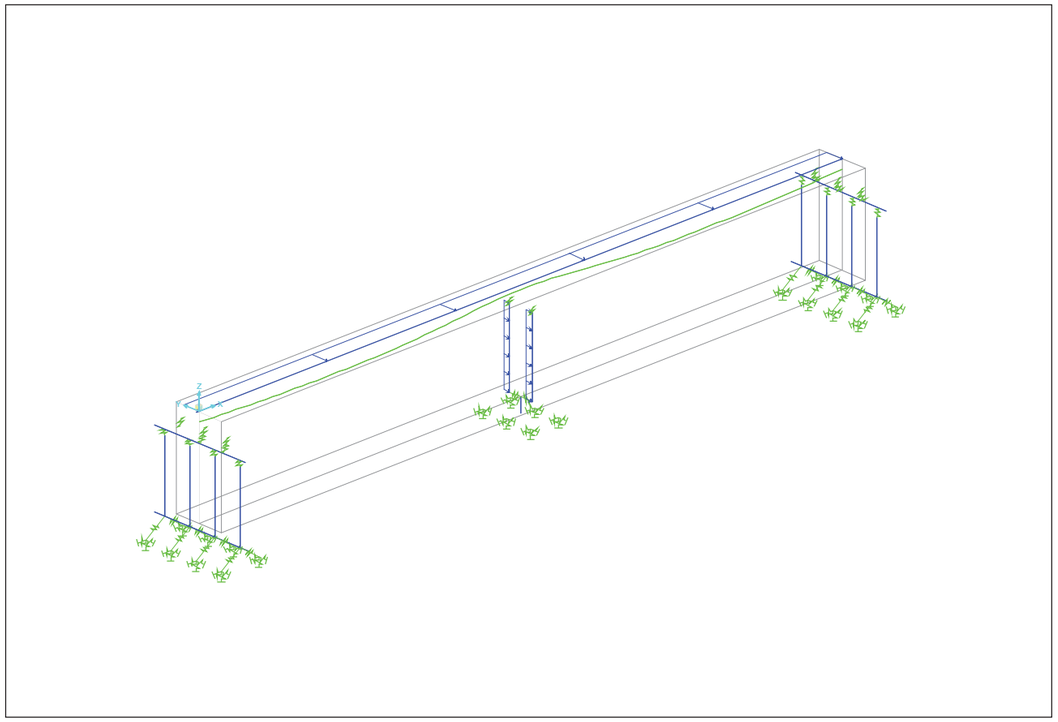

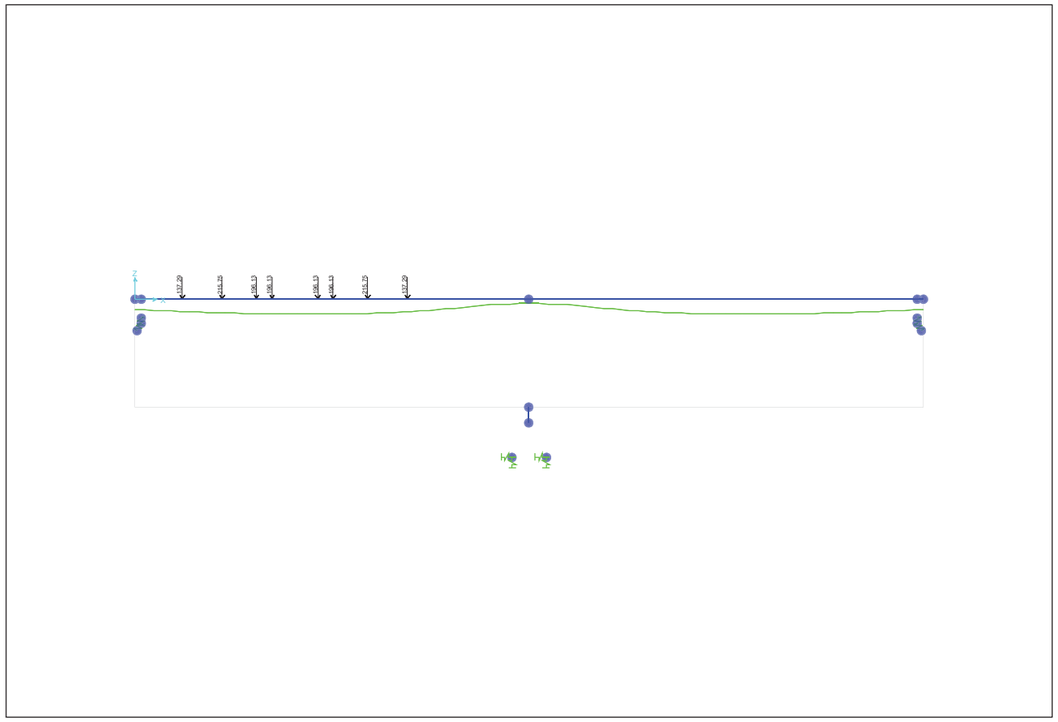

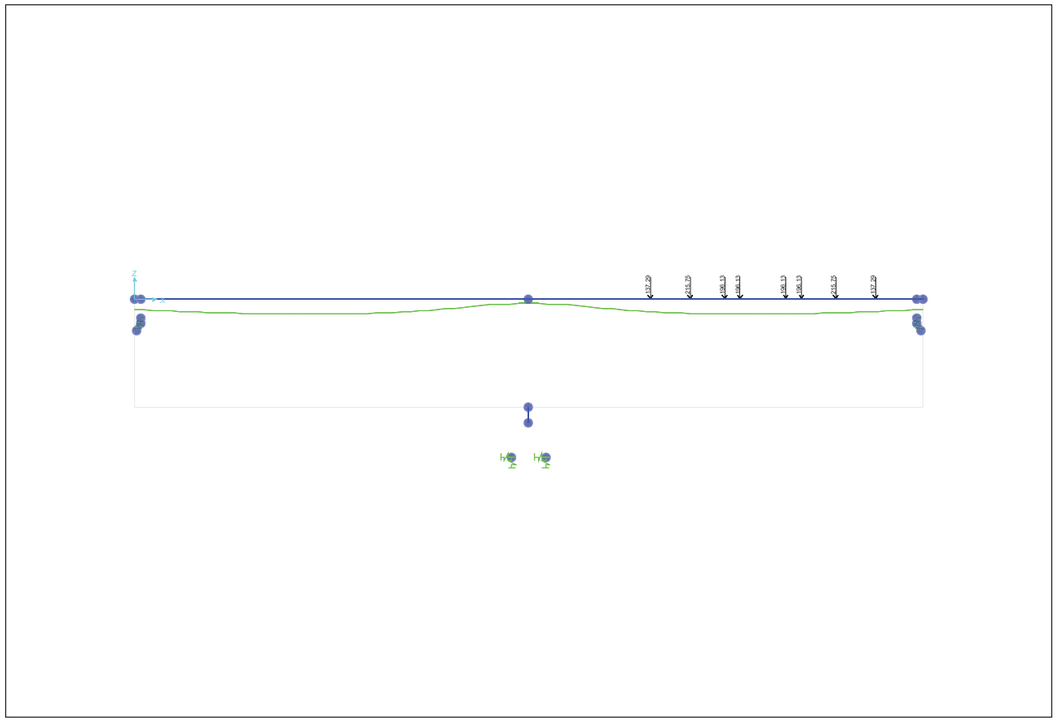

E1_rv04.sdb 08/06/2017

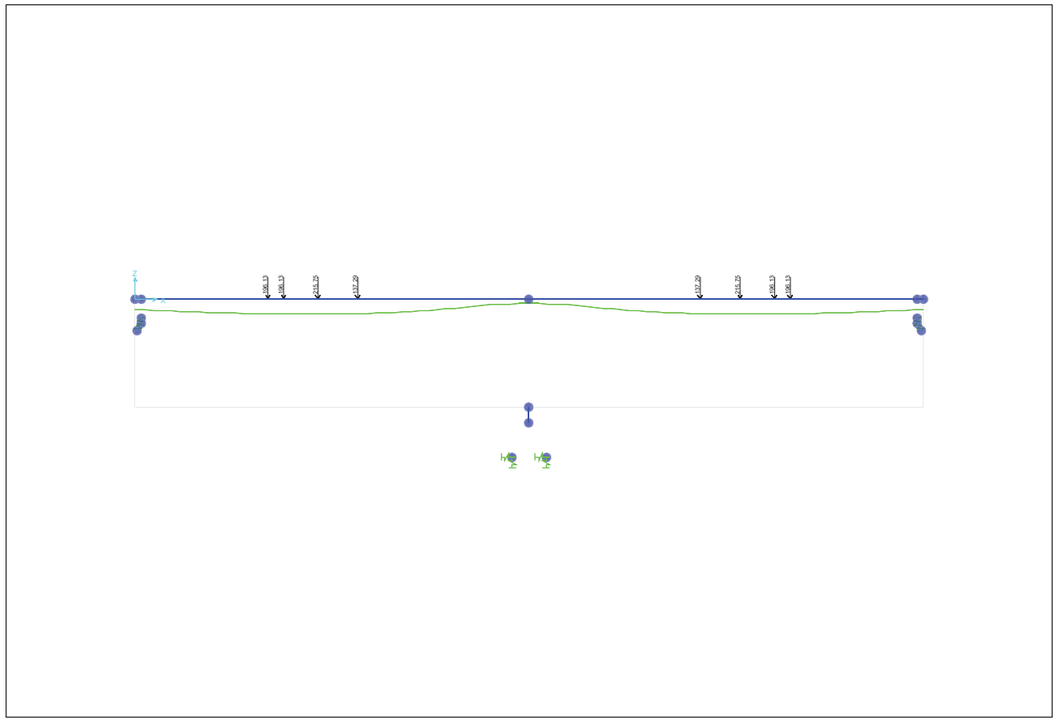

SAP2000 19.0.0 Frame Span Loads (PCARGA_HIP_3) (GLOBAL CSys) KN, m, C

Table: Bridge Response, Part 1 of 3

Table: Bridge Response, Part 1 of 3

DisplS	Reactions	Frames	ShellRes	ShellStr	PlnAsoStr	SolidStr	LinkFD	DisplsC
ALL	ALL	ALL	None	None	None	None	ALL	No

Table: Bridge Response, Part 2 of 3

Table: Bridge Response, Part 2 of 3

ReactionsC	FramesC	ShellResC	ShellStrC	PlnAsoStrC	SolidStrC	LinkFDC	SectCut	CalcMethod
No	Yes	No	No	No	No	No	Yes	Exact

Table: Bridge Response, Part 3 of 3

Table: Bridge Response, Part 3 of 3
AllowReduce
No

Table: Case - Modal 1 - General

Table: Case - Modal 1 - General

Case	ModeType	MaxNumModes	MinNumModes	EigenShift	EigenCutoff	EigenTol	AutoShift
				Cyc/sec	Cyc/sec		
MODAL	Eigen	50	1	0.0000E+00	0.0000E+00	1.0000E-09	Yes

Table: Case - Moving Load 1 - Lane Assignments

Table: Case - Moving Load 1 - Lane Assignments

Case	AssignNum	VehClass	ScaleFactor	MinLoaded	MaxLoaded	NumLanes
SC_CARRIL_1	1	SC_CARRIL_1	1.	0	0	1
VP_CARRIL_1	1	VP_CARRIL_1	1.	0	0	1
SC_CARRIL_2	1	SC_CARRIL_2	1.	0	0	1
VP_CARRIL_2	1	VP_CARRIL_2	1.	0	0	1
SC_CARRIL_REM	1	SC_CARRIL_REM	1.	0	0	1

Table: Case - Moving Load 2 - Lanes Loaded

Table: Case - Moving Load 2 - Lanes Loaded

Case	AssignNum	Lane
SC_CARRIL_1	1	CARRIL_1
VP_CARRIL_1	1	CARRIL_1

Table: Case - Moving Load 2 - Lanes Loaded

Case	AssignNum	Lane
SC_CARRIL_2	1	CARRIL_2
VP_CARRIL_2	1	CARRIL_2
SC_CARRIL_REM	1	CARRIL_REM

Table: Case - Moving Load 3 - MultiLane Factors

Table: Case - Moving Load 3 - MultiLane Factors

Case	NumberLanes	ScaleFactor
SC_CARRIL_1	1	1.
SC_CARRIL_1	2	1.
SC_CARRIL_1	3	1.
VP_CARRIL_1	1	1.
VP_CARRIL_1	2	1.
VP_CARRIL_1	3	1.
SC_CARRIL_2	1	1.
SC_CARRIL_2	2	1.
SC_CARRIL_2	3	1.
VP_CARRIL_2	1	1.
VP_CARRIL_2	2	1.
VP_CARRIL_2	3	1.
SC_CARRIL_REM	1	1.
SC_CARRIL_REM	2	1.
SC_CARRIL_REM	3	1.

Table: Case - Multistep Static 1 - Load Assignments

Table: Case - Multistep Static 1 - Load Assignments

Case	LoadType	LoadName	LoadSF
VP_C1	Load pattern	VP_C1	1.
VP_C2	Load pattern	VP_C2	1.

Table: Case - Response Spectrum 1 - General, Part 1 of 2

Table: Case - Response Spectrum 1 - General, Part 1 of 2

Case	ModalCombo	GMCf1	GMCf2	PerRigid	DirCombo	MotionType	DampingType
		Cyc/sec	Cyc/sec				
SISMO_X	CQC	1.0000E+00	0.0000E+00	SRSS	SRSS	Acceleration	Constant
SISMO_Y	CQC	1.0000E+00	0.0000E+00	SRSS	SRSS	Acceleration	Constant
SISMO_Z	CQC	1.0000E+00	0.0000E+00	SRSS	SRSS	Acceleration	Constant

Table: Case - Response Spectrum 1 - General, Part 2 of 2

Table: Case - Response Spectrum 1 - General, Part 2 of 2

Case	ConstDamp	EccenRatio	NumOverride
SISMO_X	0.05	0.	0

Table: Case - Response Spectrum 1 - General, Part 2 of 2

Case	ConstDamp	EccenRatio	NumOverride
SISMO_Y	0.05	0.	0
SISMO_Z	0.05	0.	0

Table: Case - Response Spectrum 2 - Load Assignments

Table: Case - Response Spectrum 2 - Load Assignments

Case	LoadType	LoadName	CoordSys	Function	Angle	TransAccSF
					Degrees	m/sec2
SISMO_X	Acceleration	U1	GLOBAL	espectro_e1	0.	1.507
SISMO_Y	Acceleration	U2	GLOBAL	espectro_e1	0.	1.507
SISMO_Z	Acceleration	U3	GLOBAL	espectro_e1	0.	1.0549

Table: Case - Static 1 - Load Assignments

Table: Case - Static 1 - Load Assignments

Case	LoadType	LoadName	LoadSF
DEAD	Load pattern	DEAD	1.
TESADO	Load pattern	TESADO	1.
PAVIMENTO	Load pattern	PAVIMENTO	1.
BARRERAS	Load pattern	BARRERAS	1.
RETRYFLU	Load pattern	RETRYFLU	1.
GRAD_TERM_1	Load pattern	GRAD_TERM_1	1.
TEMP_UNIF	Load pattern	TEMP_UNIF	1.
GRAD_TERM_2	Load pattern	GRAD_TERM_2	1.
FRENADO_1	Load pattern	FRENADO_1	1.
FRENADO_2	Load pattern	FRENADO_2	1.
PTIERR_CIM	Load pattern	PTIERR_CIM	1.
E_TIERRAS	Load pattern	E_TIERRAS	1.
E_SC	Load pattern	E_SC	1.
SC_UNIF	Load pattern	SC_UNIF	1.
VIENTO	Load pattern	VIENTO	1.
SC_UNIF_V1	Load pattern	SC_UNIF_V1	1.
SC_UNIF_V2	Load pattern	SC_UNIF_V2	1.

Table: Combination Definitions, Part 1 of 3

Table: Combination Definitions, Part 1 of 3

ComboName	ComboType	AutoDesign	CaseType	CaseName	ScaleFactor	SteelDesign
FRENADO	Envelope	No	Linear Static	FRENADO_1	1.	None
FRENADO			Linear Static	FRENADO_2	1.	
GRAD_TERM	Envelope	No	Linear Static	GRAD_TERM_1	1.	None
GRAD_TERM			Linear Static	GRAD_TERM_2	1.	
CUASIP	Linear Add	No	Linear Static	DEAD	1.	None
CUASIP			Linear Static	TESADO	0.9	
CUASIP			Linear Static	PAVIMENTO	1.	
CUASIP			Linear Static	BARRERAS	1.	
CUASIP			Linear Static	PTIERR_CIM	1.	
CUASIP			Moving Load	SC_CARRIL_1	0.	
CUASIP			Moving Load	SC_CARRIL_2	0.	

Table: Combination Definitions, Part 1 of 3

ComboName	ComboType	AutoDesign	CaseType	CaseName	ScaleFactor	SteelDesign
CUASIP			Moving Load	SC_CARRIL_REM	0.	
CUASIP			Moving Load	VP_CARRIL_1	0.	
CUASIP			Moving Load	VP_CARRIL_2	0.	
CUASIP			Linear Static	RETRYFLU	1.	
CUASIP			Response Combo	GRAD_TERM	0.5	
CUASIP			Linear Static	TEMP_UNIF	0.5	
CUASIP			Response Combo	FRENADO	0.	
CUASIP			Linear Static	VIENTO	0.	
CUASIP			Linear Static	E_TIERRAS	1.	
CUASIP			Linear Static	E_SC	0.	
CUASIP			Response Spectrum	SISMO_X	0.	
CUASIP			Response Spectrum	SISMO_Y	0.	
CUASIP			Response Spectrum	SISMO_Z	0.	
SC_UNIF_ENV	Envelope	No	Linear Static	SC_UNIF_V1	1.	None
SC_UNIF_ENV			Linear Static	SC_UNIF_V2	1.	
SC_UNIF_ENV			Linear Static	SC_UNIF	1.	
FREC_01	Linear Add	No	Linear Static	DEAD	1.	None
FREC_01			Linear Static	TESADO	0.9	
FREC_01			Linear Static	PAVIMENTO	1.	
FREC_01			Linear Static	BARRERAS	1.	
FREC_01			Linear Static	PTIERR_CIM	1.	
FREC_01			Linear Static	RETRYFLU	1.	
FREC_01			Response Combo	GRAD_TERM	0.5	
FREC_01			Linear Static	TEMP_UNIF	0.5	
FREC_01			Response Combo	FRENADO	0.	
FREC_01			Linear Static	VIENTO	0.	
FREC_01			Linear Static	E_TIERRAS	1.	
FREC_01			Linear Static	E_SC	0.	
FREC_01			Response Spectrum	SISMO_X	0.	
FREC_01			Response Spectrum	SISMO_Y	0.	
FREC_01			Response Spectrum	SISMO_Z	0.	
FREC_01			Multi-step Static	VP_C1	0.75	
FREC_01			Multi-step Static	VP_C2	0.75	
FREC_01			Response Combo	SC_UNIF_ENV	0.4	
CARACT_01	Linear Add	No	Linear Static	DEAD	1.	None
CARACT_01			Linear Static	TESADO	0.9	
CARACT_01			Linear Static	PAVIMENTO	1.	
CARACT_01			Linear Static	BARRERAS	1.	
CARACT_01			Linear Static	PTIERR_CIM	1.	
CARACT_01			Linear Static	RETRYFLU	1.	
CARACT_01			Response Combo	GRAD_TERM	0.6	
CARACT_01			Linear Static	TEMP_UNIF	0.6	
CARACT_01			Response Combo	FRENADO	1.	
CARACT_01			Linear Static	VIENTO	0.6	
CARACT_01			Linear Static	E_TIERRAS	1.	
CARACT_01			Linear Static	E_SC	1.	
CARACT_01			Response Spectrum	SISMO_X	0.	
CARACT_01			Response Spectrum	SISMO_Y	0.	
CARACT_01			Response Spectrum	SISMO_Z	0.	
CARACT_01			Multi-step Static	VP_C1	1.	
CARACT_01			Multi-step Static	VP_C2	1.	
CARACT_01			Response Combo	SC_UNIF_ENV	1.	
ELU_01	Linear Add	No	Linear Static	DEAD	1.35	None
ELU_01			Linear Static	TESADO	1.	

Table: Combination Definitions, Part 1 of 3

ComboName	ComboType	AutoDesign	CaseType	CaseName	ScaleFactor	SteelDesign
ELU_01			Linear Static	PAVIMENTO	1.35	
ELU_01			Linear Static	BARRERAS	1.35	
ELU_01			Linear Static	PTIERR_CIM	1.35	
ELU_01			Moving Load	SC_CARRIL_1	1.35	
ELU_01			Moving Load	SC_CARRIL_2	1.35	
ELU_01			Moving Load	SC_CARRIL_REM	1.35	
ELU_01			Moving Load	VP_CARRIL_1	1.35	
ELU_01			Moving Load	VP_CARRIL_2	1.35	
ELU_01			Linear Static	RETRYFLU	1.35	
ELU_01			Response Combo	GRAD_TERM	0.9	
ELU_01			Linear Static	TEMP_UNIF	0.9	
ELU_01			Response Combo	FRENADO	1.35	
ELU_01			Linear Static	VIENTO	0.9	
ELU_01			Linear Static	E_TIERRAS	1.5	
ELU_01			Linear Static	E_SC	1.5	
ELU_01			Response Spectrum	SISMO_X	0.	
ELU_01			Response Spectrum	SISMO_Y	0.	
ELU_01			Response Spectrum	SISMO_Z	0.	
ELU_02	Linear Add	No	Linear Static	DEAD	1.	None
ELU_02			Linear Static	TESADO	1.	
ELU_02			Linear Static	PAVIMENTO	0.67	
ELU_02			Linear Static	BARRERAS	1.	
ELU_02			Linear Static	PTIERR_CIM	1.	
ELU_02			Moving Load	SC_CARRIL_1	1.35	
ELU_02			Moving Load	SC_CARRIL_2	1.35	
ELU_02			Moving Load	SC_CARRIL_REM	1.35	
ELU_02			Moving Load	VP_CARRIL_1	1.35	
ELU_02			Moving Load	VP_CARRIL_2	1.35	
ELU_02			Linear Static	RETRYFLU	1.35	
ELU_02			Response Combo	GRAD_TERM	0.9	
ELU_02			Linear Static	TEMP_UNIF	0.9	
ELU_02			Response Combo	FRENADO	1.35	
ELU_02			Linear Static	VIENTO	0.9	
ELU_02			Linear Static	E_TIERRAS	1.5	
ELU_02			Linear Static	E_SC	1.5	
ELU_02			Response Spectrum	SISMO_X	0.	
ELU_02			Response Spectrum	SISMO_Y	0.	
ELU_02			Response Spectrum	SISMO_Z	0.	
ELU_SIS_X	Linear Add	No	Linear Static	DEAD	1.	None
ELU_SIS_X			Linear Static	TESADO	1.	
ELU_SIS_X			Linear Static	PAVIMENTO	1.	
ELU_SIS_X			Linear Static	BARRERAS	1.	
ELU_SIS_X			Linear Static	PTIERR_CIM	1.	
ELU_SIS_X			Moving Load	SC_CARRIL_1	0.2	
ELU_SIS_X			Moving Load	SC_CARRIL_2	0.2	
ELU_SIS_X			Moving Load	SC_CARRIL_REM	0.2	
ELU_SIS_X			Moving Load	VP_CARRIL_1	0.	
ELU_SIS_X			Moving Load	VP_CARRIL_2	0.	
ELU_SIS_X			Linear Static	RETRYFLU	1.	
ELU_SIS_X			Response Combo	GRAD_TERM	0.	
ELU_SIS_X			Linear Static	TEMP_UNIF	0.	
ELU_SIS_X			Response Combo	FRENADO	0.	
ELU_SIS_X			Linear Static	VIENTO	0.	
ELU_SIS_X			Linear Static	E_TIERRAS	1.	

Table: Combination Definitions, Part 1 of 3

ComboName	ComboType	AutoDesign	CaseType	CaseName	ScaleFactor	SteelDesign
ELU_SIS_X			Linear Static	E_SC	0.	
ELU_SIS_X			Response Spectrum	SISMO_X	1.	
ELU_SIS_X			Response Spectrum	SISMO_Y	0.3	
ELU_SIS_X			Response Spectrum	SISMO_Z	0.3	
ELU_SIS_Y	Linear Add	No	Linear Static	DEAD	1.	None
ELU_SIS_Y			Linear Static	TESADO	1.	
ELU_SIS_Y			Linear Static	PAVIMENTO	1.	
ELU_SIS_Y			Linear Static	BARRERAS	1.	
ELU_SIS_Y			Linear Static	PTIERR_CIM	1.	
ELU_SIS_Y			Moving Load	SC_CARRIL_1	0.2	
ELU_SIS_Y			Moving Load	SC_CARRIL_2	0.2	
ELU_SIS_Y			Moving Load	SC_CARRIL_REM	0.2	
ELU_SIS_Y			Moving Load	VP_CARRIL_1	0.	
ELU_SIS_Y			Moving Load	VP_CARRIL_2	0.	
ELU_SIS_Y			Linear Static	RETRYFLU	1.	
ELU_SIS_Y			Response Combo	GRAD_TERM	0.	
ELU_SIS_Y			Linear Static	TEMP_UNIF	0.	
ELU_SIS_Y			Response Combo	FRENADO	0.	
ELU_SIS_Y			Linear Static	VIENTO	0.	
ELU_SIS_Y			Linear Static	E_TIERRAS	1.	
ELU_SIS_Y			Linear Static	E_SC	0.	
ELU_SIS_Y			Response Spectrum	SISMO_X	0.3	
ELU_SIS_Y			Response Spectrum	SISMO_Y	1.	
ELU_SIS_Y			Response Spectrum	SISMO_Z	0.3	
ELU_SIS_Z	Linear Add	No	Linear Static	DEAD	1.	None
ELU_SIS_Z			Linear Static	TESADO	1.	
ELU_SIS_Z			Linear Static	PAVIMENTO	1.	
ELU_SIS_Z			Linear Static	BARRERAS	1.	
ELU_SIS_Z			Linear Static	PTIERR_CIM	1.	
ELU_SIS_Z			Moving Load	SC_CARRIL_1	0.2	
ELU_SIS_Z			Moving Load	SC_CARRIL_2	0.2	
ELU_SIS_Z			Moving Load	SC_CARRIL_REM	0.2	
ELU_SIS_Z			Moving Load	VP_CARRIL_1	0.	
ELU_SIS_Z			Moving Load	VP_CARRIL_2	0.	
ELU_SIS_Z			Linear Static	RETRYFLU	1.	
ELU_SIS_Z			Response Combo	GRAD_TERM	0.	
ELU_SIS_Z			Linear Static	TEMP_UNIF	0.	
ELU_SIS_Z			Response Combo	FRENADO	0.	
ELU_SIS_Z			Linear Static	VIENTO	0.	
ELU_SIS_Z			Linear Static	E_TIERRAS	1.	
ELU_SIS_Z			Linear Static	E_SC	0.	
ELU_SIS_Z			Response Spectrum	SISMO_X	0.3	
ELU_SIS_Z			Response Spectrum	SISMO_Y	0.3	
ELU_SIS_Z			Response Spectrum	SISMO_Z	1.	
FREC_02	Linear Add	No	Linear Static	DEAD	1.	None
FREC_02			Linear Static	TESADO	1.1	
FREC_02			Linear Static	PAVIMENTO	1.	
FREC_02			Linear Static	BARRERAS	1.	
FREC_02			Linear Static	PTIERR_CIM	1.	
FREC_02			Linear Static	RETRYFLU	1.	
FREC_02			Response Combo	GRAD_TERM	0.5	
FREC_02			Linear Static	TEMP_UNIF	0.5	
FREC_02			Response Combo	FRENADO	0.	
FREC_02			Linear Static	VIENTO	0.	

Table: Combination Definitions, Part 1 of 3

ComboName	ComboType	AutoDesign	CaseType	CaseName	ScaleFactor	SteelDesign
FREC_02			Linear Static	E_TIERRAS	1.	
FREC_02			Linear Static	E_SC	0.	
FREC_02			Response Spectrum	SISMO_X	0.	
FREC_02			Response Spectrum	SISMO_Y	0.	
FREC_02			Response Spectrum	SISMO_Z	0.	
FREC_02			Multi-step Static	VP_C1	0.75	
FREC_02			Multi-step Static	VP_C2	0.75	
FREC_02			Response Combo	SC_UNIF_ENV	0.4	
CARACT_02	Linear Add	No	Linear Static	DEAD	1.	None
CARACT_02			Linear Static	TESADO	1.1	
CARACT_02			Linear Static	PAVIMENTO	1.	
CARACT_02			Linear Static	BARRERAS	1.	
CARACT_02			Linear Static	PTIERR_CIM	1.	
CARACT_02			Linear Static	RETRYFLU	1.	
CARACT_02			Response Combo	GRAD_TERM	0.6	
CARACT_02			Linear Static	TEMP_UNIF	0.6	
CARACT_02			Response Combo	FRENADO	1.	
CARACT_02			Linear Static	VIENTO	0.6	
CARACT_02			Linear Static	E_TIERRAS	1.	
CARACT_02			Linear Static	E_SC	1.	
CARACT_02			Response Spectrum	SISMO_X	0.	
CARACT_02			Response Spectrum	SISMO_Y	0.	
CARACT_02			Response Spectrum	SISMO_Z	0.	
CARACT_02			Multi-step Static	VP_C1	1.	
CARACT_02			Multi-step Static	VP_C2	1.	
CARACT_02			Response Combo	SC_UNIF_ENV	1.	
PERM	Linear Add	No	Linear Static	DEAD	1.	None
PERM			Linear Static	TESADO	1.	
PERM			Linear Static	PAVIMENTO	1.	
PERM			Linear Static	BARRERAS	1.	
PERM			Linear Static	PTIERR_CIM	1.	
PERM			Moving Load	SC_CARRIL_1	0.	
PERM			Moving Load	SC_CARRIL_2	0.	
PERM			Moving Load	SC_CARRIL_REM	0.	
PERM			Moving Load	VP_CARRIL_1	0.	
PERM			Moving Load	VP_CARRIL_2	0.	
PERM			Linear Static	RETRYFLU	1.	
PERM			Response Combo	GRAD_TERM	0.	
PERM			Linear Static	TEMP_UNIF	0.	
PERM			Response Combo	FRENADO	0.	
PERM			Linear Static	VIENTO	0.	
PERM			Linear Static	E_TIERRAS	1.	
PERM			Linear Static	E_SC	0.	
PERM			Response Spectrum	SISMO_X	0.	
PERM			Response Spectrum	SISMO_Y	0.	
PERM			Response Spectrum	SISMO_Z	0.	

Table: Combination Definitions, Part 2 of 3

Table: Combination Definitions, Part 2 of 3

ComboName	CaseName	ConcDesign	AlumDesign	ColdDesign
FRENADO	FRENADO_1	None	None	None

Table: Combination Definitions, Part 2 of 3

ComboName	CaseName	ConcDesign	AlumDesign	ColdDesign
FRENADO	FRENADO_2			
GRAD_TERM	GRAD_TERM_1	None	None	None
GRAD_TERM	GRAD_TERM_2			
CUASIP	DEAD	None	None	None
CUASIP	TESADO			
CUASIP	PAVIMENTO			
CUASIP	BARRERAS			
CUASIP	PTIERR_CIM			
CUASIP	SC_CARRIL_1			
CUASIP	SC_CARRIL_2			
CUASIP	SC_CARRIL_REM			
CUASIP	VP_CARRIL_1			
CUASIP	VP_CARRIL_2			
CUASIP	RETRYFLU			
CUASIP	GRAD_TERM			
CUASIP	TEMP_UNIF			
CUASIP	FRENADO			
CUASIP	VIENTO			
CUASIP	E_TIERRAS			
CUASIP	E_SC			
CUASIP	SISMO_X			
CUASIP	SISMO_Y			
CUASIP	SISMO_Z			
SC_UNIF_ENV	SC_UNIF_V1	None	None	None
SC_UNIF_ENV	SC_UNIF_V2			
SC_UNIF_ENV	SC_UNIF			
FREC_01	DEAD	None	None	None
FREC_01	TESADO			
FREC_01	PAVIMENTO			
FREC_01	BARRERAS			
FREC_01	PTIERR_CIM			
FREC_01	RETRYFLU			
FREC_01	GRAD_TERM			
FREC_01	TEMP_UNIF			
FREC_01	FRENADO			
FREC_01	VIENTO			
FREC_01	E_TIERRAS			
FREC_01	E_SC			
FREC_01	SISMO_X			
FREC_01	SISMO_Y			
FREC_01	SISMO_Z			
FREC_01	VP_C1			
FREC_01	VP_C2			
FREC_01	SC_UNIF_ENV			
CARACT_01	DEAD	None	None	None
CARACT_01	TESADO			
CARACT_01	PAVIMENTO			
CARACT_01	BARRERAS			
CARACT_01	PTIERR_CIM			
CARACT_01	RETRYFLU			
CARACT_01	GRAD_TERM			
CARACT_01	TEMP_UNIF			
CARACT_01	FRENADO			
CARACT_01	VIENTO			

Table: Combination Definitions, Part 2 of 3

ComboName	CaseName	ConcDesign	AlumDesign	ColdDesign
CARACT_01	E_TIERRAS			
CARACT_01	E_SC			
CARACT_01	SISMO_X			
CARACT_01	SISMO_Y			
CARACT_01	SISMO_Z			
CARACT_01	VP_C1			
CARACT_01	VP_C2			
CARACT_01	SC_UNIF_ENV			
ELU_01	DEAD	None	None	None
ELU_01	TESADO			
ELU_01	PAVIMENTO			
ELU_01	BARRERAS			
ELU_01	PTIERR_CIM			
ELU_01	SC_CARRIL_1			
ELU_01	SC_CARRIL_2			
ELU_01	SC_CARRIL_REM			
ELU_01	VP_CARRIL_1			
ELU_01	VP_CARRIL_2			
ELU_01	RETRYFLU			
ELU_01	GRAD_TERM			
ELU_01	TEMP_UNIF			
ELU_01	FRENADO			
ELU_01	VIENTO			
ELU_01	E_TIERRAS			
ELU_01	E_SC			
ELU_01	SISMO_X			
ELU_01	SISMO_Y			
ELU_01	SISMO_Z			
ELU_02	DEAD	None	None	None
ELU_02	TESADO			
ELU_02	PAVIMENTO			
ELU_02	BARRERAS			
ELU_02	PTIERR_CIM			
ELU_02	SC_CARRIL_1			
ELU_02	SC_CARRIL_2			
ELU_02	SC_CARRIL_REM			
ELU_02	VP_CARRIL_1			
ELU_02	VP_CARRIL_2			
ELU_02	RETRYFLU			
ELU_02	GRAD_TERM			
ELU_02	TEMP_UNIF			
ELU_02	FRENADO			
ELU_02	VIENTO			
ELU_02	E_TIERRAS			
ELU_02	E_SC			
ELU_02	SISMO_X			
ELU_02	SISMO_Y			
ELU_02	SISMO_Z			
ELU_SIS_X	DEAD	None	None	None
ELU_SIS_X	TESADO			
ELU_SIS_X	PAVIMENTO			
ELU_SIS_X	BARRERAS			
ELU_SIS_X	PTIERR_CIM			
ELU_SIS_X	SC_CARRIL_1			

Table: Combination Definitions, Part 2 of 3

ComboName	CaseName	ConcDesign	AlumDesign	ColdDesign
ELU_SIS_X	SC_CARRIL_2			
ELU_SIS_X	SC_CARRIL_REM			
ELU_SIS_X	VP_CARRIL_1			
ELU_SIS_X	VP_CARRIL_2			
ELU_SIS_X	RETRYFLU			
ELU_SIS_X	GRAD_TERM			
ELU_SIS_X	TEMP_UNIF			
ELU_SIS_X	FRENADO			
ELU_SIS_X	VIENTO			
ELU_SIS_X	E_TIERRAS			
ELU_SIS_X	E_SC			
ELU_SIS_X	SISMO_X			
ELU_SIS_X	SISMO_Y			
ELU_SIS_X	SISMO_Z			
ELU_SIS_Y	DEAD	None	None	None
ELU_SIS_Y	TESADO			
ELU_SIS_Y	PAVIMENTO			
ELU_SIS_Y	BARRERAS			
ELU_SIS_Y	PTIERR_CIM			
ELU_SIS_Y	SC_CARRIL_1			
ELU_SIS_Y	SC_CARRIL_2			
ELU_SIS_Y	SC_CARRIL_REM			
ELU_SIS_Y	VP_CARRIL_1			
ELU_SIS_Y	VP_CARRIL_2			
ELU_SIS_Y	RETRYFLU			
ELU_SIS_Y	GRAD_TERM			
ELU_SIS_Y	TEMP_UNIF			
ELU_SIS_Y	FRENADO			
ELU_SIS_Y	VIENTO			
ELU_SIS_Y	E_TIERRAS			
ELU_SIS_Y	E_SC			
ELU_SIS_Y	SISMO_X			
ELU_SIS_Y	SISMO_Y			
ELU_SIS_Y	SISMO_Z			
ELU_SIS_Z	DEAD	None	None	None
ELU_SIS_Z	TESADO			
ELU_SIS_Z	PAVIMENTO			
ELU_SIS_Z	BARRERAS			
ELU_SIS_Z	PTIERR_CIM			
ELU_SIS_Z	SC_CARRIL_1			
ELU_SIS_Z	SC_CARRIL_2			
ELU_SIS_Z	SC_CARRIL_REM			
ELU_SIS_Z	VP_CARRIL_1			
ELU_SIS_Z	VP_CARRIL_2			
ELU_SIS_Z	RETRYFLU			
ELU_SIS_Z	GRAD_TERM			
ELU_SIS_Z	TEMP_UNIF			
ELU_SIS_Z	FRENADO			
ELU_SIS_Z	VIENTO			
ELU_SIS_Z	E_TIERRAS			
ELU_SIS_Z	E_SC			
ELU_SIS_Z	SISMO_X			
ELU_SIS_Z	SISMO_Y			
ELU_SIS_Z	SISMO_Z			

Table: Combination Definitions, Part 2 of 3

ComboName	CaseName	ConcDesign	AlumDesign	ColdDesign
FREC_02	DEAD	None	None	None
FREC_02	TESADO			
FREC_02	PAVIMENTO			
FREC_02	BARRERAS			
FREC_02	PTIERR_CIM			
FREC_02	RETRYFLU			
FREC_02	GRAD_TERM			
FREC_02	TEMP_UNIF			
FREC_02	FRENADO			
FREC_02	VIENTO			
FREC_02	E_TIERRAS			
FREC_02	E_SC			
FREC_02	SISMO_X			
FREC_02	SISMO_Y			
FREC_02	SISMO_Z			
FREC_02	VP_C1			
FREC_02	VP_C2			
FREC_02	SC_UNIF_ENV			
CARACT_02	DEAD	None	None	None
CARACT_02	TESADO			
CARACT_02	PAVIMENTO			
CARACT_02	BARRERAS			
CARACT_02	PTIERR_CIM			
CARACT_02	RETRYFLU			
CARACT_02	GRAD_TERM			
CARACT_02	TEMP_UNIF			
CARACT_02	FRENADO			
CARACT_02	VIENTO			
CARACT_02	E_TIERRAS			
CARACT_02	E_SC			
CARACT_02	SISMO_X			
CARACT_02	SISMO_Y			
CARACT_02	SISMO_Z			
CARACT_02	VP_C1			
CARACT_02	VP_C2			
CARACT_02	SC_UNIF_ENV			
PERM	DEAD	None	None	None
PERM	TESADO			
PERM	PAVIMENTO			
PERM	BARRERAS			
PERM	PTIERR_CIM			
PERM	SC_CARRIL_1			
PERM	SC_CARRIL_2			
PERM	SC_CARRIL_REM			
PERM	VP_CARRIL_1			
PERM	VP_CARRIL_2			
PERM	RETRYFLU			
PERM	GRAD_TERM			
PERM	TEMP_UNIF			
PERM	FRENADO			
PERM	VIENTO			
PERM	E_TIERRAS			
PERM	E_SC			
PERM	SISMO_X			

Table: Combination Definitions, Part 2 of 3

ComboName	CaseName	ConcDesign	AlumDesign	ColdDesign
PERM	SISMO_Y			
PERM	SISMO_Z			

Table: Combination Definitions, Part 3 of 3

Table: Combination Definitions, Part 3 of 3

ComboName	CaseName	GUID	Notes
FRENADO	FRENADO_1	4f7a0387-1566-48ff-b2ea-3ac882b31f85	
FRENADO	FRENADO_2		
GRAD_TERM	GRAD_TERM_1	4f7a0387-1566-48ff-b2ea-3ac882b31f85	
GRAD_TERM	GRAD_TERM_2		
CUASIP	DEAD	4f7a0387-1566-48ff-b2ea-3ac882b31f85	
CUASIP	TESADO		
CUASIP	PAVIMENTO		
CUASIP	BARRERAS		
CUASIP	PTIERR_CIM		
CUASIP	SC_CARRIL_1		
CUASIP	SC_CARRIL_2		
CUASIP	SC_CARRIL_REM		
CUASIP	VP_CARRIL_1		
CUASIP	VP_CARRIL_2		
CUASIP	RETRYFLU		
CUASIP	GRAD_TERM		
CUASIP	TEMP_UNIF		
CUASIP	FRENADO		
CUASIP	VIENTO		
CUASIP	E_TIERRAS		
CUASIP	E_SC		
CUASIP	SISMO_X		
CUASIP	SISMO_Y		
CUASIP	SISMO_Z		
SC_UNIF_ENV	SC_UNIF_V1	4f7a0387-1566-48ff-b2ea-3ac882b31f85	
SC_UNIF_ENV	SC_UNIF_V2		
SC_UNIF_ENV	SC_UNIF		
FREC_01	DEAD		
FREC_01	TESADO		
FREC_01	PAVIMENTO		
FREC_01	BARRERAS		
FREC_01	PTIERR_CIM		
FREC_01	RETRYFLU		
FREC_01	GRAD_TERM		
FREC_01	TEMP_UNIF		
FREC_01	FRENADO		
FREC_01	VIENTO		
FREC_01	E_TIERRAS		
FREC_01	E_SC		
FREC_01	SISMO_X		
FREC_01	SISMO_Y		
FREC_01	SISMO_Z		

Table: Combination Definitions, Part 3 of 3

ComboName	CaseName	GUID	Notes
FREC_01	VP_C1		
FREC_01	VP_C2		
FREC_01	SC_UNIF_ENV		
CARACT_01	DEAD		
CARACT_01	TESADO		
CARACT_01	PAVIMENTO		
CARACT_01	BARRERAS		
CARACT_01	PTIERR_CIM		
CARACT_01	RETRYFLU		
CARACT_01	GRAD_TERM		
CARACT_01	TEMP_UNIF		
CARACT_01	FRENADO		
CARACT_01	VIENTO		
CARACT_01	E_TIERRAS		
CARACT_01	E_SC		
CARACT_01	SISMO_X		
CARACT_01	SISMO_Y		
CARACT_01	SISMO_Z		
CARACT_01	VP_C1		
CARACT_01	VP_C2		
CARACT_01	SC_UNIF_ENV		
ELU_01	DEAD		
ELU_01	TESADO		
ELU_01	PAVIMENTO		
ELU_01	BARRERAS		
ELU_01	PTIERR_CIM		
ELU_01	SC_CARRIL_1		
ELU_01	SC_CARRIL_2		
ELU_01	SC_CARRIL_REM		
ELU_01	VP_CARRIL_1		
ELU_01	VP_CARRIL_2		
ELU_01	RETRYFLU		
ELU_01	GRAD_TERM		
ELU_01	TEMP_UNIF		
ELU_01	FRENADO		
ELU_01	VIENTO		
ELU_01	E_TIERRAS		
ELU_01	E_SC		
ELU_01	SISMO_X		
ELU_01	SISMO_Y		
ELU_01	SISMO_Z		
ELU_02	DEAD		
ELU_02	TESADO		
ELU_02	PAVIMENTO		
ELU_02	BARRERAS		
ELU_02	PTIERR_CIM		
ELU_02	SC_CARRIL_1		
ELU_02	SC_CARRIL_2		
ELU_02	SC_CARRIL_REM		
ELU_02	VP_CARRIL_1		
ELU_02	VP_CARRIL_2		
ELU_02	RETRYFLU		
ELU_02	GRAD_TERM		
ELU_02	TEMP_UNIF		

Table: Combination Definitions, Part 3 of 3

ComboName	CaseName	GUID	Notes
ELU_02	FRENADO		
ELU_02	VIENTO		
ELU_02	E_TIERRAS		
ELU_02	E_SC		
ELU_02	SISMO_X		
ELU_02	SISMO_Y		
ELU_02	SISMO_Z		
ELU_SIS_X	DEAD		
ELU_SIS_X	TESADO		
ELU_SIS_X	PAVIMENTO		
ELU_SIS_X	BARRERAS		
ELU_SIS_X	PTIERR_CIM		
ELU_SIS_X	SC_CARRIL_1		
ELU_SIS_X	SC_CARRIL_2		
ELU_SIS_X	SC_CARRIL_REM		
ELU_SIS_X	VP_CARRIL_1		
ELU_SIS_X	VP_CARRIL_2		
ELU_SIS_X	RETRYFLU		
ELU_SIS_X	GRAD_TERM		
ELU_SIS_X	TEMP_UNIF		
ELU_SIS_X	FRENADO		
ELU_SIS_X	VIENTO		
ELU_SIS_X	E_TIERRAS		
ELU_SIS_X	E_SC		
ELU_SIS_X	SISMO_X		
ELU_SIS_X	SISMO_Y		
ELU_SIS_X	SISMO_Z		
ELU_SIS_Y	DEAD	488f4c94-a35e-4258-a4df-633138f7f29c	
ELU_SIS_Y	TESADO		
ELU_SIS_Y	PAVIMENTO		
ELU_SIS_Y	BARRERAS		
ELU_SIS_Y	PTIERR_CIM		
ELU_SIS_Y	SC_CARRIL_1		
ELU_SIS_Y	SC_CARRIL_2		
ELU_SIS_Y	SC_CARRIL_REM		
ELU_SIS_Y	VP_CARRIL_1		
ELU_SIS_Y	VP_CARRIL_2		
ELU_SIS_Y	RETRYFLU		
ELU_SIS_Y	GRAD_TERM		
ELU_SIS_Y	TEMP_UNIF		
ELU_SIS_Y	FRENADO		
ELU_SIS_Y	VIENTO		
ELU_SIS_Y	E_TIERRAS		
ELU_SIS_Y	E_SC		
ELU_SIS_Y	SISMO_X		
ELU_SIS_Y	SISMO_Y		
ELU_SIS_Y	SISMO_Z		
ELU_SIS_Z	DEAD	716e3b06-1a0c-4d51-8085-6306c1d6fe20	
ELU_SIS_Z	TESADO		
ELU_SIS_Z	PAVIMENTO		
ELU_SIS_Z	BARRERAS		
ELU_SIS_Z	PTIERR_CIM		
ELU_SIS_Z	SC_CARRIL_1		

Table: Combination Definitions, Part 3 of 3

ComboName	CaseName	GUID	Notes
ELU_SIS_Z	SC_CARRIL_2		
ELU_SIS_Z	SC_CARRIL_REM		
ELU_SIS_Z	VP_CARRIL_1		
ELU_SIS_Z	VP_CARRIL_2		
ELU_SIS_Z	RETRYFLU		
ELU_SIS_Z	GRAD_TERM		
ELU_SIS_Z	TEMP_UNIF		
ELU_SIS_Z	FRENADO		
ELU_SIS_Z	VIENTO		
ELU_SIS_Z	E_TIERRAS		
ELU_SIS_Z	E_SC		
ELU_SIS_Z	SISMO_X		
ELU_SIS_Z	SISMO_Y		
ELU_SIS_Z	SISMO_Z		
FREC_02	DEAD		
FREC_02	TESADO		
FREC_02	PAVIMENTO		
FREC_02	BARRERAS		
FREC_02	PTIERR_CIM		
FREC_02	RETRYFLU		
FREC_02	GRAD_TERM		
FREC_02	TEMP_UNIF		
FREC_02	FRENADO		
FREC_02	VIENTO		
FREC_02	E_TIERRAS		
FREC_02	E_SC		
FREC_02	SISMO_X		
FREC_02	SISMO_Y		
FREC_02	SISMO_Z		
FREC_02	VP_C1		
FREC_02	VP_C2		
FREC_02	SC_UNIF_ENV		
CARACT_02	DEAD		
CARACT_02	TESADO		
CARACT_02	PAVIMENTO		
CARACT_02	BARRERAS		
CARACT_02	PTIERR_CIM		
CARACT_02	RETRYFLU		
CARACT_02	GRAD_TERM		
CARACT_02	TEMP_UNIF		
CARACT_02	FRENADO		
CARACT_02	VIENTO		
CARACT_02	E_TIERRAS		
CARACT_02	E_SC		
CARACT_02	SISMO_X		
CARACT_02	SISMO_Y		
CARACT_02	SISMO_Z		
CARACT_02	VP_C1		
CARACT_02	VP_C2		
CARACT_02	SC_UNIF_ENV		
PERM	DEAD	4f7a0387-1566-48ff-b2ea-3ac882b31f85	
PERM	TESADO		
PERM	PAVIMENTO		

Table: Combination Definitions, Part 3 of 3

ComboName	CaseName	GUID	Notes
PERM	BARRERAS		
PERM	PTIERR_CIM		
PERM	SC_CARRIL_1		
PERM	SC_CARRIL_2		
PERM	SC_CARRIL_REM		
PERM	VP_CARRIL_1		
PERM	VP_CARRIL_2		
PERM	RETRYFLU		
PERM	GRAD_TERM		
PERM	TEMP_UNIF		
PERM	FRENADO		
PERM	VIENTO		
PERM	E_TIERRAS		
PERM	E_SC		
PERM	SISMO_X		
PERM	SISMO_Y		
PERM	SISMO_Z		

Table: Connectivity - Frame, Part 1 of 2

Table: Connectivity - Frame, Part 1 of 2

Frame	JointI	JointJ	IsCurved	Length	CentroidX	CentroidY	CentroidZ
				m	m	m	m
1	1	2	No	69.	34.5	0.	0.
3	23	21	No	7.5	34.5	-1.25	-5.65
4	22	20	No	7.5	34.5	1.25	-5.65
5	25	24	No	1.4	34.5	0.	-10.1
6	37	38	No	10.1	0.15	0.	-2.75
7	48	49	No	10.1	68.85	0.	-2.75
8	70	56	No	6.8	0.35	-4.2	-6.85
9	69	54	No	6.8	0.35	-1.4	-6.85
10	67	50	No	6.8	0.35	1.4	-6.85
11	68	52	No	6.8	0.35	4.2	-6.85
12	74	66	No	6.8	68.65	-4.2	-6.85
13	73	64	No	6.8	68.65	-1.4	-6.85
14	71	60	No	6.8	68.65	1.4	-6.85
15	72	62	No	6.8	68.65	4.2	-6.85
16	75	76	No	10.6	68.65	-8.882E-16	-10.25
17	77	79	No	10.6	0.35	-8.882E-16	-10.25

Table: Connectivity - Frame, Part 2 of 2

Table: Connectivity - Frame, Part 2 of 2

Frame	GUID
1	462ce831-1d1f-4549-b5b a-b09d44611e6a
3	425b6732-2dde-469f-8c8 2-83c65810ef27
4	1cd3aae2-6f90-4924-a34 5-c055798c7b8b
5	32ebe64e-fab8-44e3-b9b b-a1edca920b3b

Table: Connectivity - Frame, Part 2 of 2

Frame	GUID
6	f634616d-9f12-47be-8a1 a-ad4b5ba365ae
7	8a35b9f7-9ee7-403c-a50 e-b7398b9357da
8	62537cf7-a735-416f-800f -866b423bf406
9	05a4b5cb-c64c-48b2-9a ba-9054172a5991
10	f4cba9bd-438c-4183-85c 8-e8310c73f0ca
11	989c3a89-d734-4b28-95 1f-f52f090191b2
12	f52f6aba-79d4-4d66-98bf -40a83226eeb0
13	4b746a93-b1be-49c0-90 11-98899959d5da
14	2ee3e8a7-0542-49f0-bdd 4-8ec21c4084fb
15	697a1187-6a34-4c6f-885 f-4eee4b410c6c
16	311d32cb-9592-46da-ab 0e-dcb394f9c06e
17	ad026b8a-eb96-4c54-82f e-630760abbbf4

Table: Connectivity - Link, Part 1 of 2

Table: Connectivity - Link, Part 1 of 2

Link	JointI	JointJ	Length	CentroidX	CentroidY	CentroidZ
			m	m	m	m
1	13	6	0.4	0.5	-2.55	-1.85
2	11	4	0.4	0.5	0.	-1.85
3	12	5	0.4	0.5	2.55	-1.85
4	16	10	0.4	68.5	-2.55	-1.85
5	14	8	0.4	68.5	0.	-1.85
6	15	9	0.4	68.5	2.55	-1.85
7	20	18	0.3	34.5	1.25	-1.75
8	21	19	0.3	34.5	-1.25	-1.75
9	22	24	1.25	34.5	0.625	-9.4
10	23	24	1.25	34.5	-0.625	-9.4
11	14	45	0.78262	68.675	0.	-2.4
12	16	47	0.78262	68.675	-2.55	-2.4
13	15	46	0.78262	68.675	2.55	-2.4
15	11	34	0.78262	0.325	0.	-2.4
16	13	36	0.78262	0.325	-2.55	-2.4
17	53	52	0.72801	0.25	4.2	-3.1
18	51	50	0.72801	0.25	1.4	-3.1
19	55	54	0.72801	0.25	-1.4	-3.1
20	57	56	0.72801	0.25	-4.2	-3.1
21	62	61	0.72801	68.75	4.2	-3.1
22	60	59	0.72801	68.75	1.4	-3.1
23	64	63	0.72801	68.75	-1.4	-3.1
24	66	65	0.72801	68.75	-4.2	-3.1
25	70	83	4.83322	1.35	-4.2	-12.45
26	70	91	4.83322	-0.65	-4.2	-12.45
27	69	82	4.83322	1.35	-1.4	-12.45

Table: Connectivity - Link, Part 1 of 2

Link	JointI	JointJ	Length	CentroidX	CentroidY	CentroidZ
			m	m	m	m
28	69	90	4.83322	-0.65	-1.4	-12.45
29	67	80	4.83322	1.35	1.4	-12.45
30	67	88	4.83322	-0.65	1.4	-12.45
31	68	81	4.83322	1.35	4.2	-12.45
32	68	89	4.83322	-0.65	4.2	-12.45
33	74	87	4.83322	69.65	-4.2	-12.45
34	74	95	4.83322	67.65	-4.2	-12.45
35	73	86	4.83322	69.65	-1.4	-12.45
36	73	94	4.83322	67.65	-1.4	-12.45
37	71	84	4.83322	69.65	1.4	-12.45
38	71	92	4.83322	67.65	1.4	-12.45
39	72	85	4.83322	69.65	4.2	-12.45
40	72	93	4.83322	67.65	4.2	-12.45
41	35	12	0.78262	0.325	2.55	-2.4

Table: Connectivity - Link, Part 2 of 2

Table: Connectivity - Link, Part 2 of 2

Link	GUID
1	8075130b-b05e-475e-9a44-82193b9279fd
2	8075130b-b05e-475e-9a44-82193b9279fd
3	8075130b-b05e-475e-9a44-82193b9279fd
4	8075130b-b05e-475e-9a44-82193b9279fd
5	8075130b-b05e-475e-9a44-82193b9279fd
6	8075130b-b05e-475e-9a44-82193b9279fd
7	8075130b-b05e-475e-9a44-82193b9279fd
8	8075130b-b05e-475e-9a44-82193b9279fd
9	b8e618f8-d88d-49b4-8f76-0f37eae9e72d
10	b8e618f8-d88d-49b4-8f76-0f37eae9e72d
11	b8e618f8-d88d-49b4-8f76-0f37eae9e72d
12	b8e618f8-d88d-49b4-8f76-0f37eae9e72d
13	b8e618f8-d88d-49b4-8f76-0f37eae9e72d
15	b8e618f8-d88d-49b4-8f76-0f37eae9e72d
16	b8e618f8-d88d-49b4-8f76-0f37eae9e72d
17	b8e618f8-d88d-49b4-8f76-0f37eae9e72d
18	b8e618f8-d88d-49b4-8f76-0f37eae9e72d
19	b8e618f8-d88d-49b4-8f76-0f37eae9e72d

Table: Connectivity - Link, Part 2 of 2

Link	GUID
20	b8e618f8-d88d-49b4-8f76-0f37eae9e72d
21	b8e618f8-d88d-49b4-8f76-0f37eae9e72d
22	b8e618f8-d88d-49b4-8f76-0f37eae9e72d
23	b8e618f8-d88d-49b4-8f76-0f37eae9e72d
24	b8e618f8-d88d-49b4-8f76-0f37eae9e72d
25	b8e618f8-d88d-49b4-8f76-0f37eae9e72d
26	b8e618f8-d88d-49b4-8f76-0f37eae9e72d
27	b8e618f8-d88d-49b4-8f76-0f37eae9e72d
28	b8e618f8-d88d-49b4-8f76-0f37eae9e72d
29	b8e618f8-d88d-49b4-8f76-0f37eae9e72d
30	b8e618f8-d88d-49b4-8f76-0f37eae9e72d
31	b8e618f8-d88d-49b4-8f76-0f37eae9e72d
32	b8e618f8-d88d-49b4-8f76-0f37eae9e72d
33	b8e618f8-d88d-49b4-8f76-0f37eae9e72d
34	b8e618f8-d88d-49b4-8f76-0f37eae9e72d
35	b8e618f8-d88d-49b4-8f76-0f37eae9e72d
36	b8e618f8-d88d-49b4-8f76-0f37eae9e72d
37	b8e618f8-d88d-49b4-8f76-0f37eae9e72d
38	b8e618f8-d88d-49b4-8f76-0f37eae9e72d
39	b8e618f8-d88d-49b4-8f76-0f37eae9e72d
40	b8e618f8-d88d-49b4-8f76-0f37eae9e72d
41	b8e618f8-d88d-49b4-8f76-0f37eae9e72d

Table: Connectivity - Tendon

Table: Connectivity - Tendon

Tendon	JointI	JointJ	Length	GUID
			m	
2	1	2	69.07542	b3061602-862a-412e-bb41-59da90b5375b

Table: Constraint Definitions - Body

Table: Constraint Definitions - Body

Name	CoordSys	UX	UY	UZ	RX	RY	RZ
E1	GLOBAL	Yes	Yes	Yes	Yes	Yes	Yes
E2	GLOBAL	Yes	Yes	Yes	Yes	Yes	Yes
PILA	GLOBAL	Yes	Yes	Yes	Yes	Yes	Yes
ENCEPADO_P1	GLOBAL	Yes	Yes	Yes	Yes	Yes	Yes

Table: Frame Auto Mesh Assignments

Table: Frame Auto Mesh Assignments

Frame	AutoMesh	AtJoints	AtFrames	NumSegments	MaxLength	MaxDegrees
					m	Degrees
1	Yes	Yes	Yes	0	1.	0.
3	Yes	Yes	Yes	0	1.	0.
4	Yes	Yes	Yes	0	1.	0.
5	Yes	Yes	Yes	0	1.	0.
6	Yes	Yes	Yes	0	1.	0.
7	Yes	Yes	Yes	0	1.	0.
8	Yes	Yes	Yes	0	1.	0.
9	Yes	Yes	Yes	0	1.	0.
10	Yes	Yes	Yes	0	1.	0.
11	Yes	Yes	Yes	0	1.	0.
12	Yes	Yes	Yes	0	1.	0.
13	Yes	Yes	Yes	0	1.	0.
14	Yes	Yes	Yes	0	1.	0.
15	Yes	Yes	Yes	0	1.	0.
16	Yes	Yes	Yes	0	1.	0.
17	Yes	Yes	Yes	0	1.	0.

Table: Frame Design Procedures

Table: Frame Design Procedures

Frame	DesignProc
1	No Design
3	From Material
4	From Material
5	From Material
6	From Material
7	From Material
8	From Material
9	From Material
10	From Material
11	From Material

Table: Frame Design Procedures

Frame	DesignProc
12	From Material
13	From Material
14	From Material
15	From Material
16	From Material
17	From Material

Table: Frame Insertion Point Assignments

Table: Frame Insertion Point Assignments

Frame	CardinalPt	Mirror2	Mirror3	Transform
1	8 (top center)	No	No	Yes
3	10 (centroid)	No	No	Yes
4	10 (centroid)	No	No	Yes
5	10 (centroid)	No	No	Yes
6	10 (centroid)	No	No	Yes
7	10 (centroid)	No	No	Yes
8	10 (centroid)	No	No	Yes
9	10 (centroid)	No	No	Yes
10	10 (centroid)	No	No	Yes
11	10 (centroid)	No	No	Yes
12	10 (centroid)	No	No	Yes
13	10 (centroid)	No	No	Yes
14	10 (centroid)	No	No	Yes
15	10 (centroid)	No	No	Yes
16	8 (top center)	No	No	Yes
17	10 (centroid)	No	No	Yes

Table: Frame Loads - Distributed, Part 1 of 3

Table: Frame Loads - Distributed, Part 1 of 3

Frame	LoadPat	CoordSys	Type	Dir	DistType	RelDistA
1	PAVIMENTO	GLOBAL	Force	Gravity	RelDist	0.
1	BARRERAS	GLOBAL	Force	Gravity	RelDist	0.
1	FRENADO_1	GLOBAL	Force	X	RelDist	0.
1	FRENADO_2	GLOBAL	Force	X	RelDist	0.
1	VIENTO	GLOBAL	Force	Y	RelDist	0.
1	SC_UNIF_V1	GLOBAL	Force	Gravity	RelDist	0.
1	SC_UNIF_V2	GLOBAL	Force	Gravity	RelDist	0.5
1	SC_UNIF	GLOBAL	Force	Gravity	RelDist	0.
3	VIENTO	GLOBAL	Force	Y	RelDist	0.
4	VIENTO	GLOBAL	Force	Y	RelDist	0.
6	DEAD	GLOBAL	Force	Gravity	RelDist	0.
6	E_TIERRAS	GLOBAL	Force	X	RelDist	0.
6	E_TIERRAS	GLOBAL	Moment	Y	RelDist	0.
6	E_SC	GLOBAL	Force	X	RelDist	0.

Table: Frame Loads - Distributed, Part 1 of 3

Frame	LoadPat	CoordSys	Type	Dir	DistType	RelDistA
6	E_SC	GLOBAL	Moment	Y	RelDist	0.
7	DEAD	GLOBAL	Force	Gravity	RelDist	0.
7	E_TIERRAS	GLOBAL	Moment	Y	RelDist	0.
7	E_TIERRAS	GLOBAL	Force	X	RelDist	0.
7	E_SC	GLOBAL	Force	X	RelDist	0.
7	E_SC	GLOBAL	Moment	Y	RelDist	0.
16	PTIERR_CIM	GLOBAL	Force	Gravity	RelDist	0.
17	PTIERR_CIM	GLOBAL	Force	Gravity	RelDist	0.

Table: Frame Loads - Distributed, Part 2 of 3

Table: Frame Loads - Distributed, Part 2 of 3

Frame	LoadPat	RelDistB	AbsDistA	AbsDistB	FOverLA	FOverLB	MOverLA
			m	m	KN/m	KN/m	KN-m/m
1	PAVIMENTO	1.	0.	69.	13.8	13.8	
1	BARRERAS	1.	0.	69.	14.	14.	
1	FRENADO_1	1.	0.	69.	7.92	7.92	
1	FRENADO_2	1.	0.	69.	-7.92	-7.92	
1	VIENTO	1.	0.	69.	-6.29	-6.29	
1	SC_UNIF_V1	0.5	0.	34.5	39.5	39.5	
1	SC_UNIF_V2	1.	34.5	69.	39.5	39.5	
1	SC_UNIF	1.	0.	69.	39.5	39.5	
3	VIENTO	1.	0.	7.5	-2.3	-2.3	
4	VIENTO	1.	0.	7.5	-2.3	-2.3	
6	DEAD	1.	0.	10.1	14.44	14.44	
6	E_TIERRAS	1.	0.	10.1	33.07	33.07	
6	E_TIERRAS	1.	0.	10.1			13.5587
6	E_SC	1.	0.	10.1	11.06	11.06	
6	E_SC	1.	0.	10.1			10.618
7	DEAD	1.	0.	10.1	14.44	14.44	
7	E_TIERRAS	1.	0.	10.1			-13.559
7	E_TIERRAS	1.	0.	10.1	-33.07	-33.07	
7	E_SC	1.	0.	10.1	-11.06	-11.06	
7	E_SC	1.	0.	10.1			-10.6176
16	PTIERR_CIM	1.	0.	10.6	891.	891.	
17	PTIERR_CIM	1.	0.	10.6	891.	891.	

Table: Frame Loads - Distributed, Part 3 of 3

Table: Frame Loads - Distributed, Part 3 of 3

Frame	LoadPat	MOverLB	GUID
		KN-m/m	
1	PAVIMENTO		19f559f8-c43b-47ef-9ada-ce09d8ff07b6
1	BARRERAS		706272c9-cc48-460d-9f35-8525523eef6d
1	FRENADO_1		68216e83-1e78-4619-96ba-c3e9cd68eb9a
1	FRENADO_2		31977737-a545-4696-887d-0aed60e49851
1	VIENTO		f52aed83-0a88-41d0-8cb4-af390eee1f6a
1	SC_UNIF_V1		e17a399e-7852-44b2-93fc-104517d98312

Table: Frame Loads - Distributed, Part 3 of 3

Frame	LoadPat	MOverLB	GUID
		KN-m/m	
1	SC_UNIF_V2		265725a3-818d-4006-ab56-c121cbf4cdbf
1	SC_UNIF		da00f67d-1717-4758-8758-013b0d606c7e
3	VIENTO		6c207240-5e6a-48ce-b44d-d217d2d91b29
4	VIENTO		7809fbfb-75f4-4927-b182-f7670d6eba01
6	DEAD		128c9645-e63f-418e-9685-5ea10fff1f9a
6	E_TIERRAS		45d54089-ec73-4e64-8ddd-9c3136058232
6	E_TIERRAS	13.5587	ab5e989a-e614-4e5c-9720-bc0f5280fa92
6	E_SC		98eb8fc7-0346-45fe-911d-6cca7ee8915d
6	E_SC	10.618	25795efb-8347-454e-996d-949b90f13af2
7	DEAD		175d0631-fdcd-4898-91fd-ffe3ec0b9891
7	E_TIERRAS	-13.559	cefab42d-f60b-4507-a6aa-69f195564ee8
7	E_TIERRAS		b6d23322-818e-41af-8270-07633fa6a0d3
7	E_SC		c9bef198-fc36-401b-9779-590d943f491c
7	E_SC	-10.6176	5783a6cf-4c4e-48c4-8496-ddc3b9833e77
16	PTIERR_CIM		d0935c87-a2f4-4fd1-8179-4f272e376fe5
17	PTIERR_CIM		0aee1b08-7b96-41fb-94ee-1f8ace641f5b

Table: Frame Loads - Temperature

Table: Frame Loads - Temperature

Frame	LoadPat	Type	Temp	TempGrad2	JtPattern
			C	C/m	
1	RETRYFLU	Temperature	-71.7		None
1	GRAD_TERM_1	Gradient2		9.09	None
1	TEMP_UNIF	Temperature	-15.8		None
1	GRAD_TERM_2	Gradient2		-4.85	None

Table: Frame Section Assignments, Part 1 of 2

Table: Frame Section Assignments, Part 1 of 2

Frame	SectionType	AutoSelect	AnalSect	DesignSect	MatProp
1	Nonprismatic	N.A.	TABLERO	N.A.	Default
3	Circular	N.A.	FUSTE_100	FUSTE_100	Default
4	Circular	N.A.	FUSTE_100	FUSTE_100	Default
5	Rectangular	N.A.	PILA_ENCEPADO	PILA_ENCEPADO	Default
6	Rectangular	N.A.	ESTRIBO_CARGADERO	ESTRIBO_CARGADERO	Default
7	Rectangular	N.A.	ESTRIBO_CARGADERO	ESTRIBO_CARGADERO	Default

Table: Frame Section Assignments, Part 1 of 2

Frame	SectionType	AutoSelect	AnalSect	DesignSect	MatProp
8	Circular	N.A.	FUSTE_120	FUSTE_120	Default
9	Circular	N.A.	FUSTE_120	FUSTE_120	Default
10	Circular	N.A.	FUSTE_120	FUSTE_120	Default
11	Circular	N.A.	FUSTE_120	FUSTE_120	Default
12	Circular	N.A.	FUSTE_120	FUSTE_120	Default
13	Circular	N.A.	FUSTE_120	FUSTE_120	Default
14	Circular	N.A.	FUSTE_120	FUSTE_120	Default
15	Circular	N.A.	FUSTE_120	FUSTE_120	Default
16	Rectangular	N.A.	ESTRIBO_ENCEPADO	ESTRIBO_ENCEPADO	Default
17	Rectangular	N.A.	ESTRIBO_ENCEPADO	ESTRIBO_ENCEPADO	Default

Table: Frame Section Assignments, Part 2 of 2

Table: Frame Section Assignments, Part 2 of 2

Frame	NPSectType	NPSectLen	NPSectRD
		m	
1	Default		
3			
4			
5			
6			
7			
8			
9			
10			
11			
12			
13			
14			
15			
16			
17			

Table: Frame Section Properties 01 - General, Part 1 of 6

Table: Frame Section Properties 01 - General, Part 1 of 6

SectionName	Material	Shape	t3	t2	Area	TorsConst
			m	m	m2	m4
ESTRIBO_CARGADERO	HA-30	Rectangular	1.4	2.	2.8	1.038739
ESTRIBO_ENCEPADO	HA-30	Rectangular	1.4	6.	8.4	4.681463
FUSTE_100	HA-30	Circle	1.		0.785398	0.098175
FUSTE_120	HA-30	Circle	1.2		1.130973	0.203575
PILA_ENCEPADO	HA-30	Rectangular	4.85	7.15	34.6775	157.755788
PILOTE_100	HA-30	Circle	1.		0.785398	0.098175
TAB_ALIG	HP-40	SD Section			6.571566	4.691815
TAB_MAZ	HP-40	SD Section			8.91265	5.386188
TAB_RIOSTRA	HP-40	SD Section			11.552409	8.242563
TABLERO		Nonprismatic				

Table: Frame Section Properties 01 - General, Part 2 of 6

Table: Frame Section Properties 01 - General, Part 2 of 6

SectionName	I33	I22	I23	AS2	AS3	S33	S22
	m4	m4	m4	m2	m2	m3	m3
ESTRIBO_CARGADERO	0.457333	0.933333	0.	2.333333	2.333333	0.653333	0.933333
ESTRIBO_ENCEPADO	1.372	25.2	0.	7.	7.	1.96	8.4
FUSTE_100	0.049087	0.049087	0.	0.706858	0.706858	0.098175	0.098175
FUSTE_120	0.101788	0.101788	0.	1.017876	1.017876	0.169646	0.169646
PILA_ENCEPADO	67.975124	147.733374	0.	28.897917	28.897917	28.030979	41.324021
PILOTE_100	0.049087	0.049087	0.	0.706858	0.706858	0.098175	0.098175
TAB_ALIG	1.824213	27.281006	0.	3.532891	5.45013	1.882971	5.866883
TAB_MAZ	2.005285	29.943676	0.	7.235561	8.312164	2.153848	6.4395
TAB_RIOSTRA	2.539427	51.639088	0.	9.824176	10.185104	2.946586	11.10518
TABLERO							

Table: Frame Section Properties 01 - General, Part 3 of 6

Table: Frame Section Properties 01 - General, Part 3 of 6

SectionName	Z33	Z22	R33	R22	ConcCol	ConcBeam	Color
	m3	m3	m	m			
ESTRIBO_CARGADERO	0.98	1.4	0.404145	0.57735	Yes	No	Yellow
ESTRIBO_ENCEPADO	2.94	12.6	0.404145	1.732051	Yes	No	Blue
FUSTE_100	0.166667	0.166667	0.25	0.25	Yes	No	Green
FUSTE_120	0.288	0.288	0.3	0.3	Yes	No	Red
PILA_ENCEPADO	42.046469	61.986031	1.400074	2.064027	Yes	No	Cyan
PILOTE_100	0.166667	0.166667	0.25	0.25	Yes	No	Yellow
TAB_ALIG	2.986095	11.247055	0.52687	2.037491	No	No	Cyan
TAB_MAZ	3.668632	13.394238	0.474334	1.832944	No	No	Magenta
TAB_RIOSTRA	4.698339	20.8974	0.468847	2.114234	No	No	Gray8Dark
TABLERO							Gray8Dark

Table: Frame Section Properties 01 - General, Part 4 of 6

Table: Frame Section Properties 01 - General, Part 4 of 6

SectionName	TotalWt	TotalMass	FromFile	AMod	A2Mod	A3Mod	JMod
	KN	KN-s2/m					
ESTRIBO_CARGADERO	1414.	144.19	No	1.	1.	1.	1.
ESTRIBO_ENCEPADO	4452.	453.98	No	1.	1.	1.	1.
FUSTE_100	294.524	30.03	No	1.	1.	1.	1.
FUSTE_120	1538.124	156.84	No	1.	1.	1.	1.
PILA_ENCEPADO	1213.713	123.76	No	1.	1.	1.	1.
PILOTE_100	0.	0.	No	1.	1.	1.	1.
TAB_ALIG	0.	0.	No	1.	1.	1.	1.
TAB_MAZ	0.	0.	No	1.	1.	1.	1.
TAB_RIOSTRA	0.	0.	No	1.	1.	1.	1.
TABLERO	11943.623	1217.91					

Table: Frame Section Properties 01 - General, Part 5 of 6

Table: Frame Section Properties 01 - General, Part 5 of 6

SectionName	I2Mod	I3Mod	MMod	WMod	GUID
ESTRIBO_CARGADERO	1.	1.	1.	1.	
ESTRIBO_ENCEPADO	1.	1.	1.	1.	
FUSTE_100	1.	1.	1.	1.	
FUSTE_120	1.	1.	1.	1.	
PILA_ENCEPADO	1.	1.	1.	1.	
PILOTE_100	1.	1.	1.	1.	
TAB_ALIG	1.	1.	1.	1.	
TAB_MAZ	1.	1.	1.	1.	
TAB_RIOSTRA	1.	1.	1.	1.	
TABLERO					

Table: Frame Section Properties 01 - General, Part 6 of 6

Table: Frame Section Properties 01 - General, Part 6 of 6

SectionName	Notes
ESTRIBO_CARGADERO	Added 05/06/2017 8:57:01
ESTRIBO_ENCEPADO	Added 05/06/2017 9:25:17
FUSTE_100	Added 02/06/2017 12:22:28
FUSTE_120	Added 02/06/2017 12:23:24
PILA_ENCEPADO	Added 05/06/2017 8:33:27
PILOTE_100	Added 02/06/2017 12:24:33
TAB_ALIG	Added 02/06/2017 12:06:41
TAB_MAZ	Added 02/06/2017 12:16:19
TAB_RIOSTRA	Added 02/06/2017 12:17:58
TABLERO	Added 02/06/2017 12:27:22

Table: Frame Section Properties 02 - Concrete Column, Part 1 of 2

Table: Frame Section Properties 02 - Concrete Column, Part 1 of 2

SectionName	RebarMatL	RebarMatC	ReinfConfig	LatReinf	Cover	NumBars3Dir	NumBars2Dir	NumBarsCirc
					m			
ESTRIBO_CARGADERO	B500S	B500S	Rectangular	Ties	0.04	3	3	
ESTRIBO_ENCEPADO	B500S	B500S	Rectangular	Ties	0.04	3	3	
FUSTE_100	B500S	B500S	Circular	Ties	0.04			8
FUSTE_120	B500S	B500S	Circular	Ties	0.04			8
PILA_ENCEPADO	B500S	B500S	Rectangular	Ties	0.04	3	3	
PILOTE_100	B500S	B500S	Circular	Ties	0.04			8

Table: Frame Section Properties 02 - Concrete Column, Part 2 of 2

Table: Frame Section Properties 02 - Concrete Column, Part 2 of 2

SectionName	BarSizeL	BarSizeC	SpacingC	NumCBars2	NumCBars3	ReinfType
			m			
ESTRIBO_CARGADERO	#9	#4	0.15	3	3	Design
ESTRIBO_ENCEPADO	#9	#4	0.15	3	3	Design
FUSTE_100	#9	#4	0.15			Design
FUSTE_120	#9	#4	0.15			Design
PILA_ENCEPADO	#9	#4	0.15	3	3	Design
PILOTE_100	#9	#4	0.15			Design

Table: Frame Section Properties 05 - Nonprismatic, Part 1 of 2

Table: Frame Section Properties 05 - Nonprismatic, Part 1 of 2

SectionName	NumSegments	SegmentNum	StartSect	EndSect	LengthType	AbsLength
						m
TABLERO	7	1	TAB_RIOSTRA	TAB_RIOSTRA	Absolute	1.5
TABLERO	7	2	TAB_MAZ	TAB_MAZ	Absolute	0.5
TABLERO	7	3	TAB_ALIG	TAB_ALIG	Absolute	31.
TABLERO	7	4	TAB_MAZ	TAB_MAZ	Absolute	3.
TABLERO	7	5	TAB_ALIG	TAB_ALIG	Absolute	31.
TABLERO	7	6	TAB_MAZ	TAB_MAZ	Absolute	0.5
TABLERO	7	7	TAB_RIOSTRA	TAB_RIOSTRA	Absolute	1.5

Table: Frame Section Properties 05 - Nonprismatic, Part 2 of 2

Table: Frame Section Properties 05 - Nonprismatic, Part 2 of 2

SectionName	VarLength	EI33Var	EI22Var
TABLERO		Parabolic	Linear
TABLERO		Parabolic	Linear
TABLERO		Parabolic	Linear
TABLERO		Parabolic	Linear
TABLERO		Parabolic	Linear
TABLERO		Parabolic	Linear
TABLERO		Parabolic	Linear

Table: Function - Response Spectrum - From File, Part 1 of 2

Table: Function - Response Spectrum - From File, Part 1 of 2

Name	Period	Accel	FuncDamp	HeaderLines	DataType
	Sec				
espectro_e1	0.	1.	0.05	0	Period vs Accel
espectro_e1	0.03475	1.375			
espectro_e1	0.0695	1.75			
espectro_e1	0.10425	2.125			
espectro_e1	0.139	2.5			
espectro_e1	0.556	2.5			
espectro_e1	0.870889	1.59607			

Table: Function - Response Spectrum - From File, Part 1 of 2

Name	Period	Accel	FuncDamp	HeaderLines	DataType
	Sec				
espectro_e1	1.185778	1.172226			
espectro_e1	1.500667	0.926255			
espectro_e1	1.815556	0.765606			
espectro_e1	2.130444	0.652446			
espectro_e1	2.445333	0.56843			
espectro_e1	2.760222	0.503583			
espectro_e1	3.075111	0.452016			
espectro_e1	3.39	0.410029			
espectro_e1	4.056667	0.286336			
espectro_e1	4.723333	0.211211			
espectro_e1	5.39	0.162195			

Table: Function - Response Spectrum - From File, Part 2 of 2

Table: Function - Response Spectrum - From File, Part 2 of 2

Name	FileName
espectro_e1	c:\proyectos acl carlos\acl2017\17020_autovia a-334. tramo cucador\e1_proyecto\modelos sap\espectro_e1.txt
espectro_e1	
espectro_e1	
espectro_e1	
espectro_e1	
espectro_e1	
espectro_e1	
espectro_e1	
espectro_e1	
espectro_e1	
espectro_e1	
espectro_e1	
espectro_e1	
espectro_e1	
espectro_e1	
espectro_e1	
espectro_e1	
espectro_e1	
espectro_e1	
espectro_e1	

Table: Groups 1 - Definitions, Part 1 of 3

Table: Groups 1 - Definitions, Part 1 of 3

GroupName	Selection	SectionCut	Steel	Concrete	Aluminum	ColdFormed	Stage
ALL	Yes	Yes	Yes	Yes	Yes	Yes	Yes
TABLERO	Yes	Yes	Yes	Yes	Yes	Yes	Yes

Table: Groups 1 - Definitions, Part 2 of 3

Table: Groups 1 - Definitions, Part 2 of 3

GroupName	Bridge	AutoSeismic	AutoWind	SelDesSteel	SelDesAlum	SelDesCold	MassWeight
ALL	Yes	No	No	No	No	No	Yes
TABLERO	Yes	No	No	No	No	No	Yes

Table: Groups 1 - Definitions, Part 3 of 3

Table: Groups 1 - Definitions, Part 3 of 3

GroupName	Color
ALL	Red
TABLERO	Green

Table: Groups 3 - Masses and Weights

Table: Groups 3 - Masses and Weights

GroupName	SelfMass	SelfWeight	TotalMassX	TotalMassY	TotalMassZ
	KN-s2/m	KN	KN-s2/m	KN-s2/m	KN-s2/m
ALL	2142.33	21009.111	2142.33	2142.33	2142.33
TABLERO	0.	0.	0.	0.	0.

Table: Joint Constraint Assignments

Table: Joint Constraint Assignments

Joint	Constraint	Type
3	E1	Body
4	E1	Body
5	E1	Body
6	E1	Body
7	E2	Body
8	E2	Body
9	E2	Body
10	E2	Body
17	PILA	Body
18	PILA	Body
19	PILA	Body
25	ENCEPADO_P1	Body
26	ENCEPADO_P1	Body
27	ENCEPADO_P1	Body
28	ENCEPADO_P1	Body
29	ENCEPADO_P1	Body
30	ENCEPADO_P1	Body
31	ENCEPADO_P1	Body

Table: Joint Coordinates, Part 1 of 2

Table: Joint Coordinates, Part 1 of 2

Joint	CoordSys	CoordType	XorR	Y	Z	SpecialJt	GlobalX
			m	m	m		m
1	GLOBAL	Cartesian	0.	0.	0.	Yes	0.
2	GLOBAL	Cartesian	69.	0.	0.	Yes	69.
3	GLOBAL	Cartesian	0.5	0.	0.	Yes	0.5
4	GLOBAL	Cartesian	0.5	0.	-1.65	Yes	0.5
5	GLOBAL	Cartesian	0.5	2.55	-1.65	Yes	0.5
6	GLOBAL	Cartesian	0.5	-2.55	-1.65	Yes	0.5
7	GLOBAL	Cartesian	68.5	0.	0.	Yes	68.5
8	GLOBAL	Cartesian	68.5	0.	-1.65	Yes	68.5
9	GLOBAL	Cartesian	68.5	2.55	-1.65	Yes	68.5
10	GLOBAL	Cartesian	68.5	-2.55	-1.65	Yes	68.5
11	GLOBAL	Cartesian	0.5	0.	-2.05	Yes	0.5
12	GLOBAL	Cartesian	0.5	2.55	-2.05	Yes	0.5
13	GLOBAL	Cartesian	0.5	-2.55	-2.05	Yes	0.5
14	GLOBAL	Cartesian	68.5	0.	-2.05	Yes	68.5
15	GLOBAL	Cartesian	68.5	2.55	-2.05	Yes	68.5
16	GLOBAL	Cartesian	68.5	-2.55	-2.05	Yes	68.5
17	GLOBAL	Cartesian	34.5	0.	0.	Yes	34.5
18	GLOBAL	Cartesian	34.5	1.25	-1.6	Yes	34.5
19	GLOBAL	Cartesian	34.5	-1.25	-1.6	Yes	34.5
20	GLOBAL	Cartesian	34.5	1.25	-1.9	Yes	34.5
21	GLOBAL	Cartesian	34.5	-1.25	-1.9	Yes	34.5
22	GLOBAL	Cartesian	34.5	1.25	-9.4	Yes	34.5
23	GLOBAL	Cartesian	34.5	-1.25	-9.4	Yes	34.5
24	GLOBAL	Cartesian	34.5	0.	-9.4	Yes	34.5
25	GLOBAL	Cartesian	34.5	0.	-10.8	Yes	34.5
26	GLOBAL	Cartesian	36.	0.	-13.8	Yes	36.
27	GLOBAL	Cartesian	33.	0.	-13.8	Yes	33.
28	GLOBAL	Cartesian	36.	2.65	-13.8	Yes	36.
29	GLOBAL	Cartesian	33.	2.65	-13.8	Yes	33.
30	GLOBAL	Cartesian	36.	-2.65	-13.8	Yes	36.
31	GLOBAL	Cartesian	33.	-2.65	-13.8	Yes	33.
34	GLOBAL	Cartesian	0.15	0.	-2.75	Yes	0.15
35	GLOBAL	Cartesian	0.15	2.55	-2.75	Yes	0.15
36	GLOBAL	Cartesian	0.15	-2.55	-2.75	Yes	0.15
37	GLOBAL	Cartesian	0.15	5.05	-2.75	Yes	0.15
38	GLOBAL	Cartesian	0.15	-5.05	-2.75	Yes	0.15
45	GLOBAL	Cartesian	68.85	0.	-2.75	Yes	68.85
46	GLOBAL	Cartesian	68.85	2.55	-2.75	Yes	68.85
47	GLOBAL	Cartesian	68.85	-2.55	-2.75	Yes	68.85
48	GLOBAL	Cartesian	68.85	5.05	-2.75	Yes	68.85
49	GLOBAL	Cartesian	68.85	-5.05	-2.75	Yes	68.85
50	GLOBAL	Cartesian	0.35	1.4	-3.45	Yes	0.35
51	GLOBAL	Cartesian	0.15	1.4	-2.75	Yes	0.15
52	GLOBAL	Cartesian	0.35	4.2	-3.45	Yes	0.35
53	GLOBAL	Cartesian	0.15	4.2	-2.75	Yes	0.15
54	GLOBAL	Cartesian	0.35	-1.4	-3.45	Yes	0.35
55	GLOBAL	Cartesian	0.15	-1.4	-2.75	Yes	0.15
56	GLOBAL	Cartesian	0.35	-4.2	-3.45	Yes	0.35
57	GLOBAL	Cartesian	0.15	-4.2	-2.75	Yes	0.15
59	GLOBAL	Cartesian	68.85	1.4	-2.75	Yes	68.85
60	GLOBAL	Cartesian	68.65	1.4	-3.45	Yes	68.65
61	GLOBAL	Cartesian	68.85	4.2	-2.75	Yes	68.85
62	GLOBAL	Cartesian	68.65	4.2	-3.45	Yes	68.65

Table: Joint Coordinates, Part 1 of 2

Joint	CoordSys	CoordType	XorR	Y	Z	SpecialJt	GlobalX
			m	m	m		m
63	GLOBAL	Cartesian	68.85	-1.4	-2.75	Yes	68.85
64	GLOBAL	Cartesian	68.65	-1.4	-3.45	Yes	68.65
65	GLOBAL	Cartesian	68.85	-4.2	-2.75	Yes	68.85
66	GLOBAL	Cartesian	68.65	-4.2	-3.45	Yes	68.65
67	GLOBAL	Cartesian	0.35	1.4	-10.25	Yes	0.35
68	GLOBAL	Cartesian	0.35	4.2	-10.25	Yes	0.35
69	GLOBAL	Cartesian	0.35	-1.4	-10.25	Yes	0.35
70	GLOBAL	Cartesian	0.35	-4.2	-10.25	Yes	0.35
71	GLOBAL	Cartesian	68.65	1.4	-10.25	Yes	68.65
72	GLOBAL	Cartesian	68.65	4.2	-10.25	Yes	68.65
73	GLOBAL	Cartesian	68.65	-1.4	-10.25	Yes	68.65
74	GLOBAL	Cartesian	68.65	-4.2	-10.25	Yes	68.65
75	GLOBAL	Cartesian	68.65	5.3	-10.25	Yes	68.65
76	GLOBAL	Cartesian	68.65	-5.3	-10.25	Yes	68.65
77	GLOBAL	Cartesian	0.35	5.3	-10.25	Yes	0.35
79	GLOBAL	Cartesian	0.35	-5.3	-10.25	Yes	0.35
80	GLOBAL	Cartesian	2.35	1.4	-14.65	Yes	2.35
81	GLOBAL	Cartesian	2.35	4.2	-14.65	Yes	2.35
82	GLOBAL	Cartesian	2.35	-1.4	-14.65	Yes	2.35
83	GLOBAL	Cartesian	2.35	-4.2	-14.65	Yes	2.35
84	GLOBAL	Cartesian	70.65	1.4	-14.65	Yes	70.65
85	GLOBAL	Cartesian	70.65	4.2	-14.65	Yes	70.65
86	GLOBAL	Cartesian	70.65	-1.4	-14.65	Yes	70.65
87	GLOBAL	Cartesian	70.65	-4.2	-14.65	Yes	70.65
88	GLOBAL	Cartesian	-1.65	1.4	-14.65	Yes	-1.65
89	GLOBAL	Cartesian	-1.65	4.2	-14.65	Yes	-1.65
90	GLOBAL	Cartesian	-1.65	-1.4	-14.65	Yes	-1.65
91	GLOBAL	Cartesian	-1.65	-4.2	-14.65	Yes	-1.65
92	GLOBAL	Cartesian	66.65	1.4	-14.65	Yes	66.65
93	GLOBAL	Cartesian	66.65	4.2	-14.65	Yes	66.65
94	GLOBAL	Cartesian	66.65	-1.4	-14.65	Yes	66.65
95	GLOBAL	Cartesian	66.65	-4.2	-14.65	Yes	66.65

Table: Joint Coordinates, Part 2 of 2

Table: Joint Coordinates, Part 2 of 2

Joint	GlobalY	GlobalZ	GUID
	m	m	
1	0.	0.	43243175-8b84-46d8-a824-9d5e6e82244f
2	0.	0.	43243175-8b84-46d8-a824-9d5e6e82244f
3	0.	0.	43243175-8b84-46d8-a824-9d5e6e82244f
4	0.	-1.65	43243175-8b84-46d8-a824-9d5e6e82244f
5	2.55	-1.65	43243175-8b84-46d8-a824-9d5e6e82244f
6	-2.55	-1.65	43243175-8b84-46d8-a824-9d5e6e82244f
7	0.	0.	43243175-8b84-46d8-a824-9d5e6e82244f
8	0.	-1.65	43243175-8b84-46d8-a824-9d5e6e82244f

Table: Joint Coordinates, Part 2 of 2

Joint	GlobalY	GlobalZ	GUID
	m	m	
9	2.55	-1.65	43243175-8b84-46d8-a8 24-9d5e6e82244f
10	-2.55	-1.65	43243175-8b84-46d8-a8 24-9d5e6e82244f
11	0.	-2.05	43243175-8b84-46d8-a8 24-9d5e6e82244f
12	2.55	-2.05	43243175-8b84-46d8-a8 24-9d5e6e82244f
13	-2.55	-2.05	43243175-8b84-46d8-a8 24-9d5e6e82244f
14	0.	-2.05	43243175-8b84-46d8-a8 24-9d5e6e82244f
15	2.55	-2.05	43243175-8b84-46d8-a8 24-9d5e6e82244f
16	-2.55	-2.05	43243175-8b84-46d8-a8 24-9d5e6e82244f
17	0.	0.	43243175-8b84-46d8-a8 24-9d5e6e82244f
18	1.25	-1.6	43243175-8b84-46d8-a8 24-9d5e6e82244f
19	-1.25	-1.6	43243175-8b84-46d8-a8 24-9d5e6e82244f
20	1.25	-1.9	43243175-8b84-46d8-a8 24-9d5e6e82244f
21	-1.25	-1.9	43243175-8b84-46d8-a8 24-9d5e6e82244f
22	1.25	-9.4	43243175-8b84-46d8-a8 24-9d5e6e82244f
23	-1.25	-9.4	43243175-8b84-46d8-a8 24-9d5e6e82244f
24	0.	-9.4	ecca9980-db59-47b3-a9f 2-3efb7cb712c0
25	0.	-10.8	ecca9980-db59-47b3-a9f 2-3efb7cb712c0
26	0.	-13.8	ecca9980-db59-47b3-a9f 2-3efb7cb712c0
27	0.	-13.8	ecca9980-db59-47b3-a9f 2-3efb7cb712c0
28	2.65	-13.8	ecca9980-db59-47b3-a9f 2-3efb7cb712c0
29	2.65	-13.8	ecca9980-db59-47b3-a9f 2-3efb7cb712c0
30	-2.65	-13.8	ecca9980-db59-47b3-a9f 2-3efb7cb712c0
31	-2.65	-13.8	ecca9980-db59-47b3-a9f 2-3efb7cb712c0
34	0.	-2.75	ecca9980-db59-47b3-a9f 2-3efb7cb712c0
35	2.55	-2.75	ecca9980-db59-47b3-a9f 2-3efb7cb712c0
36	-2.55	-2.75	ecca9980-db59-47b3-a9f 2-3efb7cb712c0
37	5.05	-2.75	ecca9980-db59-47b3-a9f 2-3efb7cb712c0
38	-5.05	-2.75	ecca9980-db59-47b3-a9f 2-3efb7cb712c0
45	0.	-2.75	ecca9980-db59-47b3-a9f 2-3efb7cb712c0
46	2.55	-2.75	ecca9980-db59-47b3-a9f 2-3efb7cb712c0

Table: Joint Coordinates, Part 2 of 2

Joint	GlobalY	GlobalZ	GUID
	m	m	
47	-2.55	-2.75	ecca9980-db59-47b3-a9f 2-3efb7cb712c0
48	5.05	-2.75	ecca9980-db59-47b3-a9f 2-3efb7cb712c0
49	-5.05	-2.75	ecca9980-db59-47b3-a9f 2-3efb7cb712c0
50	1.4	-3.45	ecca9980-db59-47b3-a9f 2-3efb7cb712c0
51	1.4	-2.75	ecca9980-db59-47b3-a9f 2-3efb7cb712c0
52	4.2	-3.45	ecca9980-db59-47b3-a9f 2-3efb7cb712c0
53	4.2	-2.75	ecca9980-db59-47b3-a9f 2-3efb7cb712c0
54	-1.4	-3.45	ecca9980-db59-47b3-a9f 2-3efb7cb712c0
55	-1.4	-2.75	ecca9980-db59-47b3-a9f 2-3efb7cb712c0
56	-4.2	-3.45	ecca9980-db59-47b3-a9f 2-3efb7cb712c0
57	-4.2	-2.75	ecca9980-db59-47b3-a9f 2-3efb7cb712c0
59	1.4	-2.75	ecca9980-db59-47b3-a9f 2-3efb7cb712c0
60	1.4	-3.45	ecca9980-db59-47b3-a9f 2-3efb7cb712c0
61	4.2	-2.75	ecca9980-db59-47b3-a9f 2-3efb7cb712c0
62	4.2	-3.45	ecca9980-db59-47b3-a9f 2-3efb7cb712c0
63	-1.4	-2.75	ecca9980-db59-47b3-a9f 2-3efb7cb712c0
64	-1.4	-3.45	ecca9980-db59-47b3-a9f 2-3efb7cb712c0
65	-4.2	-2.75	ecca9980-db59-47b3-a9f 2-3efb7cb712c0
66	-4.2	-3.45	ecca9980-db59-47b3-a9f 2-3efb7cb712c0
67	1.4	-10.25	ecca9980-db59-47b3-a9f 2-3efb7cb712c0
68	4.2	-10.25	ecca9980-db59-47b3-a9f 2-3efb7cb712c0
69	-1.4	-10.25	ecca9980-db59-47b3-a9f 2-3efb7cb712c0
70	-4.2	-10.25	ecca9980-db59-47b3-a9f 2-3efb7cb712c0
71	1.4	-10.25	ecca9980-db59-47b3-a9f 2-3efb7cb712c0
72	4.2	-10.25	ecca9980-db59-47b3-a9f 2-3efb7cb712c0
73	-1.4	-10.25	ecca9980-db59-47b3-a9f 2-3efb7cb712c0
74	-4.2	-10.25	ecca9980-db59-47b3-a9f 2-3efb7cb712c0
75	5.3	-10.25	ecca9980-db59-47b3-a9f 2-3efb7cb712c0
76	-5.3	-10.25	ecca9980-db59-47b3-a9f 2-3efb7cb712c0
77	5.3	-10.25	ecca9980-db59-47b3-a9f 2-3efb7cb712c0

Table: Joint Coordinates, Part 2 of 2

Joint	GlobalY	GlobalZ	GUID
	m	m	
79	-5.3	-10.25	ecca9980-db59-47b3-a9f2-3efb7cb712c0
80	1.4	-14.65	ecca9980-db59-47b3-a9f2-3efb7cb712c0
81	4.2	-14.65	ecca9980-db59-47b3-a9f2-3efb7cb712c0
82	-1.4	-14.65	ecca9980-db59-47b3-a9f2-3efb7cb712c0
83	-4.2	-14.65	ecca9980-db59-47b3-a9f2-3efb7cb712c0
84	1.4	-14.65	ecca9980-db59-47b3-a9f2-3efb7cb712c0
85	4.2	-14.65	ecca9980-db59-47b3-a9f2-3efb7cb712c0
86	-1.4	-14.65	ecca9980-db59-47b3-a9f2-3efb7cb712c0
87	-4.2	-14.65	ecca9980-db59-47b3-a9f2-3efb7cb712c0
88	1.4	-14.65	ecca9980-db59-47b3-a9f2-3efb7cb712c0
89	4.2	-14.65	ecca9980-db59-47b3-a9f2-3efb7cb712c0
90	-1.4	-14.65	ecca9980-db59-47b3-a9f2-3efb7cb712c0
91	-4.2	-14.65	ecca9980-db59-47b3-a9f2-3efb7cb712c0
92	1.4	-14.65	ecca9980-db59-47b3-a9f2-3efb7cb712c0
93	4.2	-14.65	ecca9980-db59-47b3-a9f2-3efb7cb712c0
94	-1.4	-14.65	ecca9980-db59-47b3-a9f2-3efb7cb712c0
95	-4.2	-14.65	ecca9980-db59-47b3-a9f2-3efb7cb712c0

Table: Joint Loads - Force, Part 1 of 2

Table: Joint Loads - Force, Part 1 of 2

Joint	LoadPat	CoordSys	F1	F2	F3	M1	M2
			KN	KN	KN	KN-m	KN-m
24	PTIERR_CIM	GLOBAL	0.	0.	-1029.922	0.	0.
37	DEAD	GLOBAL	0.	0.	-55.9	0.	0.
38	DEAD	GLOBAL	0.	0.	-55.9	0.	0.
48	DEAD	GLOBAL	0.	0.	-55.9	0.	0.
49	DEAD	GLOBAL	0.	0.	-55.9	0.	0.

Table: Joint Loads - Force, Part 2 of 2

Table: Joint Loads - Force, Part 2 of 2

Joint	LoadPat	M3	GUID
		KN-m	
24	PTIERR_CIM	0.	e9c66ba7-f58b-4945-bd25-5d8c5ea68fc6
37	DEAD	0.	4deac133-1701-475c-9849-1c2302ed0b11

Table: Joint Loads - Force, Part 2 of 2

Joint	LoadPat	M3	GUID
		KN-m	
38	DEAD	0.	dd263ee6-47bb-429e-bc93-9cf8bdb14c1c
48	DEAD	0.	7ba5c2bb-c8bc-45de-b880-0e34989ccffc
49	DEAD	0.	1c08b938-b76e-4951-a685-a6c6157a60ee

Table: Joint Spring Assignments 1 - Uncoupled

Table: Joint Spring Assignments 1 - Uncoupled

Joint	CoordSys	U1	U2	U3	R1	R2	R3
		KN/m	KN/m	KN/m	KN-m/rad	KN-m/rad	KN-m/rad
26	Local	46100.	46100.	10000000.	0.	0.	0.
27	Local	46100.	46100.	10000000.	0.	0.	0.
28	Local	46100.	46100.	10000000.	0.	0.	0.
29	Local	46100.	46100.	10000000.	0.	0.	0.
30	Local	46100.	46100.	10000000.	0.	0.	0.
31	Local	46100.	46100.	10000000.	0.	0.	0.
80	Local	46100.	46100.	10000000.	0.	0.	0.
81	Local	46100.	46100.	10000000.	0.	0.	0.
82	Local	46100.	46100.	10000000.	0.	0.	0.
83	Local	46100.	46100.	10000000.	0.	0.	0.
84	Local	46100.	46100.	10000000.	0.	0.	0.
85	Local	46100.	46100.	10000000.	0.	0.	0.
86	Local	46100.	46100.	10000000.	0.	0.	0.
87	Local	46100.	46100.	10000000.	0.	0.	0.
88	Local	46100.	46100.	10000000.	0.	0.	0.
89	Local	46100.	46100.	10000000.	0.	0.	0.
90	Local	46100.	46100.	10000000.	0.	0.	0.
91	Local	46100.	46100.	10000000.	0.	0.	0.
92	Local	46100.	46100.	10000000.	0.	0.	0.
93	Local	46100.	46100.	10000000.	0.	0.	0.
94	Local	46100.	46100.	10000000.	0.	0.	0.
95	Local	46100.	46100.	10000000.	0.	0.	0.

Table: Lane Centerline Points

Table: Lane Centerline Points

Lane	Point	CoordSys	X	Y	Z	GlobalX	GlobalY	GlobalZ
			m	m	m	m	m	m
CARRIL_1	1	GLOBAL	0.001	-2.5	0.	0.001	-2.5	0.
CARRIL_1	2	GLOBAL	68.999	-2.5	0.	68.999	-2.5	0.
CARRIL_2	1	GLOBAL	0.001	0.5	0.	0.001	0.5	0.
CARRIL_2	2	GLOBAL	68.999	0.5	0.	68.999	0.5	0.
CARRIL_REM	1	GLOBAL	0.001	3.	0.	0.001	3.	0.
CARRIL_REM	2	GLOBAL	68.999	3.	0.	68.999	3.	0.

Table: Lane Definition Data, Part 1 of 2

Table: Lane Definition Data, Part 1 of 2

Lane	LaneFrom	Frame	Width	Offset	LoadGroup	DiscAlong	DiscAcross	DiscSpan
			m	m		m	m	
CARRIL_1	Frame	1	0.	2.5	Default	1.	3.048	No
CARRIL_2	Frame	1	0.	-0.5	Default	1.	3.048	No
CARRIL_REM	Frame	1	0.	-3.	Default	1.	3.048	No

Table: Lane Definition Data, Part 2 of 2

Table: Lane Definition Data, Part 2 of 2

Lane	DiscLane	DiscLaneFac	LeftType	RightType	Color	Notes
CARRIL_1	Yes	10.	Interior	Interior	Green	
CARRIL_2	Yes	10.	Interior	Interior	Cyan	
CARRIL_REM	Yes	10.	Interior	Interior	Red	

Table: Link Property Assignments

Table: Link Property Assignments

Link	LinkType	LinkJoints	LinkProp	LinkFDProp	PropMod
1	Linear	TwoJoint	AP_ESTRIBO	None	1.
2	Linear	TwoJoint	AP_ESTRIBO	None	1.
3	Linear	TwoJoint	AP_ESTRIBO	None	1.
4	Linear	TwoJoint	AP_ESTRIBO	None	1.
5	Linear	TwoJoint	AP_ESTRIBO	None	1.
6	Linear	TwoJoint	AP_ESTRIBO	None	1.
7	Linear	TwoJoint	AP_PILA	None	1.
8	Linear	TwoJoint	AP_PILA	None	1.
9	Linear	TwoJoint	INFRIG	None	1.
10	Linear	TwoJoint	INFRIG	None	1.
11	Linear	TwoJoint	INFRIG	None	1.
12	Linear	TwoJoint	INFRIG	None	1.
13	Linear	TwoJoint	INFRIG	None	1.
15	Linear	TwoJoint	INFRIG	None	1.
16	Linear	TwoJoint	INFRIG	None	1.
17	Linear	TwoJoint	INFRIG	None	1.
18	Linear	TwoJoint	INFRIG	None	1.
19	Linear	TwoJoint	INFRIG	None	1.
20	Linear	TwoJoint	INFRIG	None	1.
21	Linear	TwoJoint	INFRIG	None	1.
22	Linear	TwoJoint	INFRIG	None	1.
23	Linear	TwoJoint	INFRIG	None	1.
24	Linear	TwoJoint	INFRIG	None	1.
25	Linear	TwoJoint	INFRIG	None	1.
26	Linear	TwoJoint	INFRIG	None	1.
27	Linear	TwoJoint	INFRIG	None	1.
28	Linear	TwoJoint	INFRIG	None	1.
29	Linear	TwoJoint	INFRIG	None	1.
30	Linear	TwoJoint	INFRIG	None	1.
31	Linear	TwoJoint	INFRIG	None	1.

Table: Link Property Assignments

Link	LinkType	LinkJoints	LinkProp	LinkFDProp	PropMod
32	Linear	TwoJoint	INFRIG	None	1.
33	Linear	TwoJoint	INFRIG	None	1.
34	Linear	TwoJoint	INFRIG	None	1.
35	Linear	TwoJoint	INFRIG	None	1.
36	Linear	TwoJoint	INFRIG	None	1.
37	Linear	TwoJoint	INFRIG	None	1.
38	Linear	TwoJoint	INFRIG	None	1.
39	Linear	TwoJoint	INFRIG	None	1.
40	Linear	TwoJoint	INFRIG	None	1.
41	Linear	TwoJoint	INFRIG	None	1.

Table: Link Property Definitions 01 - General, Part 1 of 3

Table: Link Property Definitions 01 - General, Part 1 of 3

Link	LinkType	Mass	Weight	RotInert1	RotInert2	RotInert3	DefLength
		KN-s2/m	KN	KN-m-s2	KN-m-s2	KN-m-s2	m
AP_ESTRIBO	Linear	0.	0.	0.	0.	0.	1.
AP_PILA	Linear	0.	0.	0.	0.	0.	1.
INFRIG	Linear	0.	0.	0.	0.	0.	1.

Table: Link Property Definitions 01 - General, Part 2 of 3

Table: Link Property Definitions 01 - General, Part 2 of 3

Link	DefArea	PDM2I	PDM2J	PDM3I	PDM3J	Color
	m2					
AP_ESTRIBO	1.	0.	0.	0.	0.	Red
AP_PILA	1.	0.	0.	0.	0.	Red
INFRIG	1.	0.	0.	0.	0.	Red

Table: Link Property Definitions 01 - General, Part 3 of 3

Table: Link Property Definitions 01 - General, Part 3 of 3

Link	GUID	Notes
AP_ESTRIBO		Added 02/06/2017 13:42:27
AP_PILA		Added 02/06/2017 13:42:27
INFRIG		Added 05/06/2017 8:34:41

Table: Link Property Definitions 02 - Linear

Table: Link Property Definitions 02 - Linear

Link	DOF	Fixed	TransKE	TransCE	DJ
			KN/m	KN-s/m	m
AP_ESTRIBO	U1	No	1.000E+10	0.	
AP_ESTRIBO	U2	No	5250.	0.	0.
AP_ESTRIBO	U3	No	5250.	0.	0.
AP_PILA	U1	No	1.000E+10	0.	
AP_PILA	U2	No	4712.4	0.	0.
AP_PILA	U3	No	4712.4	0.	0.
INFRIG	U1	Yes			
INFRIG	U2	Yes			

Table: Link Property Definitions 02 - Linear

Link	DOF	Fixed	TransKE	TransCE	DJ
			KN/m	KN-s/m	m
INFRIG	U3	Yes			
INFRIG	R1	Yes			
INFRIG	R2	Yes			
INFRIG	R3	Yes			

Table: Load Case Definitions, Part 1 of 3

Table: Load Case Definitions, Part 1 of 3

Case	Type	InitialCond	ModalCase	BaseCase	MassSource	DesTypeOpt	DesignType
DEAD	LinStatic	Zero				Prog Det	Dead
MODAL	LinModal	Zero				Prog Det	Other
TESADO	LinStatic	Zero				Prog Det	Prestress
PAVIMENTO	LinStatic	Zero				Prog Det	Dead
BARRERAS	LinStatic	Zero				Prog Det	Dead
SC_CARRIL_1	LinMoving	Zero				Prog Det	Vehicle Live
VP_CARRIL_1	LinMoving	Zero				Prog Det	Vehicle Live
SC_CARRIL_2	LinMoving	Zero				Prog Det	Vehicle Live
VP_CARRIL_2	LinMoving	Zero				Prog Det	Vehicle Live
SC_CARRIL_REM	LinMoving	Zero				Prog Det	Vehicle Live
VP_C1	LinMSStat	Zero				Prog Det	Vehicle Live
VP_C2	LinMSStat	Zero				Prog Det	Vehicle Live
RETRYFLU	LinStatic	Zero				Prog Det	Dead
GRAD_TERM_1	LinStatic	Zero				Prog Det	Dead
TEMP_UNIF	LinStatic	Zero				Prog Det	Dead
GRAD_TERM_2	LinStatic	Zero				Prog Det	Dead
FRENADO_1	LinStatic	Zero				Prog Det	Dead
FRENADO_2	LinStatic	Zero				Prog Det	Dead
PTIERR_CIM	LinStatic	Zero				Prog Det	Dead
E_TIERRAS	LinStatic	Zero				Prog Det	Dead
E_SC	LinStatic	Zero				Prog Det	Dead
SC_UNIF	LinStatic	Zero				Prog Det	Dead
SISMO_X	LinRespSpec		MODAL			Prog Det	Quake
SISMO_Y	LinRespSpec		MODAL			Prog Det	Quake
SISMO_Z	LinRespSpec		MODAL			Prog Det	Quake
VIENTO	LinStatic	Zero				Prog Det	Dead
SC_UNIF_V1	LinStatic	Zero				Prog Det	Dead
SC_UNIF_V2	LinStatic	Zero				Prog Det	Dead

Table: Load Case Definitions, Part 2 of 3

Table: Load Case Definitions, Part 2 of 3

Case	DesActOpt	DesignAct	AutoType	RunCase	CaseStatus	GUID
DEAD	Prog Det	Non-Composite	None	Yes	Finished	
MODAL	Prog Det	Other	None	Yes	Finished	
TESADO	Prog Det	Long-Term Composite	None	Yes	Finished	
PAVIMENTO	Prog Det	Non-Composite	None	Yes	Finished	
BARRERAS	Prog Det	Non-Composite	None	Yes	Finished	
SC_CARRIL_1	Prog Det	Short-Term Composite	None	Yes	Finished	
VP_CARRIL_1	Prog Det	Short-Term Composite	None	Yes	Finished	
SC_CARRIL_2	Prog Det	Short-Term Composite	None	Yes	Finished	
VP_CARRIL_2	Prog Det	Short-Term Composite	None	Yes	Finished	
SC_CARRIL_REM	Prog Det	Short-Term Composite	None	Yes	Finished	
VP_C1	Prog Det	Short-Term Composite	None	Yes	Finished	
VP_C2	Prog Det	Short-Term Composite	None	Yes	Finished	
RETRYFLU	Prog Det	Non-Composite	None	Yes	Finished	
GRAD_TERM_1	Prog Det	Non-Composite	None	Yes	Finished	
TEMP_UNIF	Prog Det	Non-Composite	None	Yes	Finished	
GRAD_TERM_2	Prog Det	Non-Composite	None	Yes	Finished	
FRENADO_1	Prog Det	Non-Composite	None	Yes	Finished	
FRENADO_2	Prog Det	Non-Composite	None	Yes	Finished	
PTIERR_CIM	Prog Det	Non-Composite	None	Yes	Finished	
E_TIERRAS	Prog Det	Non-Composite	None	Yes	Finished	
E_SC	Prog Det	Non-Composite	None	Yes	Finished	
SC_UNIF	Prog Det	Non-Composite	None	Yes	Finished	
SISMO_X	Prog Det	Short-Term Composite	None	Yes	Finished	
SISMO_Y	Prog Det	Short-Term Composite	None	Yes	Finished	
SISMO_Z	Prog Det	Short-Term Composite	None	Yes	Finished	
VIENTO	Prog Det	Non-Composite	None	Yes	Finished	
SC_UNIF_V1	Prog Det	Non-Composite	None	Yes	Finished	
SC_UNIF_V2	Prog Det	Non-Composite	None	Yes	Finished	

Table: Load Case Definitions, Part 3 of 3

Table: Load Case Definitions, Part 3 of 3

Case	Notes
DEAD	
MODAL	
TESADO	
PAVIMENTO	
BARRERAS	
SC_CARRIL_1	
VP_CARRIL_1	
SC_CARRIL_2	
VP_CARRIL_2	
SC_CARRIL_REM	
VP_C1	
VP_C2	
RETRYFLU	
GRAD_TERM_1	
TEMP_UNIF	
GRAD_TERM_2	
FRENADO_1	
FRENADO_2	
PTIERR_CIM	
E_TIERRAS	
E_SC	
SC_UNIF	
SISMO_X	
SISMO_Y	
SISMO_Z	
VIENTO	
SC_UNIF_V1	
SC_UNIF_V2	

Table: Load Pattern Definitions

Table: Load Pattern Definitions

LoadPat	DesignType	SelfWtMult	AutoLoad	GUID	Notes
DEAD	Dead	1.		fa0a2f86-bc83-4e2f-9328-aef46d10803e	
TESADO	Prestress	0.		a65e1db7-e2af-463b-81d3-628af134fb22	
PAVIMENTO	Dead	0.		380e6413-b6df-413a-a9f2-39fdb61bffc3	
BARRERAS	Dead	0.		5978c895-161f-4dd8-a53c-c5aa52df8d8c	

Table: Load Pattern Definitions

LoadPat	DesignType	SelfWtMult	AutoLoad	GUID	Notes
PTIERR_CIM	Dead	0.		73a4acdf-7897-456a-900a-2bbec958dc85	
RETRYFLU	Dead	0.		e95b7195-040c-4ee1-83c8-e1fa9bee2ff4	
SC_UNIF	Dead	0.		4c230a7d-e926-44e6-a57e-2d522aafc8cd	
VIENTO	Dead	0.		37c1502f-306b-43b2-bf22-9f2b1d9f285b	
GRAD_TERM_1	Dead	0.		0b502998-0323-4a94-b121-b5c585a0572a	
GRAD_TERM_2	Dead	0.		6ba26a53-c473-4667-8213-af13134e98ed	
TEMP_UNIF	Dead	0.		1728d877-03c3-4520-a982-2c4b452dbdf2	
FRENADO_1	Dead	0.		d61ca1b5-9cd6-4780-b175-9a6466661434	
FRENADO_2	Dead	0.		e3cb762c-d494-4acc-a2c3-d7512940675f	
E_TIERRAS	Dead	0.		e0e88e08-a55d-4c12-9c3b-2622106c5064	
E_SC	Dead	0.		06508d49-c3c6-4219-8c7d-fe6ceb1ac171	
VP_C1	Vehicle Live	0.		c2b94c74-1ada-4625-ab48-883569a95199	
VP_C2	Vehicle Live	0.		d811b199-86b4-489f-aa63-259b7a701038	
SC_UNIF_V1	Dead	0.		dd500814-0b43-48c1-99c3-5dda70535240	
SC_UNIF_V2	Dead	0.		5a72e607-a2d4-42f6-acab-b69d2fce0285	

Table: Mass Source

Table: Mass Source

MassSource	Elements	Masses	Loads	IsDefault	LoadPat	Multiplier
MASA_SISMO	No	No	Yes	Yes	DEAD	1.
MASA_SISMO					PAVIMENTO	1.
MASA_SISMO					BARRERAS	1.
MASA_SISMO					SC_UNIF	0.2

Table: Material Properties 01 - General, Part 1 of 2

Table: Material Properties 01 - General, Part 1 of 2

Material	Type	SymType	TempDependd	Color	GUID
4000Psi	Concrete	Isotropic	No	Red	
A992Fy50	Steel	Isotropic	No	Cyan	
B500S	Rebar	Uniaxial	No	Green	
HA-30	Concrete	Isotropic	No	Red	
HP-40	Concrete	Isotropic	No	Red	

Table: Material Properties 01 - General, Part 1 of 2

Material	Type	SymType	TempDependd	Color	GUID
Y1860S7	Tendon	Uniaxial	No	Green	

Table: Material Properties 01 - General, Part 2 of 2

Table: Material Properties 01 - General, Part 2 of 2

Material	Notes
4000Psi	Customary f'c 4000 psi 02/06/2017 11:45:35
A992Fy50	ASTM A992 Grade 50 02/06/2017 11:45:35
B500S	Rebar added 02/06/2017 11:53:08
HA-30	Customary f'c 4000 psi 02/06/2017 11:45:35
HP-40	Customary f'c 4000 psi 02/06/2017 11:45:35
Y1860S7	Tendon added 02/06/2017 11:53:37

Table: Material Properties 02 - Basic Mechanical Properties

Table: Material Properties 02 - Basic Mechanical Properties

Material	UnitWeight	UnitMass	E1	G12	U12	A1
	KN/m3	KN-s2/m4	KN/m2	KN/m2		1/C
4000Psi	2.3563E+01	2.4028E+00	24855578.06	10356490.86	0.2	9.9000E-06
A992Fy50	7.6973E+01	7.8490E+00	199947978.8	76903068.77	0.3	1.1700E-05
B500S	7.6973E+01	7.8490E+00	199947978.8			1.1700E-05
HA-30	2.5000E+01	2.5493E+00	28576790.96	11906996.23	0.2	1.0000E-05
HP-40	2.5000E+01	2.5493E+00	30891050.08	12871270.87	0.2	1.0000E-05
Y1860S7	7.6973E+01	7.8490E+00	190000000.			1.1700E-05

Table: Material Properties 03b - Concrete Data, Part 1 of 2

Table: Material Properties 03b - Concrete Data, Part 1 of 2

Material	Fc	eFc	LtWtConc	SSCurveOpt	SSHysType	SFc	SCap	FinalSlope
	KN/m2	KN/m2						
4000Psi	27579.03	27579.03	No	Mander	Takeda	0.002219	0.005	-0.1
HA-30	30000.	30000.	No	Mander	Takeda	0.002219	0.005	-0.1
HP-40	35000.	35000.	No	Mander	Takeda	0.002219	0.005	-0.1

Table: Material Properties 03b - Concrete Data, Part 2 of 2

Table: Material Properties 03b - Concrete Data, Part 2 of 2

Material	FAngle	DAngle
	Degrees	Degrees
4000Psi	0.	0.
HA-30	0.	0.
HP-40	0.	0.

Table: Material Properties 03f - Tendon Data

Table: Material Properties 03f - Tendon Data

Material	Fy	Fu	SSCurveOpt	SSHysType	FinalSlope
	KN/m2	KN/m2			
Y1860S7	1689905.16	1861584.63	270 ksi	Kinematic	-0.1

Table: Multi-Step Moving Load 1 - General

Table: Multi-Step Moving Load 1 - General

LoadPat	LoadDur	LoadDisc
	Sec	Sec
VP_C1	72.	1.
VP_C2	72.	1.

Table: Multi-Step Moving Load 2 - Vehicle Data

Table: Multi-Step Moving Load 2 - Vehicle Data

LoadPat	Vehicle	Lane	Station	StartTime	Direction	Speed
			m	Sec		m/sec
VP_C1	VP_CARRIL_1	CARRIL_1	0.	0.	Forward	1.
VP_C2	VP_CARRIL_2	CARRIL_2	0.	0.	Forward	1.

Table: Overwrites - Concrete Design - ACI 318-14, Part 1 of 2

Table: Overwrites - Concrete Design - ACI 318-14, Part 1 of 2

Frame	DesignSect	FrameType	RLLF	XLMajor	XLMinor	XKMajor
3	Program Determined	Program Determined	0.	0.	0.	0.
4	Program Determined	Program Determined	0.	0.	0.	0.
5	Program Determined	Program Determined	0.	0.	0.	0.
6	Program Determined	Program Determined	0.	0.	0.	0.
7	Program Determined	Program Determined	0.	0.	0.	0.
8	Program Determined	Program Determined	0.	0.	0.	0.
9	Program Determined	Program Determined	0.	0.	0.	0.
10	Program Determined	Program Determined	0.	0.	0.	0.
11	Program Determined	Program Determined	0.	0.	0.	0.
12	Program Determined	Program Determined	0.	0.	0.	0.
13	Program Determined	Program Determined	0.	0.	0.	0.
14	Program Determined	Program Determined	0.	0.	0.	0.
15	Program Determined	Program Determined	0.	0.	0.	0.
16	Program Determined	Program Determined	0.	0.	0.	0.
17	Program Determined	Program Determined	0.	0.	0.	0.

Table: Overwrites - Concrete Design - ACI 318-14, Part 2 of 2

Table: Overwrites - Concrete Design - ACI 318-14, Part 2 of 2

Frame	XKMinor	CmMajor	CmMinor	DnsMajor	DnsMinor	DsMajor	DsMinor
3	0.	0.	0.	0.	0.	0.	0.
4	0.	0.	0.	0.	0.	0.	0.
5	0.	0.	0.	0.	0.	0.	0.

Table: Overwrites - Concrete Design - ACI 318-14, Part 2 of 2

Frame	XKMinor	CmMajor	CmMinor	DnsMajor	DnsMinor	DsMajor	DsMinor
6	0.	0.	0.	0.	0.	0.	0.
7	0.	0.	0.	0.	0.	0.	0.
8	0.	0.	0.	0.	0.	0.	0.
9	0.	0.	0.	0.	0.	0.	0.
10	0.	0.	0.	0.	0.	0.	0.
11	0.	0.	0.	0.	0.	0.	0.
12	0.	0.	0.	0.	0.	0.	0.
13	0.	0.	0.	0.	0.	0.	0.
14	0.	0.	0.	0.	0.	0.	0.
15	0.	0.	0.	0.	0.	0.	0.
16	0.	0.	0.	0.	0.	0.	0.
17	0.	0.	0.	0.	0.	0.	0.

Table: Section Designer Properties 01 - General, Part 1 of 5

Table: Section Designer Properties 01 - General, Part 1 of 5

SectionName	DesignType	DsgnOrChck	BaseMat	IncludeVStr	nTotalShp	nIWideFlng
TAB_ALIG	No Check/Design	Check	HP-40	No	6	0
TAB_MAZ	No Check/Design	Check	HP-40	No	3	0
TAB_RIOSTRA	No Check/Design	Check	HP-40	No	3	0

Table: Section Designer Properties 01 - General, Part 2 of 5

Table: Section Designer Properties 01 - General, Part 2 of 5

SectionName	nChannel	nTee	nAngle	nDblAngle	nBoxTube	nPipe	nPlate
TAB_ALIG	0	0	0	0	0	0	0
TAB_MAZ	0	0	0	0	0	0	0
TAB_RIOSTRA	0	0	0	0	0	0	0

Table: Section Designer Properties 01 - General, Part 3 of 5

Table: Section Designer Properties 01 - General, Part 3 of 5

SectionName	nSolidRect	nSolidCirc	nSolidSeg	nSolidSect	nPolygon	nReinfSing	nReinfLine
TAB_ALIG	0	3	0	0	1	0	0
TAB_MAZ	0	0	0	0	1	0	0
TAB_RIOSTRA	0	0	0	0	1	0	0

Table: Section Designer Properties 01 - General, Part 4 of 5

Table: Section Designer Properties 01 - General, Part 4 of 5

SectionName	nReinfRect	nReinfCirc	nRefLine	nRefCirc	nCaltransSq	nCaltransCr	nCaltransHx
TAB_ALIG	0	0	0	0	0	0	0
TAB_MAZ	0	0	0	0	0	0	0
TAB_RIOSTRA	0	0	0	0	0	0	0

Table: Section Designer Properties 01 - General, Part 5 of 5

Table: Section Designer Properties 01 - General, Part 5 of 5

SectionName	nCaltransOc
TAB_ALIG	0
TAB_MAZ	0
TAB_RIOSTRA	0

Table: Section Designer Properties 13 - Shape Solid Circle, Part 1 of 3

Table: Section Designer Properties 13 - Shape Solid Circle, Part 1 of 3

SectionName	ShapeName	ShapeMat	ZOrder	FillColor	XCenter	YCenter	Diameter
					m	m	m
TAB_ALIG	Circle1	Opening	2	White	-1.27	-0.825	1.
TAB_ALIG	Circle2	Opening	4	White	0.	-0.825	1.
TAB_ALIG	Circle3	Opening	3	White	1.27	-0.825	1.

Table: Section Designer Properties 13 - Shape Solid Circle, Part 2 of 3

Table: Section Designer Properties 13 - Shape Solid Circle, Part 2 of 3

SectionName	ShapeName	Reinforcing	RebarMat	BarMatType	NumBars	Rotation	Cover
						Degrees	m
TAB_ALIG	Circle1	No					
TAB_ALIG	Circle2	No					
TAB_ALIG	Circle3	No					

Table: Section Designer Properties 13 - Shape Solid Circle, Part 3 of 3

Table: Section Designer Properties 13 - Shape Solid Circle, Part 3 of 3

SectionName	ShapeName	BarSize	TendonForce	BarArea	ConcCover	ManderPlace
			KN	m2		
TAB_ALIG	Circle1					
TAB_ALIG	Circle2					
TAB_ALIG	Circle3					

Table: Section Designer Properties 16 - Shape Polygon, Part 1 of 2

Table: Section Designer Properties 16 - Shape Polygon, Part 1 of 2

SectionName	ShapeName	X	Y	Radius	ShapeMat	ZOrder	FillColor
		m	m	m			
TAB_ALIG	Polygon1	0.	0.	0.	HP-40	1	Red
TAB_ALIG	Polygon1	4.65	-0.093	0.			
TAB_ALIG	Polygon1	4.65	-0.293	0.			
TAB_ALIG	Polygon1	2.65	-0.433	0.			
TAB_ALIG	Polygon1	1.95	-1.65	0.			
TAB_ALIG	Polygon1	-1.95	-1.65	0.			
TAB_ALIG	Polygon1	-2.65	-0.433	0.			
TAB_ALIG	Polygon1	-4.65	-0.293	0.			
TAB_ALIG	Polygon1	-4.65	-0.093	0.			
TAB_MAZ	Polygon1	0.	0.	0.	HP-40	1	Red
TAB_MAZ	Polygon1	4.65	-0.093	0.			
TAB_MAZ	Polygon1	4.65	-0.293	0.			

Table: Section Designer Properties 16 - Shape Polygon, Part 1 of 2

SectionName	ShapeName	X	Y	Radius	ShapeMat	ZOrder	FillColor
		m	m	m			
TAB_MAZ	Polygon1	2.65	-0.433	0.			
TAB_MAZ	Polygon1	1.95	-1.65	0.			
TAB_MAZ	Polygon1	-1.95	-1.65	0.			
TAB_MAZ	Polygon1	-2.65	-0.433	0.			
TAB_MAZ	Polygon1	-4.65	-0.293	0.			
TAB_MAZ	Polygon1	-4.65	-0.093	0.			
TAB_RIOSTRA	Polygon1	0.	0.	0.	HP-40	1	Red
TAB_RIOSTRA	Polygon1	4.65	-0.093	0.			
TAB_RIOSTRA	Polygon1	4.65	-0.293	0.			
TAB_RIOSTRA	Polygon1	3.747	-0.3562	0.			
TAB_RIOSTRA	Polygon1	3.	-1.65	0.			
TAB_RIOSTRA	Polygon1	-3.	-1.65	0.			
TAB_RIOSTRA	Polygon1	-3.747	-0.3562	0.			
TAB_RIOSTRA	Polygon1	-4.65	-0.293	0.			
TAB_RIOSTRA	Polygon1	-4.65	-0.093	0.			

Table: Section Designer Properties 16 - Shape Polygon, Part 2 of 2

Table: Section Designer Properties 16 - Shape Polygon, Part 2 of 2

SectionName	ShapeName	Reinforcing	RebarMat	BarMatType	ConcCover
TAB_ALIG	Polygon1	No			
TAB_ALIG	Polygon1				
TAB_ALIG	Polygon1				
TAB_ALIG	Polygon1				
TAB_ALIG	Polygon1				
TAB_ALIG	Polygon1				
TAB_ALIG	Polygon1				
TAB_ALIG	Polygon1				
TAB_ALIG	Polygon1				
TAB_MAZ	Polygon1	No			
TAB_MAZ	Polygon1				
TAB_MAZ	Polygon1				
TAB_MAZ	Polygon1				
TAB_MAZ	Polygon1				
TAB_MAZ	Polygon1				
TAB_MAZ	Polygon1				
TAB_MAZ	Polygon1				
TAB_MAZ	Polygon1				
TAB_RIOSTRA	Polygon1	No			
TAB_RIOSTRA	Polygon1				
TAB_RIOSTRA	Polygon1				
TAB_RIOSTRA	Polygon1				
TAB_RIOSTRA	Polygon1				
TAB_RIOSTRA	Polygon1				
TAB_RIOSTRA	Polygon1				
TAB_RIOSTRA	Polygon1				
TAB_RIOSTRA	Polygon1				

Table: Section Designer Properties 30 - Fiber General, Part 1 of 2

Table: Section Designer Properties 30 - Fiber General, Part 1 of 2

SectionName	NumFibersD2	NumFibersD3	CoordSys	GridAngle	LumpRebar	FiberPMM
TAB_ALIG	3	3	Cartesian	0	No	No
TAB_MAZ	3	3	Cartesian	0	No	No
TAB_RIOSTRA	3	3	Cartesian	0	No	No

Table: Section Designer Properties 30 - Fiber General, Part 2 of 2

Table: Section Designer Properties 30 - Fiber General, Part 2 of 2

SectionName	FiberMC
TAB_ALIG	No
TAB_MAZ	No
TAB_RIOSTRA	No

Table: Section Designer Properties 31 - Stress Point, Part 1 of 2

Table: Section Designer Properties 31 - Stress Point, Part 1 of 2

SectionName	PointIndex	PointName	X	Y	Material	S12FactV2	S12FactV3
			m	m		m2	m2
TAB_ALIG	1	StressPt1	0.	0.	HP-40		
TAB_ALIG	2	StressPt2	0.	-1.65	HP-40		
TAB_MAZ	1	StressPt1	0.	0.	HP-40		
TAB_MAZ	2	StressPt2	0.	-1.65	HP-40		
TAB_RIOSTRA	1	StressPt1	0.	0.	HP-40		
TAB_RIOSTRA	2	StressPt2	0.	-1.65	HP-40		

Table: Section Designer Properties 31 - Stress Point, Part 2 of 2

Table: Section Designer Properties 31 - Stress Point, Part 2 of 2

SectionName	PointIndex	PointName	S12FactT	S13FactV2	S13FactV3	S13FactT
			m	m2	m2	m
TAB_ALIG	1	StressPt1				
TAB_ALIG	2	StressPt2				
TAB_MAZ	1	StressPt1				
TAB_MAZ	2	StressPt2				
TAB_RIOSTRA	1	StressPt1				
TAB_RIOSTRA	2	StressPt2				

Table: Tendon Layout Data 01 - General

Table: Tendon Layout Data 01 - General

Tendon	MaxDiscLen	LoadGroup	NumSegs
	m		
2	0.85	TABLERO	13

Table: Tendon Layout Data 02 - Segments

Table: Tendon Layout Data 02 - Segments

Tendon	SegType	XGlobal	YGlobal	ZGlobal
		m	m	m
2	Start of Tendon	0.	0.	-0.864
2	Parabola Intermediate Point	7.9	0.	-1.17525
2	Parabola End Point	15.8	0.	-1.279
2	Parabola Intermediate Point	22.65	0.	-1.1094
2	Parabola End Point	29.5	0.	-0.60059
2	Parabola Intermediate Point	32.	0.	-0.4149
2	Parabola End Point	34.5	0.	-0.353
2	Parabola Intermediate Point	37.	0.	-0.4149
2	Parabola End Point	39.5	0.	-0.60059
2	Parabola Intermediate Point	46.35	0.	-1.1094
2	Parabola End Point	53.2	0.	-1.279
2	Parabola Intermediate Point	61.1	0.	-1.17525
2	Parabola End Point	69.	0.	-0.864

Table: Tendon Loads - Tension Force Or Stress, Part 1 of 2

Table: Tendon Loads - Tension Force Or Stress, Part 1 of 2

Tendon	LoadPat	LoadType	Force	JackFrom	Curvature	Wobble	LossAnchor	LossEShort
			KN			1/m	m	KN/m2
2	TESADO	Force	42854.4	Both	0.21	0.00126	0.005	38620.

Table: Tendon Loads - Tension Force Or Stress, Part 2 of 2

Table: Tendon Loads - Tension Force Or Stress, Part 2 of 2

Tendon	LoadPat	LoadType	LossCreep	LossShrink	LossSRelax	AutoBridge	BridgeObj
			KN/m2	KN/m2	KN/m2		
2	TESADO	Force	80910.	50490.	85840.	No	

Table: Tendon Section Assignments

Table: Tendon Section Assignments

Tendon	TendonSect
2	12X24X0.5

Table: Tendon Section Definitions, Part 1 of 4

Table: Tendon Section Definitions, Part 1 of 4

TendonSect	ModelOpt	PreType	Material	Specify	Diameter	Area	TorsConst	I
					m	m2	m4	m4
12X24X0.5	Loads	Prestress	Y1860S7	Area	0.191492	0.0288	0.000132	0.000066

Table: Tendon Section Definitions, Part 2 of 4

Table: Tendon Section Definitions, Part 2 of 4

TendonSect	AS	Color	TotalWt	TotalMass	AMod	A2Mod	A3Mod	JMod
	m2		KN	KN-s2/m				
12X24X0.5	0.02592	Cyan	153.128	15.61	1.	1.	1.	1.

Table: Tendon Section Definitions, Part 3 of 4

Table: Tendon Section Definitions, Part 3 of 4

TendonSect	I2Mod	I3Mod	MMod	WMod	GUID
12X24X0.5	1.	1.	1.	1.	

Table: Tendon Section Definitions, Part 4 of 4

Table: Tendon Section Definitions, Part 4 of 4

TendonSect	Notes
12X24X0.5	Added 02/06/2017 12:37:57

Table: Vehicles 2 - General Vehicles 1 - General

Table: Vehicles 2 - General Vehicles 1 - General

VehName	NumInter	StayInLane
SC_CARRIL_1	2	No
SC_CARRIL_2	2	No
SC_CARRIL_REM	2	No
VP_CARRIL_1	3	No
VP_CARRIL_2	3	No

Table: Vehicles 3 - General Vehicles 2 - Loads

Table: Vehicles 3 - General Vehicles 2 - Loads

VehName	LoadType	UnifLoad	AxleLoad	MinDist	MaxDist
		KN/m	KN	m	m
SC_CARRIL_1	Leading Load	27.	0.		
SC_CARRIL_1	Trailing Load	27.			
SC_CARRIL_2	Leading Load	7.5	0.		
SC_CARRIL_2	Trailing Load	7.5			
SC_CARRIL_REM	Leading Load	5.	0.		
SC_CARRIL_REM	Trailing Load	5.			
VP_CARRIL_1	Leading Load	0.	300.		
VP_CARRIL_1	Fixed Length	0.	300.	1.2	
VP_CARRIL_1	Trailing Load	0.			

Table: Vehicles 3 - General Vehicles 2 - Loads

VehName	LoadType	UnifLoad	AxleLoad	MinDist	MaxDist
		KN/m	KN	m	m
VP_CARRIL_2	Leading Load	0.	200.		
VP_CARRIL_2	Fixed Length	0.	200.	1.2	
VP_CARRIL_2	Trailing Load	0.			

Table: Vehicles 4 - Vehicle Classes

Table: Vehicles 4 - Vehicle Classes

VehClass	VehName	ScaleFactor
SC_CARRIL_1	SC_CARRIL_1	1.
SC_CARRIL_2	SC_CARRIL_2	1.
SC_CARRIL_REM	SC_CARRIL_REM	1.
VP_CARRIL_1	VP_CARRIL_1	1.
VP_CARRIL_2	VP_CARRIL_2	1.

Table: Frame Loads - Point, Part 1 of 2

Table: Frame Loads - Point, Part 1 of 2

Frame	LoadPat	CoordSys	Type	Dir	DistType	RelDist
1	PCARGA_HIP_3	GLOBAL	Force	Gravity	RelDist	0.1684
1	PCARGA_HIP_3	GLOBAL	Force	Gravity	RelDist	0.1881
1	PCARGA_HIP_3	GLOBAL	Force	Gravity	RelDist	0.2316
1	PCARGA_HIP_3	GLOBAL	Force	Gravity	RelDist	0.2823
1	PCARGA_HIP_3	GLOBAL	Force	Gravity	RelDist	0.831
1	PCARGA_HIP_3	GLOBAL	Force	Gravity	RelDist	0.8113
1	PCARGA_HIP_3	GLOBAL	Force	Gravity	RelDist	0.7678
1	PCARGA_HIP_3	GLOBAL	Force	Gravity	RelDist	0.7171
1	PCARGA_HIP_1	GLOBAL	Force	Gravity	RelDist	0.0597
1	PCARGA_HIP_1	GLOBAL	Force	Gravity	RelDist	0.1104
1	PCARGA_HIP_1	GLOBAL	Force	Gravity	RelDist	0.1539
1	PCARGA_HIP_1	GLOBAL	Force	Gravity	RelDist	0.1736
1	PCARGA_HIP_1	GLOBAL	Force	Gravity	RelDist	0.3455
1	PCARGA_HIP_1	GLOBAL	Force	Gravity	RelDist	0.2949
1	PCARGA_HIP_1	GLOBAL	Force	Gravity	RelDist	0.2513
1	PCARGA_HIP_1	GLOBAL	Force	Gravity	RelDist	0.2316
1	PCARGA_HIP_2	GLOBAL	Force	Gravity	RelDist	0.9403
1	PCARGA_HIP_2	GLOBAL	Force	Gravity	RelDist	0.8896
1	PCARGA_HIP_2	GLOBAL	Force	Gravity	RelDist	0.8461
1	PCARGA_HIP_2	GLOBAL	Force	Gravity	RelDist	0.8264
1	PCARGA_HIP_2	GLOBAL	Force	Gravity	RelDist	0.6545
1	PCARGA_HIP_2	GLOBAL	Force	Gravity	RelDist	0.7051
1	PCARGA_HIP_2	GLOBAL	Force	Gravity	RelDist	0.7487
1	PCARGA_HIP_2	GLOBAL	Force	Gravity	RelDist	0.7684

Table: Frame Loads - Point, Part 2 of 2

Table: Frame Loads - Point, Part 2 of 2

Frame	LoadPat	AbsDist	Force	GUID
		m	KN	
1	PCARGA_HIP_3	11.62	196.133	070e87fc-af17-4a3a-be1d-8c7c3efab3d6
1	PCARGA_HIP_3	12.98	196.133	14d322dc-3023-49e1-9c9b-6300eee596af
1	PCARGA_HIP_3	15.98	215.746	28fc39b5-f5b6-4d58-ba7d-1de272729279
1	PCARGA_HIP_3	19.48	137.293	562e0b89-a582-4cca-9d49-fdb73633a5ee
1	PCARGA_HIP_3	57.34	196.133	1341c6ab-ed12-48cc-9ac6-437e23fedcc0
1	PCARGA_HIP_3	55.98	196.133	7e27cabf-d063-4e0c-b4a5-07d720d128be
1	PCARGA_HIP_3	52.98	215.746	a8ac8802-d03b-480f-a905-e7516384904b
1	PCARGA_HIP_3	49.48	137.293	bfa6dc52-f0ad-4a1c-88ba-ddbee90b46d2
1	PCARGA_HIP_1	4.1193	137.293	20e664b1-7d0a-43e5-81de-b6effa139719
1	PCARGA_HIP_1	7.6176	215.746	2c96a724-a382-4655-a4b1-3b5f2840de4a

Table: Frame Loads - Point, Part 2 of 2

Frame	LoadPat	AbsDist	Force	GUID
		m	KN	
1	PCARGA_HIP_1	10.6191	196.133	fecf0dfb-c682-49cf-8099-3a265e2081ec
1	PCARGA_HIP_1	11.9784	196.133	d91ab0d2-069e-4a12-a0cc-b76527870670
1	PCARGA_HIP_1	23.8395	137.293	bffe80d4-b993-4910-bd1c-0741608a598f
1	PCARGA_HIP_1	20.3481	215.746	f581f762-3aba-49c1-851c-754cf9fd21df
1	PCARGA_HIP_1	17.3397	196.133	fe386f9a-fd93-4554-86db-82912afdfb17
1	PCARGA_HIP_1	15.9804	196.133	a4d6b19f-2136-409a-880b-6e423ffd8647
1	PCARGA_HIP_2	64.88	137.293	0124ce25-a18f-4d2b-991d-d293f9de744d
1	PCARGA_HIP_2	61.38	215.746	916bbb22-d791-4324-abed-0d0b48f77d62
1	PCARGA_HIP_2	58.38	196.133	c4786001-7353-4f76-86c7-59599d58e215
1	PCARGA_HIP_2	57.02	196.133	64c25eb3-1a60-42c1-bd07-e486f43e36bb
1	PCARGA_HIP_2	45.16	137.293	18b5353d-081f-48dc-9a97-bed02c4c492d
1	PCARGA_HIP_2	48.65	215.746	8fcf9e47-94bf-4e5f-ad1f-3f69b4e2191f
1	PCARGA_HIP_2	51.66	196.133	d1e2f199-4cf3-492a-8c3a-671f8b181c94
1	PCARGA_HIP_2	53.02	196.133	8ce93956-96d0-437a-9dbd-c5455c651a2e

CÁLCULO DEL TABLERO

c/ COLUMELA nº15, C.P. 11004 CÁDIZ. Tlf: 956222763 Fax: 956210106
e-mail: acl@acl-estructuras.com http://www.acl-estructuras.com

ESTRUCTURA E1. ESFUERZOS EN TABLERO PARA TODOS LOS CASOS E HIPOTESIS DE CARGA

Frame	Station	OutputCase	CaseType	StepType	P	V2	V3	T	M2	M3	FrameElem	ElemStation
Text	m	Text	Text	Text	KN	KN	KN	KN-m	KN-m	KN-m	Text	m
1	0	DEAD	LinStatic		0.00	0.00	0.00	0.00	0.00	0.00	1-1	0
1	0.5	DEAD	LinStatic		-34.04	-2246.59	0.00	0.00	0.00	-65.43	1-2	0
1	1.5	DEAD	LinStatic		-34.04	-1957.78	0.00	0.00	0.00	2034.39	1-3	0
1	2	DEAD	LinStatic		-34.04	-1846.37	0.00	0.00	0.00	2984.14	1-4	0
1	3	DEAD	LinStatic		-34.04	-1682.08	0.00	0.00	0.00	4748.37	1-5	0
1	4	DEAD	LinStatic		-34.04	-1517.79	0.00	0.00	0.00	6348.30	1-6	0
1	5	DEAD	LinStatic		-34.04	-1353.50	0.00	0.00	0.00	7783.95	1-7	0
1	6	DEAD	LinStatic		-34.04	-1189.21	0.00	0.00	0.00	9055.31	1-8	0
1	7	DEAD	LinStatic		-34.04	-1024.92	0.00	0.00	0.00	10162.37	1-9	0
1	8	DEAD	LinStatic		-34.04	-860.63	0.00	0.00	0.00	11105.15	1-10	0
1	9	DEAD	LinStatic		-34.04	-696.35	0.00	0.00	0.00	11883.64	1-11	0
1	10	DEAD	LinStatic		-34.04	-532.06	0.00	0.00	0.00	12497.84	1-12	0
1	11	DEAD	LinStatic		-34.04	-367.77	0.00	0.00	0.00	12947.75	1-13	0
1	12	DEAD	LinStatic		-34.04	-203.48	0.00	0.00	0.00	13233.38	1-14	0
1	13	DEAD	LinStatic		-34.04	-39.19	0.00	0.00	0.00	13354.71	1-15	0
1	14	DEAD	LinStatic		-34.04	125.10	0.00	0.00	0.00	13311.75	1-16	0
1	15	DEAD	LinStatic		-34.04	289.39	0.00	0.00	0.00	13104.51	1-17	0
1	16	DEAD	LinStatic		-34.04	453.68	0.00	0.00	0.00	12732.97	1-18	0
1	17	DEAD	LinStatic		-34.04	617.97	0.00	0.00	0.00	12197.15	1-19	0
1	18	DEAD	LinStatic		-34.04	782.26	0.00	0.00	0.00	11497.04	1-20	0
1	19	DEAD	LinStatic		-34.04	946.55	0.00	0.00	0.00	10632.63	1-21	0
1	20	DEAD	LinStatic		-34.04	1110.84	0.00	0.00	0.00	9603.94	1-22	0
1	21	DEAD	LinStatic		-34.04	1275.13	0.00	0.00	0.00	8410.96	1-23	0
1	22	DEAD	LinStatic		-34.04	1439.41	0.00	0.00	0.00	7053.69	1-24	0
1	23	DEAD	LinStatic		-34.04	1603.70	0.00	0.00	0.00	5532.13	1-25	0
1	24	DEAD	LinStatic		-34.04	1767.99	0.00	0.00	0.00	3846.29	1-26	0
1	25	DEAD	LinStatic		-34.04	1932.28	0.00	0.00	0.00	1996.15	1-27	0
1	26	DEAD	LinStatic		-34.04	2096.57	0.00	0.00	0.00	-18.28	1-28	0
1	27	DEAD	LinStatic		-34.04	2260.86	0.00	0.00	0.00	-2196.99	1-29	0
1	28	DEAD	LinStatic		-34.04	2425.15	0.00	0.00	0.00	-4540.00	1-30	0
1	29	DEAD	LinStatic		-34.04	2589.44	0.00	0.00	0.00	-7047.29	1-31	0
1	30	DEAD	LinStatic		-34.04	2753.73	0.00	0.00	0.00	-9748.87	1-32	0
1	31	DEAD	LinStatic		-34.04	2918.02	0.00	0.00	0.00	-12554.75	1-33	0
1	32	DEAD	LinStatic		-34.04	3082.31	0.00	0.00	0.00	-15554.91	1-34	0
1	33	DEAD	LinStatic		-34.04	3246.60	0.00	0.00	0.00	-18718.07	1-35	0
1	33.75	DEAD	LinStatic		-34.04	3413.71	0.00	0.00	0.00	-21215.68	1-36	0
1	34.5	DEAD	LinStatic		-34.04	-3580.82	0.00	0.00	0.00	-23883.63	1-37	0
1	35.25	DEAD	LinStatic		-34.04	-3413.71	0.00	0.00	0.00	-21215.68	1-38	0
1	36	DEAD	LinStatic		-34.04	-3246.60	0.00	0.00	0.00	-18719.36	1-39	0
1	37	DEAD	LinStatic		-34.04	-3082.31	0.00	0.00	0.00	-15554.91	1-40	0
1	38	DEAD	LinStatic		-34.04	-2918.02	0.00	0.00	0.00	-12554.75	1-41	0
1	39	DEAD	LinStatic		-34.04	-2753.73	0.00	0.00	0.00	-9748.87	1-42	0
1	40	DEAD	LinStatic		-34.04	-2589.44	0.00	0.00	0.00	-7047.29	1-43	0
1	41	DEAD	LinStatic		-34.04	-2425.15	0.00	0.00	0.00	-4540.00	1-44	0
1	42	DEAD	LinStatic		-34.04	-2260.86	0.00	0.00	0.00	-2196.99	1-45	0
1	43	DEAD	LinStatic		-34.04	-2096.57	0.00	0.00	0.00	-18.28	1-46	0
1	44	DEAD	LinStatic		-34.04	-1932.28	0.00	0.00	0.00	1996.15	1-47	0
1	45	DEAD	LinStatic		-34.04	-1767.99	0.00	0.00	0.00	3846.29	1-48	0
1	46	DEAD	LinStatic		-34.04	-1603.70	0.00	0.00	0.00	5532.13	1-49	0
1	47	DEAD	LinStatic		-34.04	-1439.41	0.00	0.00	0.00	7053.69	1-50	0
1	48	DEAD	LinStatic		-34.04	-1275.13	0.00	0.00	0.00	8410.96	1-51	0
1	49	DEAD	LinStatic		-34.04	-1110.84	0.00	0.00	0.00	9603.94	1-52	0
1	50	DEAD	LinStatic		-34.04	-946.55	0.00	0.00	0.00	10632.63	1-53	0
1	51	DEAD	LinStatic		-34.04	-782.26	0.00	0.00	0.00	11497.04	1-54	0
1	52	DEAD	LinStatic		-34.04	-617.97	0.00	0.00	0.00	12197.15	1-55	0
1	53	DEAD	LinStatic		-34.04	-453.68	0.00	0.00	0.00	12732.97	1-56	0
1	54	DEAD	LinStatic		-34.04	-289.39	0.00	0.00	0.00	13104.51	1-57	0
1	55	DEAD	LinStatic		-34.04	-125.10	0.00	0.00	0.00	13311.75	1-58	0
1	56	DEAD	LinStatic		-34.04	39.19	0.00	0.00	0.00	13354.71	1-59	0
1	57	DEAD	LinStatic		-34.04	203.48	0.00	0.00	0.00	13233.38	1-60	0
1	58	DEAD	LinStatic		-34.04	367.77	0.00	0.00	0.00	12947.75	1-61	0
1	59	DEAD	LinStatic		-34.04	532.06	0.00	0.00	0.00	12497.84	1-62	0
1	60	DEAD	LinStatic		-34.04	696.35	0.00	0.00	0.00	11883.64	1-63	0
1	61	DEAD	LinStatic		-34.04	860.63	0.00	0.00	0.00	11105.15	1-64	0
1	62	DEAD	LinStatic		-34.04	1024.92	0.00	0.00	0.00	10162.37	1-65	0
1	63	DEAD	LinStatic		-34.04	1189.21	0.00	0.00	0.00	9055.31	1-66	0
1	64	DEAD	LinStatic		-34.04	1353.50	0.00	0.00	0.00	7783.95	1-67	0
1	65	DEAD	LinStatic		-34.04	1517.79	0.00	0.00	0.00	6348.30	1-68	0
1	66	DEAD	LinStatic		-34.04	1682.08	0.00	0.00	0.00	4748.37	1-69	0
1	67	DEAD	LinStatic		-34.04	1846.37	0.00	0.00	0.00	2985.43	1-70	0
1	67.5	DEAD	LinStatic		-34.04	1957.78	0.00	0.00	0.00	2036.75	1-71	0
1	68.5	DEAD	LinStatic		0.00	-144.41	0.00	0.00	0.00	-36.10	1-72	0
1	0	TESADO	LinStatic		0.00	0.00	0.00	0.00	0.00	0.00	1-1	0
1	0.5	TESADO	LinStatic		-32381.52	1301.21	0.00	0.00	0.00	-3222.65	1-2	0
1	1.5	TESADO	LinStatic		-32453.47	1219.32	0.00	0.00	0.00	-6752.71	1-3	0
1	2	TESADO	LinStatic		-32525.29	1137.04	0.00	0.00	0.00	-8607.16	1-4	0
1	3	TESADO	LinStatic		-32597.01	1054.38	0.00	0.00	0.00	-9747.33	1-5	0
1	4	TESADO	LinStatic		-32740.11	887.89	0.00	0.00	0.00	-10845.49	1-6	0
1	5	TESADO	LinStatic		-32811.49	804.07	0.00	0.00	0.00	-11778.80	1-7	0
1	6	TESADO	LinStatic		-32882.75	719.86	0.00	0.00	0.00	-12602.54	1-8	0
1	7	TESADO	LinStatic		-32953.90	635.27	0.00	0.00	0.00	-13331.02	1-9	0

ESTRUCTURA E1. ESFUERZOS EN TABLERO PARA TODOS LOS CASOS E HIPOTESIS DE CARGA

Frame	Station	OutputCase	CaseType	StepType	P	V2	V3	T	M2	M3	FrameElem	ElemStation
Text	m	Text	Text	Text	KN	KN	KN	KN-m	KN-m	KN-m	Text	m
1	8	TESADO	LinStatic		-33095.80	465.00	0.00	0.00	0.00	-14019.40	1-10	0
1	9	TESADO	LinStatic		-33166.54	379.33	0.00	0.00	0.00	-14528.63	1-11	0
1	10	TESADO	LinStatic		-33237.17	293.27	0.00	0.00	0.00	-14935.23	1-12	0
1	11	TESADO	LinStatic		-33378.07	120.02	0.00	0.00	0.00	-15317.82	1-13	0
1	12	TESADO	LinStatic		-33448.33	32.83	0.00	0.00	0.00	-15499.66	1-14	0
1	13	TESADO	LinStatic		-33518.48	-54.74	0.00	0.00	0.00	-15576.52	1-15	0
1	14	TESADO	LinStatic		-33588.50	-142.68	0.00	0.00	0.00	-15547.73	1-16	0
1	15	TESADO	LinStatic		-33721.36	-319.69	0.00	0.00	0.00	-15485.14	1-17	0
1	16	TESADO	LinStatic		-33768.08	-506.22	0.00	0.00	0.00	-15228.09	1-18	0
1	17	TESADO	LinStatic		-33808.31	-693.14	0.00	0.00	0.00	-14735.01	1-19	0
1	18	TESADO	LinStatic		-33735.52	-1064.80	0.00	0.00	0.00	-14031.28	1-20	0
1	19	TESADO	LinStatic		-33644.09	-1248.43	0.00	0.00	0.00	-12987.47	1-21	0
1	20	TESADO	LinStatic		-33551.85	-1430.98	0.00	0.00	0.00	-11657.63	1-22	0
1	21	TESADO	LinStatic		-33458.80	-1612.44	0.00	0.00	0.00	-10133.75	1-23	0
1	22	TESADO	LinStatic		-33270.32	-1972.01	0.00	0.00	0.00	-8394.02	1-24	0
1	23	TESADO	LinStatic		-33174.73	-2150.55	0.00	0.00	0.00	-6388.51	1-25	0
1	24	TESADO	LinStatic		-33078.36	-2327.93	0.00	0.00	0.00	-4168.90	1-26	0
1	25	TESADO	LinStatic		-32883.38	-2679.20	0.00	0.00	0.00	-1751.20	1-27	0
1	26	TESADO	LinStatic		-32784.80	-2853.07	0.00	0.00	0.00	929.86	1-28	0
1	27	TESADO	LinStatic		-32685.51	-3025.74	0.00	0.00	0.00	3826.68	1-29	0
1	28	TESADO	LinStatic		-32484.87	-3367.48	0.00	0.00	0.00	6871.96	1-30	0
1	29	TESADO	LinStatic		-32383.53	-3536.52	0.00	0.00	0.00	10214.72	1-31	0
1	30	TESADO	LinStatic		-32298.11	-2993.76	0.00	0.00	0.00	13695.70	1-32	0
1	31	TESADO	LinStatic		-32158.50	-2449.82	0.00	0.00	0.00	16526.97	1-33	0
1	32	TESADO	LinStatic		-31855.01	-1374.94	0.00	0.00	0.00	18894.21	1-34	0
1	33	TESADO	LinStatic		-31691.41	-844.83	0.00	0.00	0.00	21547.45	1-35	0
1	33.75	TESADO	LinStatic		-31518.96	-319.69	0.00	0.00	0.00	22293.43	1-36	0
1	34.5	TESADO	LinStatic		-31518.96	319.68	0.00	0.00	0.00	22533.19	1-37	0
1	35.25	TESADO	LinStatic		-31691.41	844.83	0.00	0.00	0.00	22181.07	1-38	0
1	36	TESADO	LinStatic		-31855.01	1374.94	0.00	0.00	0.00	20269.15	1-39	0
1	37	TESADO	LinStatic		-32158.50	2449.82	0.00	0.00	0.00	18976.79	1-40	0
1	38	TESADO	LinStatic		-32298.11	2993.77	0.00	0.00	0.00	16689.47	1-41	0
1	39	TESADO	LinStatic		-32383.53	3536.52	0.00	0.00	0.00	13751.23	1-42	0
1	40	TESADO	LinStatic		-32484.87	3367.48	0.00	0.00	0.00	10239.42	1-43	0
1	41	TESADO	LinStatic		-32685.51	3025.75	0.00	0.00	0.00	6852.20	1-44	0
1	42	TESADO	LinStatic		-32784.80	2853.07	0.00	0.00	0.00	3782.90	1-45	0
1	43	TESADO	LinStatic		-32883.38	2679.20	0.00	0.00	0.00	921.97	1-46	0
1	44	TESADO	LinStatic		-33078.36	2327.93	0.00	0.00	0.00	-1838.01	1-47	0
1	45	TESADO	LinStatic		-33174.73	2150.55	0.00	0.00	0.00	-4238.00	1-48	0
1	46	TESADO	LinStatic		-33270.32	1972.02	0.00	0.00	0.00	-6471.05	1-49	0
1	47	TESADO	LinStatic		-33458.80	1612.44	0.00	0.00	0.00	-8521.36	1-50	0
1	48	TESADO	LinStatic		-33551.85	1430.98	0.00	0.00	0.00	-10225.69	1-51	0
1	49	TESADO	LinStatic		-33644.09	1248.43	0.00	0.00	0.00	-11709.09	1-52	0
1	50	TESADO	LinStatic		-33735.52	1064.80	0.00	0.00	0.00	-12985.53	1-53	0
1	51	TESADO	LinStatic		-33808.31	693.14	0.00	0.00	0.00	-14041.92	1-54	0
1	52	TESADO	LinStatic		-33768.08	506.22	0.00	0.00	0.00	-14721.92	1-55	0
1	53	TESADO	LinStatic		-33721.36	319.68	0.00	0.00	0.00	-15166.50	1-56	0
1	54	TESADO	LinStatic		-33588.50	142.68	0.00	0.00	0.00	-15405.10	1-57	0
1	55	TESADO	LinStatic		-33518.48	54.73	0.00	0.00	0.00	-15521.82	1-58	0
1	56	TESADO	LinStatic		-33448.33	-32.83	0.00	0.00	0.00	-15532.52	1-59	0
1	57	TESADO	LinStatic		-33378.07	-120.02	0.00	0.00	0.00	-15437.88	1-60	0
1	58	TESADO	LinStatic		-33237.17	-293.27	0.00	0.00	0.00	-15228.53	1-61	0
1	59	TESADO	LinStatic		-33166.54	-379.33	0.00	0.00	0.00	-14907.98	1-62	0
1	60	TESADO	LinStatic		-33095.80	-465.01	0.00	0.00	0.00	-14484.43	1-63	0
1	61	TESADO	LinStatic		-32953.90	-635.28	0.00	0.00	0.00	-13985.32	1-64	0
1	62	TESADO	LinStatic		-32882.75	-719.87	0.00	0.00	0.00	-13322.42	1-65	0
1	63	TESADO	LinStatic		-32811.49	-804.07	0.00	0.00	0.00	-12527.89	1-66	0
1	64	TESADO	LinStatic		-32740.11	-887.90	0.00	0.00	0.00	-11733.39	1-67	0
1	65	TESADO	LinStatic		-32597.01	-1054.38	0.00	0.00	0.00	-10804.72	1-68	0
1	66	TESADO	LinStatic		-32525.30	-1137.05	0.00	0.00	0.00	-9744.21	1-69	0
1	67	TESADO	LinStatic		-32453.47	-1219.32	0.00	0.00	0.00	-7352.38	1-70	0
1	67.5	TESADO	LinStatic		-32381.53	-1301.21	0.00	0.00	0.00	-4523.86	1-71	0
1	68.5	TESADO	LinStatic		0.00	0.00	0.00	0.00	0.00	0.00	1-72	0
1	0	PAVIMENTO	LinStatic		0.00	0.00	0.00	0.00	0.00	0.00	1-1	0
1	0.5	PAVIMENTO	LinStatic		-3.34	-176.13	0.00	0.00	0.00	-4.60	1-2	0
1	1.5	PAVIMENTO	LinStatic		-3.34	-162.33	0.00	0.00	0.00	164.40	1-3	0
1	2	PAVIMENTO	LinStatic		-3.34	-155.43	0.00	0.00	0.00	243.71	1-4	0
1	3	PAVIMENTO	LinStatic		-3.34	-141.63	0.00	0.00	0.00	392.25	1-5	0
1	4	PAVIMENTO	LinStatic		-3.34	-127.83	0.00	0.00	0.00	526.98	1-6	0
1	5	PAVIMENTO	LinStatic		-3.34	-114.03	0.00	0.00	0.00	647.91	1-7	0
1	6	PAVIMENTO	LinStatic		-3.34	-100.23	0.00	0.00	0.00	755.04	1-8	0
1	7	PAVIMENTO	LinStatic		-3.34	-86.43	0.00	0.00	0.00	848.37	1-9	0
1	8	PAVIMENTO	LinStatic		-3.34	-72.63	0.00	0.00	0.00	927.90	1-10	0
1	9	PAVIMENTO	LinStatic		-3.34	-58.83	0.00	0.00	0.00	993.63	1-11	0
1	10	PAVIMENTO	LinStatic		-3.34	-45.03	0.00	0.00	0.00	1045.56	1-12	0
1	11	PAVIMENTO	LinStatic		-3.34	-31.23	0.00	0.00	0.00	1083.69	1-13	0
1	12	PAVIMENTO	LinStatic		-3.34	-17.43	0.00	0.00	0.00	1108.03	1-14	0
1	13	PAVIMENTO	LinStatic		-3.34	-3.63	0.00	0.00	0.00	1118.56	1-15	0
1	14	PAVIMENTO	LinStatic		-3.34	10.17	0.00	0.00	0.00	1115.29	1-16	0
1	15	PAVIMENTO	LinStatic		-3.34	23.97	0.00	0.00	0.00	1098.22	1-17	0
1	16	PAVIMENTO	LinStatic		-3.34	37.77	0.00	0.00	0.00	1067.35	1-18	0

ESTRUCTURA E1. ESFUERZOS EN TABLERO PARA TODOS LOS CASOS E HIPOTESIS DE CARGA

Frame	Station	OutputCase	CaseType	StepType	P	V2	V3	T	M2	M3	FrameElem	ElemStation
Text	m	Text	Text	Text	KN	KN	KN	KN-m	KN-m	KN-m	Text	m
1	17	PAVIMENTO	LinStatic		-3.34	51.57	0.00	0.00	0.00	1022.68	1-19	0
1	18	PAVIMENTO	LinStatic		-3.34	65.37	0.00	0.00	0.00	964.21	1-20	0
1	19	PAVIMENTO	LinStatic		-3.34	79.17	0.00	0.00	0.00	891.94	1-21	0
1	20	PAVIMENTO	LinStatic		-3.34	92.97	0.00	0.00	0.00	805.87	1-22	0
1	21	PAVIMENTO	LinStatic		-3.34	106.77	0.00	0.00	0.00	706.00	1-23	0
1	22	PAVIMENTO	LinStatic		-3.34	120.57	0.00	0.00	0.00	592.34	1-24	0
1	23	PAVIMENTO	LinStatic		-3.34	134.37	0.00	0.00	0.00	464.87	1-25	0
1	24	PAVIMENTO	LinStatic		-3.34	148.17	0.00	0.00	0.00	323.60	1-26	0
1	25	PAVIMENTO	LinStatic		-3.34	161.97	0.00	0.00	0.00	168.53	1-27	0
1	26	PAVIMENTO	LinStatic		-3.34	175.77	0.00	0.00	0.00	-0.34	1-28	0
1	27	PAVIMENTO	LinStatic		-3.34	189.57	0.00	0.00	0.00	-183.01	1-29	0
1	28	PAVIMENTO	LinStatic		-3.34	203.37	0.00	0.00	0.00	-379.48	1-30	0
1	29	PAVIMENTO	LinStatic		-3.34	217.17	0.00	0.00	0.00	-589.75	1-31	0
1	30	PAVIMENTO	LinStatic		-3.34	230.97	0.00	0.00	0.00	-813.82	1-32	0
1	31	PAVIMENTO	LinStatic		-3.34	244.77	0.00	0.00	0.00	-1051.68	1-33	0
1	32	PAVIMENTO	LinStatic		-3.34	258.57	0.00	0.00	0.00	-1303.35	1-34	0
1	33	PAVIMENTO	LinStatic		-3.34	272.37	0.00	0.00	0.00	-1568.70	1-35	0
1	33.75	PAVIMENTO	LinStatic		-3.34	282.72	0.00	0.00	0.00	-1776.85	1-36	0
1	34.5	PAVIMENTO	LinStatic		-3.34	-293.07	0.00	0.00	0.00	-1991.77	1-37	0
1	35.25	PAVIMENTO	LinStatic		-3.34	-282.72	0.00	0.00	0.00	-1776.85	1-38	0
1	36	PAVIMENTO	LinStatic		-3.34	-272.37	0.00	0.00	0.00	-1568.82	1-39	0
1	37	PAVIMENTO	LinStatic		-3.34	-258.57	0.00	0.00	0.00	-1303.35	1-40	0
1	38	PAVIMENTO	LinStatic		-3.34	-244.77	0.00	0.00	0.00	-1051.68	1-41	0
1	39	PAVIMENTO	LinStatic		-3.34	-230.97	0.00	0.00	0.00	-813.82	1-42	0
1	40	PAVIMENTO	LinStatic		-3.34	-217.17	0.00	0.00	0.00	-589.75	1-43	0
1	41	PAVIMENTO	LinStatic		-3.34	-203.37	0.00	0.00	0.00	-379.48	1-44	0
1	42	PAVIMENTO	LinStatic		-3.34	-189.57	0.00	0.00	0.00	-183.01	1-45	0
1	43	PAVIMENTO	LinStatic		-3.34	-175.77	0.00	0.00	0.00	-0.34	1-46	0
1	44	PAVIMENTO	LinStatic		-3.34	-161.97	0.00	0.00	0.00	168.53	1-47	0
1	45	PAVIMENTO	LinStatic		-3.34	-148.17	0.00	0.00	0.00	323.60	1-48	0
1	46	PAVIMENTO	LinStatic		-3.34	-134.37	0.00	0.00	0.00	464.87	1-49	0
1	47	PAVIMENTO	LinStatic		-3.34	-120.57	0.00	0.00	0.00	592.34	1-50	0
1	48	PAVIMENTO	LinStatic		-3.34	-106.77	0.00	0.00	0.00	706.00	1-51	0
1	49	PAVIMENTO	LinStatic		-3.34	-92.97	0.00	0.00	0.00	805.87	1-52	0
1	50	PAVIMENTO	LinStatic		-3.34	-79.17	0.00	0.00	0.00	891.94	1-53	0
1	51	PAVIMENTO	LinStatic		-3.34	-65.37	0.00	0.00	0.00	964.21	1-54	0
1	52	PAVIMENTO	LinStatic		-3.34	-51.57	0.00	0.00	0.00	1022.68	1-55	0
1	53	PAVIMENTO	LinStatic		-3.34	-37.77	0.00	0.00	0.00	1067.35	1-56	0
1	54	PAVIMENTO	LinStatic		-3.34	-23.97	0.00	0.00	0.00	1098.22	1-57	0
1	55	PAVIMENTO	LinStatic		-3.34	-10.17	0.00	0.00	0.00	1115.29	1-58	0
1	56	PAVIMENTO	LinStatic		-3.34	3.63	0.00	0.00	0.00	1118.56	1-59	0
1	57	PAVIMENTO	LinStatic		-3.34	17.43	0.00	0.00	0.00	1108.03	1-60	0
1	58	PAVIMENTO	LinStatic		-3.34	31.23	0.00	0.00	0.00	1083.69	1-61	0
1	59	PAVIMENTO	LinStatic		-3.34	45.03	0.00	0.00	0.00	1045.56	1-62	0
1	60	PAVIMENTO	LinStatic		-3.34	58.83	0.00	0.00	0.00	993.63	1-63	0
1	61	PAVIMENTO	LinStatic		-3.34	72.63	0.00	0.00	0.00	927.90	1-64	0
1	62	PAVIMENTO	LinStatic		-3.34	86.43	0.00	0.00	0.00	848.37	1-65	0
1	63	PAVIMENTO	LinStatic		-3.34	100.23	0.00	0.00	0.00	755.04	1-66	0
1	64	PAVIMENTO	LinStatic		-3.34	114.03	0.00	0.00	0.00	647.91	1-67	0
1	65	PAVIMENTO	LinStatic		-3.34	127.83	0.00	0.00	0.00	526.98	1-68	0
1	66	PAVIMENTO	LinStatic		-3.34	141.63	0.00	0.00	0.00	392.25	1-69	0
1	67	PAVIMENTO	LinStatic		-3.34	155.43	0.00	0.00	0.00	243.84	1-70	0
1	67.5	PAVIMENTO	LinStatic		-3.34	162.33	0.00	0.00	0.00	164.63	1-71	0
1	68.5	PAVIMENTO	LinStatic		0.00	-6.90	0.00	0.00	0.00	-1.73	1-72	0
1	0	BARRERAS	LinStatic		0.00	0.00	0.00	0.00	0.00	0.00	1-1	0
1	0.5	BARRERAS	LinStatic		-3.39	-178.68	0.00	0.00	0.00	-4.67	1-2	0
1	1.5	BARRERAS	LinStatic		-3.39	-164.68	0.00	0.00	0.00	166.78	1-3	0
1	2	BARRERAS	LinStatic		-3.39	-157.68	0.00	0.00	0.00	247.25	1-4	0
1	3	BARRERAS	LinStatic		-3.39	-143.68	0.00	0.00	0.00	397.93	1-5	0
1	4	BARRERAS	LinStatic		-3.39	-129.68	0.00	0.00	0.00	534.61	1-6	0
1	5	BARRERAS	LinStatic		-3.39	-115.68	0.00	0.00	0.00	657.30	1-7	0
1	6	BARRERAS	LinStatic		-3.39	-101.68	0.00	0.00	0.00	765.98	1-8	0
1	7	BARRERAS	LinStatic		-3.39	-87.68	0.00	0.00	0.00	860.66	1-9	0
1	8	BARRERAS	LinStatic		-3.39	-73.68	0.00	0.00	0.00	941.35	1-10	0
1	9	BARRERAS	LinStatic		-3.39	-59.68	0.00	0.00	0.00	1008.03	1-11	0
1	10	BARRERAS	LinStatic		-3.39	-45.68	0.00	0.00	0.00	1060.72	1-12	0
1	11	BARRERAS	LinStatic		-3.39	-31.68	0.00	0.00	0.00	1099.40	1-13	0
1	12	BARRERAS	LinStatic		-3.39	-17.68	0.00	0.00	0.00	1124.08	1-14	0
1	13	BARRERAS	LinStatic		-3.39	-3.68	0.00	0.00	0.00	1134.77	1-15	0
1	14	BARRERAS	LinStatic		-3.39	10.32	0.00	0.00	0.00	1131.45	1-16	0
1	15	BARRERAS	LinStatic		-3.39	24.32	0.00	0.00	0.00	1114.13	1-17	0
1	16	BARRERAS	LinStatic		-3.39	38.32	0.00	0.00	0.00	1082.82	1-18	0
1	17	BARRERAS	LinStatic		-3.39	52.32	0.00	0.00	0.00	1037.50	1-19	0
1	18	BARRERAS	LinStatic		-3.39	66.32	0.00	0.00	0.00	978.19	1-20	0
1	19	BARRERAS	LinStatic		-3.39	80.32	0.00	0.00	0.00	904.87	1-21	0
1	20	BARRERAS	LinStatic		-3.39	94.32	0.00	0.00	0.00	817.55	1-22	0
1	21	BARRERAS	LinStatic		-3.39	108.32	0.00	0.00	0.00	716.24	1-23	0
1	22	BARRERAS	LinStatic		-3.39	122.32	0.00	0.00	0.00	600.92	1-24	0
1	23	BARRERAS	LinStatic		-3.39	136.32	0.00	0.00	0.00	471.60	1-25	0
1	24	BARRERAS	LinStatic		-3.39	150.32	0.00	0.00	0.00	328.29	1-26	0
1	25	BARRERAS	LinStatic		-3.39	164.32	0.00	0.00	0.00	170.97	1-27	0

ESTRUCTURA E1. ESFUERZOS EN TABLERO PARA TODOS LOS CASOS E HIPOTESIS DE CARGA

Frame	Station	OutputCase	CaseType	StepType	P	V2	V3	T	M2	M3	FrameElem	ElemStation
Text	m	Text	Text	Text	KN	KN	KN	KN-m	KN-m	KN-m	Text	m
1	26	BARRERAS	LinStatic		-3.39	178.32	0.00	0.00	0.00	-0.34	1-28	0
1	27	BARRERAS	LinStatic		-3.39	192.32	0.00	0.00	0.00	-185.66	1-29	0
1	28	BARRERAS	LinStatic		-3.39	206.32	0.00	0.00	0.00	-384.98	1-30	0
1	29	BARRERAS	LinStatic		-3.39	220.32	0.00	0.00	0.00	-598.29	1-31	0
1	30	BARRERAS	LinStatic		-3.39	234.32	0.00	0.00	0.00	-825.61	1-32	0
1	31	BARRERAS	LinStatic		-3.39	248.32	0.00	0.00	0.00	-1066.93	1-33	0
1	32	BARRERAS	LinStatic		-3.39	262.32	0.00	0.00	0.00	-1321.24	1-34	0
1	33	BARRERAS	LinStatic		-3.39	276.32	0.00	0.00	0.00	-1591.43	1-35	0
1	33.75	BARRERAS	LinStatic		-3.39	286.82	0.00	0.00	0.00	-1801.61	1-36	0
1	34.5	BARRERAS	LinStatic		-3.39	-297.32	0.00	0.00	0.00	-2021.66	1-37	0
1	35.25	BARRERAS	LinStatic		-3.39	-286.82	0.00	0.00	0.00	-1801.61	1-38	0
1	36	BARRERAS	LinStatic		-3.39	-276.32	0.00	0.00	0.00	-1591.56	1-39	0
1	37	BARRERAS	LinStatic		-3.39	-262.32	0.00	0.00	0.00	-1321.24	1-40	0
1	38	BARRERAS	LinStatic		-3.39	-248.32	0.00	0.00	0.00	-1066.93	1-41	0
1	39	BARRERAS	LinStatic		-3.39	-234.32	0.00	0.00	0.00	-825.61	1-42	0
1	40	BARRERAS	LinStatic		-3.39	-220.32	0.00	0.00	0.00	-598.29	1-43	0
1	41	BARRERAS	LinStatic		-3.39	-206.32	0.00	0.00	0.00	-384.98	1-44	0
1	42	BARRERAS	LinStatic		-3.39	-192.32	0.00	0.00	0.00	-185.66	1-45	0
1	43	BARRERAS	LinStatic		-3.39	-178.32	0.00	0.00	0.00	-0.34	1-46	0
1	44	BARRERAS	LinStatic		-3.39	-164.32	0.00	0.00	0.00	170.97	1-47	0
1	45	BARRERAS	LinStatic		-3.39	-150.32	0.00	0.00	0.00	328.29	1-48	0
1	46	BARRERAS	LinStatic		-3.39	-136.32	0.00	0.00	0.00	471.60	1-49	0
1	47	BARRERAS	LinStatic		-3.39	-122.32	0.00	0.00	0.00	600.92	1-50	0
1	48	BARRERAS	LinStatic		-3.39	-108.32	0.00	0.00	0.00	716.24	1-51	0
1	49	BARRERAS	LinStatic		-3.39	-94.32	0.00	0.00	0.00	817.55	1-52	0
1	50	BARRERAS	LinStatic		-3.39	-80.32	0.00	0.00	0.00	904.87	1-53	0
1	51	BARRERAS	LinStatic		-3.39	-66.32	0.00	0.00	0.00	978.19	1-54	0
1	52	BARRERAS	LinStatic		-3.39	-52.32	0.00	0.00	0.00	1037.50	1-55	0
1	53	BARRERAS	LinStatic		-3.39	-38.32	0.00	0.00	0.00	1082.82	1-56	0
1	54	BARRERAS	LinStatic		-3.39	-24.32	0.00	0.00	0.00	1114.13	1-57	0
1	55	BARRERAS	LinStatic		-3.39	-10.32	0.00	0.00	0.00	1131.45	1-58	0
1	56	BARRERAS	LinStatic		-3.39	3.68	0.00	0.00	0.00	1134.77	1-59	0
1	57	BARRERAS	LinStatic		-3.39	17.68	0.00	0.00	0.00	1124.08	1-60	0
1	58	BARRERAS	LinStatic		-3.39	31.68	0.00	0.00	0.00	1099.40	1-61	0
1	59	BARRERAS	LinStatic		-3.39	45.68	0.00	0.00	0.00	1060.72	1-62	0
1	60	BARRERAS	LinStatic		-3.39	59.68	0.00	0.00	0.00	1008.03	1-63	0
1	61	BARRERAS	LinStatic		-3.39	73.68	0.00	0.00	0.00	941.35	1-64	0
1	62	BARRERAS	LinStatic		-3.39	87.68	0.00	0.00	0.00	860.66	1-65	0
1	63	BARRERAS	LinStatic		-3.39	101.68	0.00	0.00	0.00	765.98	1-66	0
1	64	BARRERAS	LinStatic		-3.39	115.68	0.00	0.00	0.00	657.30	1-67	0
1	65	BARRERAS	LinStatic		-3.39	129.68	0.00	0.00	0.00	534.61	1-68	0
1	66	BARRERAS	LinStatic		-3.39	143.68	0.00	0.00	0.00	397.93	1-69	0
1	67	BARRERAS	LinStatic		-3.39	157.68	0.00	0.00	0.00	247.37	1-70	0
1	67.5	BARRERAS	LinStatic		-3.39	164.68	0.00	0.00	0.00	167.02	1-71	0
1	68.5	BARRERAS	LinStatic		0.00	-7.00	0.00	0.00	0.00	-1.75	1-72	0
1	0	SC_CARRIL_1	LinMoving	Max P	0.00	0.00	0.00	0.00	0.00	0.00	1-1	0
1	0.5	SC_CARRIL_1	LinMoving	Max P	0.16	18.27	0.14	89.35	0.05	0.14	1-2	0
1	1.5	SC_CARRIL_1	LinMoving	Max P	0.16	18.27	0.14	89.34	-0.09	-18.13	1-3	0
1	2	SC_CARRIL_1	LinMoving	Max P	0.16	18.27	0.14	89.34	-0.17	-27.26	1-4	0
1	3	SC_CARRIL_1	LinMoving	Max P	0.16	18.27	0.14	89.34	-0.31	-45.53	1-5	0
1	4	SC_CARRIL_1	LinMoving	Max P	0.16	18.27	0.14	89.34	-0.45	-63.80	1-6	0
1	5	SC_CARRIL_1	LinMoving	Max P	0.16	18.27	0.14	89.34	-0.60	-82.08	1-7	0
1	6	SC_CARRIL_1	LinMoving	Max P	0.16	18.27	0.14	89.34	-0.74	-100.35	1-8	0
1	7	SC_CARRIL_1	LinMoving	Max P	0.16	18.27	0.14	89.34	-0.89	-118.63	1-9	0
1	8	SC_CARRIL_1	LinMoving	Max P	0.16	18.27	0.14	89.34	-1.03	-136.90	1-10	0
1	9	SC_CARRIL_1	LinMoving	Max P	0.16	18.27	0.14	89.34	-1.17	-155.17	1-11	0
1	10	SC_CARRIL_1	LinMoving	Max P	0.16	18.27	0.14	89.34	-1.32	-173.45	1-12	0
1	11	SC_CARRIL_1	LinMoving	Max P	0.16	18.27	0.14	89.34	-1.46	-191.72	1-13	0
1	12	SC_CARRIL_1	LinMoving	Max P	0.16	18.27	0.14	89.34	-1.61	-209.99	1-14	0
1	13	SC_CARRIL_1	LinMoving	Max P	0.16	18.27	0.14	89.34	-1.75	-228.27	1-15	0
1	14	SC_CARRIL_1	LinMoving	Max P	0.16	18.27	0.14	89.34	-1.90	-246.54	1-16	0
1	15	SC_CARRIL_1	LinMoving	Max P	0.16	18.27	0.14	89.34	-2.04	-264.82	1-17	0
1	16	SC_CARRIL_1	LinMoving	Max P	0.16	18.27	0.14	89.34	-2.18	-283.09	1-18	0
1	17	SC_CARRIL_1	LinMoving	Max P	0.16	18.27	0.14	89.34	-2.33	-301.36	1-19	0
1	18	SC_CARRIL_1	LinMoving	Max P	0.16	18.27	0.14	89.34	-2.47	-319.64	1-20	0
1	19	SC_CARRIL_1	LinMoving	Max P	0.16	18.27	0.14	89.34	-2.62	-337.91	1-21	0
1	20	SC_CARRIL_1	LinMoving	Max P	0.16	18.27	0.14	89.34	-2.76	-356.18	1-22	0
1	21	SC_CARRIL_1	LinMoving	Max P	0.16	18.27	0.14	89.34	-2.90	-374.46	1-23	0
1	22	SC_CARRIL_1	LinMoving	Max P	0.16	18.27	0.14	89.34	-3.05	-392.73	1-24	0
1	23	SC_CARRIL_1	LinMoving	Max P	0.16	18.27	0.14	89.34	-3.19	-411.01	1-25	0
1	24	SC_CARRIL_1	LinMoving	Max P	0.16	18.27	0.14	89.34	-3.34	-429.28	1-26	0
1	25	SC_CARRIL_1	LinMoving	Max P	0.16	18.27	0.14	89.34	-3.48	-447.55	1-27	0
1	26	SC_CARRIL_1	LinMoving	Max P	0.16	18.27	0.14	89.34	-3.62	-465.83	1-28	0
1	27	SC_CARRIL_1	LinMoving	Max P	0.16	18.27	0.14	89.34	-3.77	-484.10	1-29	0
1	28	SC_CARRIL_1	LinMoving	Max P	0.16	18.27	0.14	89.34	-3.91	-502.37	1-30	0
1	29	SC_CARRIL_1	LinMoving	Max P	0.16	18.27	0.14	89.34	-4.06	-520.65	1-31	0
1	30	SC_CARRIL_1	LinMoving	Max P	0.16	18.27	0.14	89.34	-4.20	-538.92	1-32	0
1	31	SC_CARRIL_1	LinMoving	Max P	0.16	18.27	0.14	89.34	-4.35	-557.20	1-33	0
1	32	SC_CARRIL_1	LinMoving	Max P	0.16	18.27	0.14	89.34	-4.49	-575.47	1-34	0
1	33	SC_CARRIL_1	LinMoving	Max P	0.16	18.27	0.14	89.34	-4.63	-593.75	1-35	0
1	33.75	SC_CARRIL_1	LinMoving	Max P	0.16	18.27	0.14	89.34	-4.74	-607.45	1-36	0

ESTRUCTURA E1. ESFUERZOS EN TABLERO PARA TODOS LOS CASOS E HIPOTESIS DE CARGA

Frame	Station	OutputCase	CaseType	StepType	P	V2	V3	T	M2	M3	FrameElem	ElemStation
Text	m	Text	Text	Text	KN	KN	KN	KN-m	KN-m	KN-m	Text	m
1	34.5	SC_CARRIL_1	LinMoving	Max P	0.16	-18.78	-0.14	-88.07	-4.85	-621.42	1-37	0
1	35.25	SC_CARRIL_1	LinMoving	Max P	0.16	-18.27	-0.14	-89.34	-4.74	-607.46	1-38	0
1	36	SC_CARRIL_1	LinMoving	Max P	0.16	-18.27	-0.14	-89.34	-4.63	-593.74	1-39	0
1	37	SC_CARRIL_1	LinMoving	Max P	0.16	-18.27	-0.14	-89.34	-4.49	-575.47	1-40	0
1	38	SC_CARRIL_1	LinMoving	Max P	0.16	-18.27	-0.14	-89.34	-4.35	-557.20	1-41	0
1	39	SC_CARRIL_1	LinMoving	Max P	0.16	-18.27	-0.14	-89.34	-4.20	-538.92	1-42	0
1	40	SC_CARRIL_1	LinMoving	Max P	0.16	-18.27	-0.14	-89.34	-4.06	-520.65	1-43	0
1	41	SC_CARRIL_1	LinMoving	Max P	0.16	-18.27	-0.14	-89.34	-3.91	-502.38	1-44	0
1	42	SC_CARRIL_1	LinMoving	Max P	0.16	-18.27	-0.14	-89.34	-3.77	-484.10	1-45	0
1	43	SC_CARRIL_1	LinMoving	Max P	0.16	-18.27	-0.14	-89.34	-3.63	-465.83	1-46	0
1	44	SC_CARRIL_1	LinMoving	Max P	0.16	-18.27	-0.14	-89.34	-3.48	-447.55	1-47	0
1	45	SC_CARRIL_1	LinMoving	Max P	0.16	-18.27	-0.14	-89.34	-3.34	-429.28	1-48	0
1	46	SC_CARRIL_1	LinMoving	Max P	0.16	-18.27	-0.14	-89.34	-3.19	-411.01	1-49	0
1	47	SC_CARRIL_1	LinMoving	Max P	0.16	-18.27	-0.14	-89.34	-3.05	-392.73	1-50	0
1	48	SC_CARRIL_1	LinMoving	Max P	0.16	-18.27	-0.14	-89.34	-2.90	-374.46	1-51	0
1	49	SC_CARRIL_1	LinMoving	Max P	0.16	-18.27	-0.14	-89.34	-2.76	-356.19	1-52	0
1	50	SC_CARRIL_1	LinMoving	Max P	0.16	-18.27	-0.14	-89.34	-2.62	-337.91	1-53	0
1	51	SC_CARRIL_1	LinMoving	Max P	0.16	-18.27	-0.14	-89.34	-2.47	-319.64	1-54	0
1	52	SC_CARRIL_1	LinMoving	Max P	0.16	-18.27	-0.14	-89.34	-2.33	-301.36	1-55	0
1	53	SC_CARRIL_1	LinMoving	Max P	0.16	-18.27	-0.14	-89.34	-2.18	-283.09	1-56	0
1	54	SC_CARRIL_1	LinMoving	Max P	0.16	-18.27	-0.14	-89.34	-2.04	-264.82	1-57	0
1	55	SC_CARRIL_1	LinMoving	Max P	0.16	-18.27	-0.14	-89.34	-1.90	-246.54	1-58	0
1	56	SC_CARRIL_1	LinMoving	Max P	0.16	-18.27	-0.14	-89.34	-1.75	-228.27	1-59	0
1	57	SC_CARRIL_1	LinMoving	Max P	0.16	-18.27	-0.14	-89.34	-1.61	-209.99	1-60	0
1	58	SC_CARRIL_1	LinMoving	Max P	0.16	-18.27	-0.14	-89.34	-1.46	-191.72	1-61	0
1	59	SC_CARRIL_1	LinMoving	Max P	0.16	-18.27	-0.14	-89.34	-1.32	-173.45	1-62	0
1	60	SC_CARRIL_1	LinMoving	Max P	0.16	-18.27	-0.14	-89.34	-1.17	-155.17	1-63	0
1	61	SC_CARRIL_1	LinMoving	Max P	0.16	-18.27	-0.14	-89.34	-1.03	-136.90	1-64	0
1	62	SC_CARRIL_1	LinMoving	Max P	0.16	-18.27	-0.14	-89.34	-0.89	-118.63	1-65	0
1	63	SC_CARRIL_1	LinMoving	Max P	0.16	-18.27	-0.14	-89.34	-0.74	-100.35	1-66	0
1	64	SC_CARRIL_1	LinMoving	Max P	0.16	-18.27	-0.14	-89.34	-0.60	-82.08	1-67	0
1	65	SC_CARRIL_1	LinMoving	Max P	0.16	-18.27	-0.14	-89.34	-0.45	-63.80	1-68	0
1	66	SC_CARRIL_1	LinMoving	Max P	0.16	-18.27	-0.14	-89.34	-0.31	-45.53	1-69	0
1	67	SC_CARRIL_1	LinMoving	Max P	0.16	-18.27	-0.14	-89.34	-0.17	-27.26	1-70	0
1	67.5	SC_CARRIL_1	LinMoving	Max P	0.16	-18.27	-0.14	-89.35	-0.09	-18.14	1-71	0
1	68.5	SC_CARRIL_1	LinMoving	Max P	0.00	0.00	0.00	0.00	0.00	0.00	1-72	0
1	0	SC_CARRIL_1	LinMoving	Min P	0.00	0.00	0.00	0.00	0.00	0.00	1-1	0
1	0.5	SC_CARRIL_1	LinMoving	Min P	-6.68	-362.95	0.29	1368.03	0.63	-12.50	1-2	0
1	1.5	SC_CARRIL_1	LinMoving	Min P	-6.68	-335.95	0.29	1300.51	0.34	336.52	1-3	0
1	2	SC_CARRIL_1	LinMoving	Min P	-6.68	-335.95	0.29	1300.50	0.20	504.24	1-4	0
1	3	SC_CARRIL_1	LinMoving	Min P	-6.68	-308.95	0.29	1233.00	-0.09	813.22	1-5	0
1	4	SC_CARRIL_1	LinMoving	Min P	-6.68	-281.95	0.29	1165.50	-0.39	1095.19	1-6	0
1	5	SC_CARRIL_1	LinMoving	Min P	-6.68	-254.95	0.29	1098.00	-0.68	1350.17	1-7	0
1	6	SC_CARRIL_1	LinMoving	Min P	-6.68	-227.95	0.29	1030.51	-0.97	1578.15	1-8	0
1	7	SC_CARRIL_1	LinMoving	Min P	-6.68	-200.95	0.29	963.01	-1.26	1779.12	1-9	0
1	8	SC_CARRIL_1	LinMoving	Min P	-6.68	-173.96	0.29	895.51	-1.55	1953.10	1-10	0
1	9	SC_CARRIL_1	LinMoving	Min P	-6.68	-146.96	0.29	828.01	-1.84	2100.08	1-11	0
1	10	SC_CARRIL_1	LinMoving	Min P	-6.68	-119.96	0.29	760.51	-2.13	2220.05	1-12	0
1	11	SC_CARRIL_1	LinMoving	Min P	-6.68	-92.96	0.29	693.02	-2.42	2313.03	1-13	0
1	12	SC_CARRIL_1	LinMoving	Min P	-6.68	-65.96	0.29	625.52	-2.71	2379.01	1-14	0
1	13	SC_CARRIL_1	LinMoving	Min P	-6.68	-38.96	0.29	558.02	-3.00	2417.98	1-15	0
1	14	SC_CARRIL_1	LinMoving	Min P	-6.68	-11.96	0.29	490.52	-3.29	2429.96	1-16	0
1	15	SC_CARRIL_1	LinMoving	Min P	-6.68	15.04	0.29	423.02	-3.58	2414.94	1-17	0
1	16	SC_CARRIL_1	LinMoving	Min P	-6.68	42.04	0.29	355.53	-3.87	2372.92	1-18	0
1	17	SC_CARRIL_1	LinMoving	Min P	-6.68	69.04	0.29	288.03	-4.16	2303.89	1-19	0
1	18	SC_CARRIL_1	LinMoving	Min P	-6.68	96.04	0.29	220.53	-4.45	2207.87	1-20	0
1	19	SC_CARRIL_1	LinMoving	Min P	-6.68	123.04	0.29	153.03	-4.74	2084.85	1-21	0
1	20	SC_CARRIL_1	LinMoving	Min P	-6.68	150.04	0.29	85.53	-5.03	1934.82	1-22	0
1	21	SC_CARRIL_1	LinMoving	Min P	-6.68	177.04	0.29	18.04	-5.32	1757.80	1-23	0
1	22	SC_CARRIL_1	LinMoving	Min P	-6.68	204.03	0.29	-49.46	-5.61	1553.78	1-24	0
1	23	SC_CARRIL_1	LinMoving	Min P	-6.68	231.03	0.29	-116.96	-5.90	1322.75	1-25	0
1	24	SC_CARRIL_1	LinMoving	Min P	-6.68	258.03	0.29	-184.46	-6.19	1064.73	1-26	0
1	25	SC_CARRIL_1	LinMoving	Min P	-6.68	285.03	0.29	-251.96	-6.48	779.71	1-27	0
1	26	SC_CARRIL_1	LinMoving	Min P	-6.68	312.03	0.29	-319.45	-6.77	467.68	1-28	0
1	27	SC_CARRIL_1	LinMoving	Min P	-6.68	339.03	0.29	-386.95	-7.06	128.66	1-29	0
1	28	SC_CARRIL_1	LinMoving	Min P	-6.68	366.03	0.29	-454.45	-7.35	-237.36	1-30	0
1	29	SC_CARRIL_1	LinMoving	Min P	-6.68	393.03	0.29	-521.95	-7.64	-630.39	1-31	0
1	30	SC_CARRIL_1	LinMoving	Min P	-6.68	420.03	0.29	-589.45	-7.93	-1050.41	1-32	0
1	31	SC_CARRIL_1	LinMoving	Min P	-6.68	447.03	0.29	-656.95	-8.22	-1491.43	1-33	0
1	32	SC_CARRIL_1	LinMoving	Min P	-6.68	487.53	0.29	-758.19	-8.51	-1971.46	1-34	0
1	33	SC_CARRIL_1	LinMoving	Min P	-6.68	514.53	0.29	-825.68	-8.80	-2471.23	1-35	0
1	33.75	SC_CARRIL_1	LinMoving	Min P	-6.68	528.02	0.29	-859.43	-9.02	-2868.24	1-36	0
1	34.5	SC_CARRIL_1	LinMoving	Min P	-6.68	-554.51	-0.29	925.65	-9.24	-3272.51	1-37	0
1	35.25	SC_CARRIL_1	LinMoving	Min P	-6.68	-528.02	-0.29	859.42	-9.02	-2868.24	1-38	0
1	36	SC_CARRIL_1	LinMoving	Min P	-6.68	-514.53	-0.29	825.69	-8.80	-2471.48	1-39	0
1	37	SC_CARRIL_1	LinMoving	Min P	-6.68	-474.03	-0.29	724.44	-8.51	-1971.45	1-40	0
1	38	SC_CARRIL_1	LinMoving	Min P	-6.68	-447.03	-0.29	656.94	-8.22	-1491.43	1-41	0
1	39	SC_CARRIL_1	LinMoving	Min P	-6.68	-420.03	-0.29	589.44	-7.93	-1050.41	1-42	0
1	40	SC_CARRIL_1	LinMoving	Min P	-6.68	-393.03	-0.29	521.94	-7.64	-630.39	1-43	0
1	41	SC_CARRIL_1	LinMoving	Min P	-6.68	-366.03	-0.29	454.45	-7.35	-237.36	1-44	0
1	42	SC_CARRIL_1	LinMoving	Min P	-6.68	-339.03	-0.29	386.95	-7.06	128.66	1-45	0

ESTRUCTURA E1. ESFUERZOS EN TABLERO PARA TODOS LOS CASOS E HIPOTESIS DE CARGA

Frame	Station	OutputCase	CaseType	StepType	P	V2	V3	T	M2	M3	FrameElem	ElemStation
Text	m	Text	Text	Text	KN	KN	KN	KN-m	KN-m	KN-m	Text	m
1	43	SC_CARRIL_1	LinMoving	Min P	-6.68	-312.03	-0.29	319.45	-6.77	467.68	1-46	0
1	44	SC_CARRIL_1	LinMoving	Min P	-6.68	-285.03	-0.29	251.95	-6.48	779.71	1-47	0
1	45	SC_CARRIL_1	LinMoving	Min P	-6.68	-258.03	-0.29	184.45	-6.19	1064.73	1-48	0
1	46	SC_CARRIL_1	LinMoving	Min P	-6.68	-231.03	-0.29	116.96	-5.90	1322.75	1-49	0
1	47	SC_CARRIL_1	LinMoving	Min P	-6.68	-204.03	-0.29	49.46	-5.61	1553.78	1-50	0
1	48	SC_CARRIL_1	LinMoving	Min P	-6.68	-177.04	-0.29	-18.04	-5.32	1757.80	1-51	0
1	49	SC_CARRIL_1	LinMoving	Min P	-6.68	-150.04	-0.29	-85.54	-5.03	1934.82	1-52	0
1	50	SC_CARRIL_1	LinMoving	Min P	-6.68	-123.04	-0.29	-153.04	-4.74	2084.85	1-53	0
1	51	SC_CARRIL_1	LinMoving	Min P	-6.68	-96.04	-0.29	-220.53	-4.45	2207.87	1-54	0
1	52	SC_CARRIL_1	LinMoving	Min P	-6.68	-69.04	-0.29	-288.03	-4.16	2303.89	1-55	0
1	53	SC_CARRIL_1	LinMoving	Min P	-6.68	-42.04	-0.29	-355.53	-3.87	2372.92	1-56	0
1	54	SC_CARRIL_1	LinMoving	Min P	-6.68	-15.04	-0.29	-423.03	-3.58	2414.94	1-57	0
1	55	SC_CARRIL_1	LinMoving	Min P	-6.68	11.96	-0.29	-490.53	-3.29	2429.96	1-58	0
1	56	SC_CARRIL_1	LinMoving	Min P	-6.68	38.96	-0.29	-558.02	-3.00	2417.99	1-59	0
1	57	SC_CARRIL_1	LinMoving	Min P	-6.68	65.96	-0.29	-625.52	-2.71	2379.01	1-60	0
1	58	SC_CARRIL_1	LinMoving	Min P	-6.68	92.96	-0.29	-693.02	-2.42	2313.03	1-61	0
1	59	SC_CARRIL_1	LinMoving	Min P	-6.68	119.96	-0.29	-760.52	-2.13	2220.06	1-62	0
1	60	SC_CARRIL_1	LinMoving	Min P	-6.68	146.96	-0.29	-828.02	-1.84	2100.08	1-63	0
1	61	SC_CARRIL_1	LinMoving	Min P	-6.68	173.96	-0.29	-895.51	-1.55	1953.10	1-64	0
1	62	SC_CARRIL_1	LinMoving	Min P	-6.68	200.96	-0.29	-963.01	-1.26	1779.12	1-65	0
1	63	SC_CARRIL_1	LinMoving	Min P	-6.68	227.95	-0.29	-1030.51	-0.97	1578.15	1-66	0
1	64	SC_CARRIL_1	LinMoving	Min P	-6.68	254.95	-0.29	-1098.01	-0.68	1350.17	1-67	0
1	65	SC_CARRIL_1	LinMoving	Min P	-6.68	281.95	-0.29	-1165.51	-0.39	1095.19	1-68	0
1	66	SC_CARRIL_1	LinMoving	Min P	-6.68	308.95	-0.29	-1233.00	-0.10	813.22	1-69	0
1	67	SC_CARRIL_1	LinMoving	Min P	-6.68	335.95	-0.29	-1300.51	0.19	504.49	1-70	0
1	67.5	SC_CARRIL_1	LinMoving	Min P	-6.68	335.95	-0.29	-1300.53	0.34	336.98	1-71	0
1	68.5	SC_CARRIL_1	LinMoving	Min P	0.00	0.00	0.00	0.00	0.00	0.00	1-72	0
1	0	SC_CARRIL_1	LinMoving	Max V2	0.00	0.00	0.00	0.00	0.00	0.00	1-1	0
1	0.5	SC_CARRIL_1	LinMoving	Max V2	-1.22	57.23	0.21	163.54	0.13	-1.05	1-2	0
1	1.5	SC_CARRIL_1	LinMoving	Max V2	-1.27	57.36	0.21	162.62	-0.07	-54.39	1-3	0
1	2	SC_CARRIL_1	LinMoving	Max V2	-1.27	57.36	0.21	162.61	-0.17	-83.52	1-4	0
1	3	SC_CARRIL_1	LinMoving	Max V2	-1.39	58.39	0.21	160.08	-0.35	-114.65	1-5	0
1	4	SC_CARRIL_1	LinMoving	Max V2	-1.54	60.45	0.21	156.04	-0.52	-122.49	1-6	0
1	5	SC_CARRIL_1	LinMoving	Max V2	-1.70	63.54	0.21	150.28	-0.70	-110.35	1-7	0
1	6	SC_CARRIL_1	LinMoving	Max V2	-1.89	67.65	0.20	142.77	-0.87	-81.39	1-8	0
1	7	SC_CARRIL_1	LinMoving	Max V2	-2.10	72.77	0.20	133.54	-1.05	-38.80	1-9	0
1	8	SC_CARRIL_1	LinMoving	Max V2	-2.31	78.92	0.20	122.56	-1.24	14.29	1-10	0
1	9	SC_CARRIL_1	LinMoving	Max V2	-2.54	86.06	0.21	109.86	-1.43	74.78	1-11	0
1	10	SC_CARRIL_1	LinMoving	Max V2	-2.77	94.20	0.21	95.41	-1.63	139.61	1-12	0
1	11	SC_CARRIL_1	LinMoving	Max V2	-3.01	103.33	0.21	79.23	-1.84	205.76	1-13	0
1	12	SC_CARRIL_1	LinMoving	Max V2	-3.26	113.44	0.21	61.31	-2.06	270.27	1-14	0
1	13	SC_CARRIL_1	LinMoving	Max V2	-3.50	124.51	0.22	41.64	-2.30	330.24	1-15	0
1	14	SC_CARRIL_1	LinMoving	Max V2	-3.74	136.53	0.22	20.24	-2.55	382.83	1-16	0
1	15	SC_CARRIL_1	LinMoving	Max V2	-3.98	149.49	0.23	-2.91	-2.82	425.30	1-17	0
1	16	SC_CARRIL_1	LinMoving	Max V2	-4.21	163.37	0.23	-27.80	-3.11	454.94	1-18	0
1	17	SC_CARRIL_1	LinMoving	Max V2	-4.44	178.16	0.24	-54.43	-3.42	469.19	1-19	0
1	18	SC_CARRIL_1	LinMoving	Max V2	-4.66	193.83	0.24	-82.82	-3.76	465.53	1-20	0
1	19	SC_CARRIL_1	LinMoving	Max V2	-4.87	210.38	0.25	-112.95	-4.11	441.57	1-21	0
1	20	SC_CARRIL_1	LinMoving	Max V2	-5.07	227.77	0.26	-144.83	-4.50	395.02	1-22	0
1	21	SC_CARRIL_1	LinMoving	Max V2	-5.26	245.99	0.27	-178.46	-4.92	323.68	1-23	0
1	22	SC_CARRIL_1	LinMoving	Max V2	-5.43	265.01	0.28	-213.84	-5.36	225.50	1-24	0
1	23	SC_CARRIL_1	LinMoving	Max V2	-5.59	284.82	0.29	-250.98	-5.84	98.53	1-25	0
1	24	SC_CARRIL_1	LinMoving	Max V2	-5.74	305.38	0.30	-289.87	-6.35	-59.06	1-26	0
1	25	SC_CARRIL_1	LinMoving	Max V2	-5.87	326.68	0.31	-330.51	-6.89	-248.93	1-27	0
1	26	SC_CARRIL_1	LinMoving	Max V2	-5.99	348.68	0.32	-372.92	-7.48	-472.63	1-28	0
1	27	SC_CARRIL_1	LinMoving	Max V2	-6.10	371.36	0.33	-417.07	-8.10	-731.58	1-29	0
1	28	SC_CARRIL_1	LinMoving	Max V2	-6.19	394.68	0.34	-462.99	-8.76	-1027.01	1-30	0
1	29	SC_CARRIL_1	LinMoving	Max V2	-6.27	418.63	0.35	-510.66	-9.47	-1360.03	1-31	0
1	30	SC_CARRIL_1	LinMoving	Max V2	-6.33	443.16	0.37	-560.08	-10.22	-1731.58	1-32	0
1	31	SC_CARRIL_1	LinMoving	Max V2	-6.38	468.25	0.38	-611.26	-11.01	-2141.43	1-33	0
1	32	SC_CARRIL_1	LinMoving	Max V2	-6.42	507.33	0.40	-697.44	-11.87	-2591.74	1-34	0
1	33	SC_CARRIL_1	LinMoving	Max V2	-6.44	533.45	0.41	-752.35	-12.75	-3083.59	1-35	0
1	33.75	SC_CARRIL_1	LinMoving	Max V2	-6.45	546.51	0.43	-775.20	-13.57	-3472.27	1-36	0
1	34.5	SC_CARRIL_1	LinMoving	Max V2	-0.07	0.15	0.00	0.63	0.11	1.50	1-37	0
1	35.25	SC_CARRIL_1	LinMoving	Max V2	-0.07	0.21	-0.01	-5.11	-0.19	3.57	1-38	0
1	36	SC_CARRIL_1	LinMoving	Max V2	-0.08	0.65	-0.02	-16.01	-0.68	17.61	1-39	0
1	37	SC_CARRIL_1	LinMoving	Max V2	-0.11	1.56	-0.04	-29.09	-1.15	46.29	1-40	0
1	38	SC_CARRIL_1	LinMoving	Max V2	-0.14	2.95	-0.05	-43.65	-1.56	87.81	1-41	0
1	39	SC_CARRIL_1	LinMoving	Max V2	-0.19	4.86	-0.07	-59.97	-1.92	142.25	1-42	0
1	40	SC_CARRIL_1	LinMoving	Max V2	-0.26	7.32	-0.08	-78.04	-2.23	208.99	1-43	0
1	41	SC_CARRIL_1	LinMoving	Max V2	-0.33	10.38	-0.09	-97.87	-2.50	287.27	1-44	0
1	42	SC_CARRIL_1	LinMoving	Max V2	-0.43	14.05	-0.11	-119.46	-2.73	376.14	1-45	0
1	43	SC_CARRIL_1	LinMoving	Max V2	-0.53	18.37	-0.12	-142.80	-2.92	474.49	1-46	0
1	44	SC_CARRIL_1	LinMoving	Max V2	-0.65	23.37	-0.13	-167.90	-3.07	581.08	1-47	0
1	45	SC_CARRIL_1	LinMoving	Max V2	-0.79	29.08	-0.14	-194.75	-3.18	694.51	1-48	0
1	46	SC_CARRIL_1	LinMoving	Max V2	-0.93	35.51	-0.15	-223.36	-3.25	813.22	1-49	0
1	47	SC_CARRIL_1	LinMoving	Max V2	-1.10	42.71	-0.16	-253.72	-3.30	935.54	1-50	0
1	48	SC_CARRIL_1	LinMoving	Max V2	-1.27	50.68	-0.17	-285.83	-3.31	1059.66	1-51	0
1	49	SC_CARRIL_1	LinMoving	Max V2	-1.46	59.46	-0.18	-319.70	-3.29	1183.62	1-52	0
1	50	SC_CARRIL_1	LinMoving	Max V2	-1.66	69.07	-0.18	-355.32	-3.24	1305.36	1-53	0
1	51	SC_CARRIL_1	LinMoving	Max V2	-1.87	79.52	-0.19	-392.68	-3.16	1422.70	1-54	0

ESTRUCTURA E1. ESFUERZOS EN TABLERO PARA TODOS LOS CASOS E HIPOTESIS DE CARGA

Frame	Station	OutputCase	CaseType	StepType	P	V2	V3	T	M2	M3	FrameElem	ElemStation
Text	m	Text	Text	Text	KN	KN	KN	KN-m	KN-m	KN-m	Text	m
1	52	SC_CARRIL_1	LinMoving	Max V2	-2.08	90.85	-0.20	-431.80	-3.06	1533.34	1-55	0
1	53	SC_CARRIL_1	LinMoving	Max V2	-2.31	103.06	-0.20	-472.66	-2.94	1634.88	1-56	0
1	54	SC_CARRIL_1	LinMoving	Max V2	-2.55	116.18	-0.21	-515.27	-2.80	1724.83	1-57	0
1	55	SC_CARRIL_1	LinMoving	Max V2	-2.78	130.22	-0.21	-559.62	-2.63	1800.59	1-58	0
1	56	SC_CARRIL_1	LinMoving	Max V2	-3.03	145.19	-0.22	-605.72	-2.45	1859.48	1-59	0
1	57	SC_CARRIL_1	LinMoving	Max V2	-3.27	161.12	-0.22	-653.55	-2.25	1898.74	1-60	0
1	58	SC_CARRIL_1	LinMoving	Max V2	-3.51	178.02	-0.23	-703.13	-2.04	1915.55	1-61	0
1	59	SC_CARRIL_1	LinMoving	Max V2	-3.75	195.89	-0.23	-754.44	-1.82	1906.99	1-62	0
1	60	SC_CARRIL_1	LinMoving	Max V2	-3.99	214.74	-0.23	-807.50	-1.58	1870.12	1-63	0
1	61	SC_CARRIL_1	LinMoving	Max V2	-4.21	234.60	-0.23	-862.29	-1.34	1801.91	1-64	0
1	62	SC_CARRIL_1	LinMoving	Max V2	-4.43	255.46	-0.23	-918.81	-1.09	1699.30	1-65	0
1	63	SC_CARRIL_1	LinMoving	Max V2	-4.63	277.33	-0.23	-977.07	-0.83	1559.19	1-66	0
1	64	SC_CARRIL_1	LinMoving	Max V2	-4.82	300.22	-0.23	-1037.07	-0.58	1378.44	1-67	0
1	65	SC_CARRIL_1	LinMoving	Max V2	-4.99	324.13	-0.23	-1098.80	-0.32	1153.88	1-68	0
1	66	SC_CARRIL_1	LinMoving	Max V2	-5.14	349.07	-0.23	-1162.26	-0.06	882.34	1-69	0
1	67	SC_CARRIL_1	LinMoving	Max V2	-5.26	375.03	-0.22	-1227.24	0.20	560.80	1-70	0
1	67.5	SC_CARRIL_1	LinMoving	Max V2	-5.26	375.03	-0.22	-1227.26	0.31	373.65	1-71	0
1	68.5	SC_CARRIL_1	LinMoving	Max V2	0.00	0.00	0.00	0.00	0.00	0.00	1-72	0
1	0	SC_CARRIL_1	LinMoving	Min V2	0.00	0.00	0.00	0.00	0.00	0.00	1-1	0
1	0.5	SC_CARRIL_1	LinMoving	Min V2	-5.31	-401.90	0.22	1293.84	0.55	-11.31	1-2	0
1	1.5	SC_CARRIL_1	LinMoving	Min V2	-5.26	-375.03	0.22	1227.24	0.31	373.28	1-3	0
1	2	SC_CARRIL_1	LinMoving	Min V2	-5.26	-375.03	0.22	1227.23	0.20	560.60	1-4	0
1	3	SC_CARRIL_1	LinMoving	Min V2	-5.14	-349.07	0.23	1162.26	-0.06	882.34	1-5	0
1	4	SC_CARRIL_1	LinMoving	Min V2	-4.99	-324.13	0.23	1098.80	-0.32	1153.88	1-6	0
1	5	SC_CARRIL_1	LinMoving	Min V2	-4.82	-300.22	0.23	1037.07	-0.58	1378.44	1-7	0
1	6	SC_CARRIL_1	LinMoving	Min V2	-4.63	-277.33	0.23	977.07	-0.83	1559.19	1-8	0
1	7	SC_CARRIL_1	LinMoving	Min V2	-4.43	-255.46	0.23	918.81	-1.09	1699.30	1-9	0
1	8	SC_CARRIL_1	LinMoving	Min V2	-4.21	-234.60	0.23	862.28	-1.34	1801.91	1-10	0
1	9	SC_CARRIL_1	LinMoving	Min V2	-3.99	-214.74	0.23	807.49	-1.58	1870.12	1-11	0
1	10	SC_CARRIL_1	LinMoving	Min V2	-3.75	-195.89	0.23	754.44	-1.82	1906.99	1-12	0
1	11	SC_CARRIL_1	LinMoving	Min V2	-3.51	-178.02	0.23	703.13	-2.04	1915.55	1-13	0
1	12	SC_CARRIL_1	LinMoving	Min V2	-3.27	-161.12	0.22	653.55	-2.25	1898.74	1-14	0
1	13	SC_CARRIL_1	LinMoving	Min V2	-3.03	-145.19	0.22	605.71	-2.45	1859.48	1-15	0
1	14	SC_CARRIL_1	LinMoving	Min V2	-2.78	-130.22	0.21	559.62	-2.63	1800.59	1-16	0
1	15	SC_CARRIL_1	LinMoving	Min V2	-2.55	-116.18	0.21	515.27	-2.80	1724.83	1-17	0
1	16	SC_CARRIL_1	LinMoving	Min V2	-2.31	-103.06	0.20	472.66	-2.94	1634.88	1-18	0
1	17	SC_CARRIL_1	LinMoving	Min V2	-2.08	-90.85	0.20	431.80	-3.06	1533.34	1-19	0
1	18	SC_CARRIL_1	LinMoving	Min V2	-1.87	-79.52	0.19	392.68	-3.16	1422.70	1-20	0
1	19	SC_CARRIL_1	LinMoving	Min V2	-1.66	-69.07	0.18	355.32	-3.24	1305.36	1-21	0
1	20	SC_CARRIL_1	LinMoving	Min V2	-1.46	-59.46	0.18	319.70	-3.29	1183.62	1-22	0
1	21	SC_CARRIL_1	LinMoving	Min V2	-1.27	-50.68	0.17	285.83	-3.31	1059.66	1-23	0
1	22	SC_CARRIL_1	LinMoving	Min V2	-1.10	-42.71	0.16	253.72	-3.30	935.54	1-24	0
1	23	SC_CARRIL_1	LinMoving	Min V2	-0.93	-35.51	0.15	223.36	-3.25	813.22	1-25	0
1	24	SC_CARRIL_1	LinMoving	Min V2	-0.79	-29.08	0.14	194.75	-3.18	694.51	1-26	0
1	25	SC_CARRIL_1	LinMoving	Min V2	-0.65	-23.37	0.13	167.90	-3.07	581.08	1-27	0
1	26	SC_CARRIL_1	LinMoving	Min V2	-0.53	-18.37	0.12	142.80	-2.92	474.49	1-28	0
1	27	SC_CARRIL_1	LinMoving	Min V2	-0.43	-14.05	0.11	119.46	-2.73	376.14	1-29	0
1	28	SC_CARRIL_1	LinMoving	Min V2	-0.33	-10.38	0.09	97.87	-2.50	287.27	1-30	0
1	29	SC_CARRIL_1	LinMoving	Min V2	-0.26	-7.32	0.08	78.04	-2.23	208.99	1-31	0
1	30	SC_CARRIL_1	LinMoving	Min V2	-0.19	-4.86	0.07	59.97	-1.92	142.24	1-32	0
1	31	SC_CARRIL_1	LinMoving	Min V2	-0.14	-2.95	0.05	43.65	-1.56	87.30	1-33	0
1	32	SC_CARRIL_1	LinMoving	Min V2	-0.11	-1.53	0.04	28.58	-1.13	44.82	1-34	0
1	33	SC_CARRIL_1	LinMoving	Min V2	-0.08	-0.65	0.02	16.01	-0.68	17.61	1-35	0
1	33.75	SC_CARRIL_1	LinMoving	Min V2	-0.07	-0.21	0.01	5.11	-0.19	3.57	1-36	0
1	34.5	SC_CARRIL_1	LinMoving	Min V2	-6.46	-573.44	-0.44	836.95	-14.20	-390.43	1-37	0
1	35.25	SC_CARRIL_1	LinMoving	Min V2	-6.45	-546.51	-0.43	775.19	-13.57	-347.27	1-38	0
1	36	SC_CARRIL_1	LinMoving	Min V2	-6.44	-533.45	-0.41	752.36	-12.75	-308.83	1-39	0
1	37	SC_CARRIL_1	LinMoving	Min V2	-6.42	-493.86	-0.40	664.19	-11.85	-259.21	1-40	0
1	38	SC_CARRIL_1	LinMoving	Min V2	-6.38	-468.25	-0.38	611.26	-11.01	-214.43	1-41	0
1	39	SC_CARRIL_1	LinMoving	Min V2	-6.33	-443.16	-0.37	560.08	-10.22	-173.58	1-42	0
1	40	SC_CARRIL_1	LinMoving	Min V2	-6.27	-418.63	-0.35	510.65	-9.47	-136.03	1-43	0
1	41	SC_CARRIL_1	LinMoving	Min V2	-6.19	-394.68	-0.34	462.98	-8.76	-102.01	1-44	0
1	42	SC_CARRIL_1	LinMoving	Min V2	-6.10	-371.36	-0.33	417.07	-8.10	-73.58	1-45	0
1	43	SC_CARRIL_1	LinMoving	Min V2	-5.99	-348.68	-0.32	372.91	-7.48	-47.63	1-46	0
1	44	SC_CARRIL_1	LinMoving	Min V2	-5.87	-326.68	-0.31	330.51	-6.90	-24.93	1-47	0
1	45	SC_CARRIL_1	LinMoving	Min V2	-5.74	-305.38	-0.30	289.86	-6.35	-5.06	1-48	0
1	46	SC_CARRIL_1	LinMoving	Min V2	-5.59	-284.82	-0.29	250.97	-5.84	9.53	1-49	0
1	47	SC_CARRIL_1	LinMoving	Min V2	-5.43	-265.01	-0.28	213.84	-5.36	22.50	1-50	0
1	48	SC_CARRIL_1	LinMoving	Min V2	-5.26	-245.99	-0.27	178.45	-4.92	32.68	1-51	0
1	49	SC_CARRIL_1	LinMoving	Min V2	-5.07	-227.77	-0.26	144.82	-4.50	39.02	1-52	0
1	50	SC_CARRIL_1	LinMoving	Min V2	-4.87	-210.38	-0.25	112.94	-4.12	44.57	1-53	0
1	51	SC_CARRIL_1	LinMoving	Min V2	-4.66	-193.83	-0.24	82.81	-3.76	46.53	1-54	0
1	52	SC_CARRIL_1	LinMoving	Min V2	-4.44	-178.16	-0.24	54.43	-3.42	46.19	1-55	0
1	53	SC_CARRIL_1	LinMoving	Min V2	-4.21	-163.37	-0.23	27.79	-3.11	45.94	1-56	0
1	54	SC_CARRIL_1	LinMoving	Min V2	-3.98	-149.49	-0.23	2.90	-2.82	42.30	1-57	0
1	55	SC_CARRIL_1	LinMoving	Min V2	-3.74	-136.53	-0.22	-20.24	-2.55	38.23	1-58	0
1	56	SC_CARRIL_1	LinMoving	Min V2	-3.50	-124.51	-0.22	-41.65	-2.30	33.24	1-59	0
1	57	SC_CARRIL_1	LinMoving	Min V2	-3.26	-113.44	-0.21	-61.31	-2.06	27.27	1-60	0
1	58	SC_CARRIL_1	LinMoving	Min V2	-3.01	-103.33	-0.21	-79.23	-1.84	20.76	1-61	0
1	59	SC_CARRIL_1	LinMoving	Min V2	-2.77	-94.20	-0.21	-95.41	-1.63	13.61	1-62	0
1	60	SC_CARRIL_1	LinMoving	Min V2	-2.54	-86.06	-0.21	-109.86	-1.43	7.78	1-63	0

ESTRUCTURA E1. ESFUERZOS EN TABLERO PARA TODOS LOS CASOS E HIPOTESIS DE CARGA

Frame	Station	OutputCase	CaseType	StepType	P	V2	V3	T	M2	M3	FrameElem	ElemStation
Text	m	Text	Text	Text	KN	KN	KN	KN-m	KN-m	KN-m	Text	m
1	61	SC_CARRIL_1	LinMoving	Min V2	-2.31	-78.92	-0.20	-122.57	-1.24	14.29	1-64	0
1	62	SC_CARRIL_1	LinMoving	Min V2	-2.10	-72.78	-0.20	-133.54	-1.05	-38.80	1-65	0
1	63	SC_CARRIL_1	LinMoving	Min V2	-1.89	-67.65	-0.20	-142.77	-0.87	-81.39	1-66	0
1	64	SC_CARRIL_1	LinMoving	Min V2	-1.70	-63.54	-0.21	-150.28	-0.70	-110.35	1-67	0
1	65	SC_CARRIL_1	LinMoving	Min V2	-1.54	-60.45	-0.21	-156.05	-0.52	-122.49	1-68	0
1	66	SC_CARRIL_1	LinMoving	Min V2	-1.39	-58.39	-0.21	-160.08	-0.35	-114.65	1-69	0
1	67	SC_CARRIL_1	LinMoving	Min V2	-1.27	-57.36	-0.21	-162.62	-0.17	-83.57	1-70	0
1	67.5	SC_CARRIL_1	LinMoving	Min V2	-1.27	-57.36	-0.21	-162.63	-0.07	-54.30	1-71	0
1	68.5	SC_CARRIL_1	LinMoving	Min V2	0.00	-13.50	0.00	33.75	0.00	-6.74	1-72	0
1	0	SC_CARRIL_1	LinMoving	Max V3	0.00	0.00	0.00	0.00	0.00	0.00	1-1	0
1	0.5	SC_CARRIL_1	LinMoving	Max V3	-5.14	-217.96	0.46	1117.71	0.51	-4.43	1-2	0
1	1.5	SC_CARRIL_1	LinMoving	Max V3	-5.14	-217.96	0.46	1117.68	0.06	213.17	1-3	0
1	2	SC_CARRIL_1	LinMoving	Max V3	-5.14	-217.96	0.46	1117.66	-0.17	321.96	1-4	0
1	3	SC_CARRIL_1	LinMoving	Max V3	-5.14	-217.96	0.46	1117.66	-0.63	539.92	1-5	0
1	4	SC_CARRIL_1	LinMoving	Max V3	-5.14	-217.96	0.46	1117.66	-1.09	757.87	1-6	0
1	5	SC_CARRIL_1	LinMoving	Max V3	-5.14	-217.96	0.46	1117.66	-1.54	975.83	1-7	0
1	6	SC_CARRIL_1	LinMoving	Max V3	-5.14	-217.70	0.46	1117.02	-2.00	1193.53	1-8	0
1	7	SC_CARRIL_1	LinMoving	Max V3	-5.14	-200.75	0.46	1074.63	-2.46	1394.29	1-9	0
1	8	SC_CARRIL_1	LinMoving	Max V3	-5.14	-173.75	0.46	1007.14	-2.91	1568.06	1-10	0
1	9	SC_CARRIL_1	LinMoving	Max V3	-5.14	-146.75	0.46	939.64	-3.37	1714.83	1-11	0
1	10	SC_CARRIL_1	LinMoving	Max V3	-5.14	-119.75	0.46	872.14	-3.83	1834.59	1-12	0
1	11	SC_CARRIL_1	LinMoving	Max V3	-5.14	-92.75	0.46	804.64	-4.28	1927.36	1-13	0
1	12	SC_CARRIL_1	LinMoving	Max V3	-5.14	-65.75	0.46	737.14	-4.74	1993.13	1-14	0
1	13	SC_CARRIL_1	LinMoving	Max V3	-5.14	-38.75	0.46	669.65	-5.20	2031.90	1-15	0
1	14	SC_CARRIL_1	LinMoving	Max V3	-5.14	-11.75	0.46	602.15	-5.65	2043.67	1-16	0
1	15	SC_CARRIL_1	LinMoving	Max V3	-5.14	15.25	0.46	534.65	-6.11	2028.44	1-17	0
1	16	SC_CARRIL_1	LinMoving	Max V3	-5.14	42.25	0.46	467.15	-6.57	1986.20	1-18	0
1	17	SC_CARRIL_1	LinMoving	Max V3	-5.14	69.25	0.46	399.65	-7.02	1916.97	1-19	0
1	18	SC_CARRIL_1	LinMoving	Max V3	-5.14	96.25	0.46	332.16	-7.48	1820.74	1-20	0
1	19	SC_CARRIL_1	LinMoving	Max V3	-5.14	123.25	0.46	264.66	-7.94	1697.51	1-21	0
1	20	SC_CARRIL_1	LinMoving	Max V3	-5.14	150.24	0.46	197.16	-8.40	1547.28	1-22	0
1	21	SC_CARRIL_1	LinMoving	Max V3	-5.14	177.24	0.46	129.66	-8.85	1370.05	1-23	0
1	22	SC_CARRIL_1	LinMoving	Max V3	-5.14	204.24	0.46	62.16	-9.31	1165.81	1-24	0
1	23	SC_CARRIL_1	LinMoving	Max V3	-5.14	231.24	0.46	-5.33	-9.77	934.58	1-25	0
1	24	SC_CARRIL_1	LinMoving	Max V3	-5.14	258.24	0.46	-72.83	-10.22	676.35	1-26	0
1	25	SC_CARRIL_1	LinMoving	Max V3	-5.14	285.24	0.46	-140.33	-10.68	391.12	1-27	0
1	26	SC_CARRIL_1	LinMoving	Max V3	-5.14	312.24	0.46	-207.83	-11.14	78.89	1-28	0
1	27	SC_CARRIL_1	LinMoving	Max V3	-5.14	339.24	0.46	-275.33	-11.59	-260.34	1-29	0
1	28	SC_CARRIL_1	LinMoving	Max V3	-5.14	366.24	0.46	-342.82	-12.05	-626.58	1-30	0
1	29	SC_CARRIL_1	LinMoving	Max V3	-5.14	393.24	0.46	-410.32	-12.51	-1019.81	1-31	0
1	30	SC_CARRIL_1	LinMoving	Max V3	-5.14	420.24	0.46	-477.82	-12.96	-1440.04	1-32	0
1	31	SC_CARRIL_1	LinMoving	Max V3	-5.14	447.24	0.46	-545.32	-13.42	-1887.27	1-33	0
1	32	SC_CARRIL_1	LinMoving	Max V3	-5.14	487.73	0.46	-646.57	-13.88	-2361.50	1-34	0
1	33	SC_CARRIL_1	LinMoving	Max V3	-5.14	514.73	0.46	-714.05	-14.33	-2861.54	1-35	0
1	33.75	SC_CARRIL_1	LinMoving	Max V3	-5.14	528.23	0.46	-747.80	-14.68	-3258.71	1-36	0
1	34.5	SC_CARRIL_1	LinMoving	Max V3	-1.39	-18.16	0.02	22.54	0.93	-230.56	1-37	0
1	35.25	SC_CARRIL_1	LinMoving	Max V3	-1.39	-18.16	0.02	22.54	0.92	-216.93	1-38	0
1	36	SC_CARRIL_1	LinMoving	Max V3	-1.39	-18.16	0.02	22.54	0.90	-203.37	1-39	0
1	37	SC_CARRIL_1	LinMoving	Max V3	-1.39	-18.16	0.02	22.54	0.88	-185.21	1-40	0
1	38	SC_CARRIL_1	LinMoving	Max V3	-1.39	-18.16	0.02	22.54	0.85	-167.04	1-41	0
1	39	SC_CARRIL_1	LinMoving	Max V3	-1.39	-18.16	0.02	22.54	0.83	-148.88	1-42	0
1	40	SC_CARRIL_1	LinMoving	Max V3	-1.39	-18.16	0.02	22.54	0.81	-130.72	1-43	0
1	41	SC_CARRIL_1	LinMoving	Max V3	-1.39	-18.16	0.02	22.54	0.79	-112.56	1-44	0
1	42	SC_CARRIL_1	LinMoving	Max V3	-1.39	-18.16	0.02	22.54	0.76	-94.40	1-45	0
1	43	SC_CARRIL_1	LinMoving	Max V3	-1.39	-18.16	0.02	22.54	0.74	-76.24	1-46	0
1	44	SC_CARRIL_1	LinMoving	Max V3	-1.39	-18.16	0.02	22.54	0.72	-58.08	1-47	0
1	45	SC_CARRIL_1	LinMoving	Max V3	-1.39	-18.16	0.02	22.54	0.70	-39.92	1-48	0
1	46	SC_CARRIL_1	LinMoving	Max V3	-1.39	-18.16	0.02	22.54	0.67	-21.75	1-49	0
1	47	SC_CARRIL_1	LinMoving	Max V3	-1.39	-18.16	0.02	22.54	0.65	-3.59	1-50	0
1	48	SC_CARRIL_1	LinMoving	Max V3	-1.39	-18.16	0.02	22.54	0.63	14.57	1-51	0
1	49	SC_CARRIL_1	LinMoving	Max V3	-1.39	-18.16	0.02	22.54	0.61	32.73	1-52	0
1	50	SC_CARRIL_1	LinMoving	Max V3	-1.39	-18.16	0.02	22.54	0.58	50.89	1-53	0
1	51	SC_CARRIL_1	LinMoving	Max V3	-1.39	-18.16	0.02	22.54	0.56	69.05	1-54	0
1	52	SC_CARRIL_1	LinMoving	Max V3	-1.39	-18.16	0.02	22.54	0.54	87.21	1-55	0
1	53	SC_CARRIL_1	LinMoving	Max V3	-1.39	-18.16	0.02	22.54	0.52	105.37	1-56	0
1	54	SC_CARRIL_1	LinMoving	Max V3	-1.39	-18.16	0.02	22.54	0.49	123.54	1-57	0
1	55	SC_CARRIL_1	LinMoving	Max V3	-1.39	-18.16	0.02	22.54	0.47	141.70	1-58	0
1	56	SC_CARRIL_1	LinMoving	Max V3	-1.39	-18.16	0.02	22.54	0.45	159.86	1-59	0
1	57	SC_CARRIL_1	LinMoving	Max V3	-1.39	-18.16	0.02	22.54	0.43	178.02	1-60	0
1	58	SC_CARRIL_1	LinMoving	Max V3	-1.39	-18.16	0.02	22.54	0.40	196.18	1-61	0
1	59	SC_CARRIL_1	LinMoving	Max V3	-1.39	-18.16	0.02	22.54	0.38	214.34	1-62	0
1	60	SC_CARRIL_1	LinMoving	Max V3	-1.39	-18.16	0.02	22.54	0.36	232.50	1-63	0
1	61	SC_CARRIL_1	LinMoving	Max V3	-1.39	-18.16	0.02	22.54	0.34	250.66	1-64	0
1	62	SC_CARRIL_1	LinMoving	Max V3	-1.39	-18.16	0.02	22.54	0.31	268.83	1-65	0
1	63	SC_CARRIL_1	LinMoving	Max V3	-1.39	-7.59	0.02	-3.89	0.29	286.98	1-66	0
1	64	SC_CARRIL_1	LinMoving	Max V3	-1.39	19.23	0.02	-70.94	0.27	294.55	1-67	0
1	65	SC_CARRIL_1	LinMoving	Max V3	-1.39	46.23	0.02	-138.44	0.25	275.29	1-68	0
1	66	SC_CARRIL_1	LinMoving	Max V3	-1.39	73.23	0.02	-205.94	0.22	229.04	1-69	0
1	67	SC_CARRIL_1	LinMoving	Max V3	-1.39	100.23	0.02	-273.43	0.20	155.84	1-70	0
1	67.5	SC_CARRIL_1	LinMoving	Max V3	-1.39	100.23	0.02	-273.43	0.19	105.82	1-71	0
1	68.5	SC_CARRIL_1	LinMoving	Max V3	0.00	0.00	0.00	0.00	0.00	0.00	1-72	0

ESTRUCTURA E1. ESFUERZOS EN TABLERO PARA TODOS LOS CASOS E HIPOTESIS DE CARGA

Frame	Station	OutputCase	CaseType	StepType	P	V2	V3	T	M2	M3	FrameElem	ElemStation
Text	m	Text	Text	Text	KN	KN	KN	KN-m	KN-m	KN-m	Text	m
1	0	SC_CARRIL_1	LinMoving	Min V3	0.00	0.00	0.00	0.00	0.00	0.00	1-1	0
1	0.5	SC_CARRIL_1	LinMoving	Min V3	-1.39	-126.72	-0.02	339.67	0.17	-7.93	1-2	0
1	1.5	SC_CARRIL_1	LinMoving	Min V3	-1.39	-99.72	-0.02	272.17	0.19	105.22	1-3	0
1	2	SC_CARRIL_1	LinMoving	Min V3	-1.39	-99.72	-0.02	272.18	0.20	155.02	1-4	0
1	3	SC_CARRIL_1	LinMoving	Min V3	-1.39	-72.72	-0.02	204.68	0.22	227.77	1-5	0
1	4	SC_CARRIL_1	LinMoving	Min V3	-1.39	-45.72	-0.02	137.18	0.25	273.52	1-6	0
1	5	SC_CARRIL_1	LinMoving	Min V3	-1.39	-18.72	-0.02	69.68	0.27	292.26	1-7	0
1	6	SC_CARRIL_1	LinMoving	Min V3	-1.39	8.02	-0.02	2.82	0.29	284.27	1-8	0
1	7	SC_CARRIL_1	LinMoving	Min V3	-1.39	18.07	-0.02	-22.29	0.31	266.21	1-9	0
1	8	SC_CARRIL_1	LinMoving	Min V3	-1.39	18.07	-0.02	-22.29	0.34	248.14	1-10	0
1	9	SC_CARRIL_1	LinMoving	Min V3	-1.39	18.07	-0.02	-22.29	0.36	230.08	1-11	0
1	10	SC_CARRIL_1	LinMoving	Min V3	-1.39	18.07	-0.02	-22.29	0.38	212.01	1-12	0
1	11	SC_CARRIL_1	LinMoving	Min V3	-1.39	18.07	-0.02	-22.29	0.40	193.95	1-13	0
1	12	SC_CARRIL_1	LinMoving	Min V3	-1.39	18.07	-0.02	-22.29	0.43	175.88	1-14	0
1	13	SC_CARRIL_1	LinMoving	Min V3	-1.39	18.07	-0.02	-22.29	0.45	157.82	1-15	0
1	14	SC_CARRIL_1	LinMoving	Min V3	-1.39	18.07	-0.02	-22.29	0.47	139.75	1-16	0
1	15	SC_CARRIL_1	LinMoving	Min V3	-1.39	18.07	-0.02	-22.29	0.49	121.69	1-17	0
1	16	SC_CARRIL_1	LinMoving	Min V3	-1.39	18.07	-0.02	-22.29	0.52	103.62	1-18	0
1	17	SC_CARRIL_1	LinMoving	Min V3	-1.39	18.07	-0.02	-22.29	0.54	85.56	1-19	0
1	18	SC_CARRIL_1	LinMoving	Min V3	-1.39	18.07	-0.02	-22.29	0.56	67.49	1-20	0
1	19	SC_CARRIL_1	LinMoving	Min V3	-1.39	18.07	-0.02	-22.29	0.58	49.43	1-21	0
1	20	SC_CARRIL_1	LinMoving	Min V3	-1.39	18.07	-0.02	-22.29	0.61	31.36	1-22	0
1	21	SC_CARRIL_1	LinMoving	Min V3	-1.39	18.07	-0.02	-22.29	0.63	13.30	1-23	0
1	22	SC_CARRIL_1	LinMoving	Min V3	-1.39	18.07	-0.02	-22.29	0.65	-4.77	1-24	0
1	23	SC_CARRIL_1	LinMoving	Min V3	-1.39	18.07	-0.02	-22.29	0.67	-22.84	1-25	0
1	24	SC_CARRIL_1	LinMoving	Min V3	-1.39	18.07	-0.02	-22.29	0.70	-40.90	1-26	0
1	25	SC_CARRIL_1	LinMoving	Min V3	-1.39	18.07	-0.02	-22.29	0.72	-58.97	1-27	0
1	26	SC_CARRIL_1	LinMoving	Min V3	-1.39	18.07	-0.02	-22.29	0.74	-77.03	1-28	0
1	27	SC_CARRIL_1	LinMoving	Min V3	-1.39	18.07	-0.02	-22.29	0.76	-95.10	1-29	0
1	28	SC_CARRIL_1	LinMoving	Min V3	-1.39	18.07	-0.02	-22.29	0.79	-113.16	1-30	0
1	29	SC_CARRIL_1	LinMoving	Min V3	-1.39	18.07	-0.02	-22.29	0.81	-131.23	1-31	0
1	30	SC_CARRIL_1	LinMoving	Min V3	-1.39	18.07	-0.02	-22.29	0.83	-149.29	1-32	0
1	31	SC_CARRIL_1	LinMoving	Min V3	-1.39	18.07	-0.02	-22.29	0.85	-167.36	1-33	0
1	32	SC_CARRIL_1	LinMoving	Min V3	-1.39	18.07	-0.02	-22.29	0.88	-185.42	1-34	0
1	33	SC_CARRIL_1	LinMoving	Min V3	-1.39	18.07	-0.02	-22.29	0.90	-203.44	1-35	0
1	33.75	SC_CARRIL_1	LinMoving	Min V3	-1.39	18.07	-0.02	-22.29	0.92	-216.99	1-36	0
1	34.5	SC_CARRIL_1	LinMoving	Min V3	-5.13	-555.14	-0.46	815.04	-15.02	-366.37	1-37	0
1	35.25	SC_CARRIL_1	LinMoving	Min V3	-5.13	-528.14	-0.46	747.54	-14.68	-325.76	1-38	0
1	36	SC_CARRIL_1	LinMoving	Min V3	-5.13	-514.64	-0.46	713.81	-14.33	-286.86	1-39	0
1	37	SC_CARRIL_1	LinMoving	Min V3	-5.13	-474.14	-0.46	612.56	-13.88	-236.72	1-40	0
1	38	SC_CARRIL_1	LinMoving	Min V3	-5.13	-447.14	-0.46	545.06	-13.42	-188.58	1-41	0
1	39	SC_CARRIL_1	LinMoving	Min V3	-5.13	-420.14	-0.46	477.57	-12.96	-144.45	1-42	0
1	40	SC_CARRIL_1	LinMoving	Min V3	-5.13	-393.14	-0.46	410.07	-12.51	-102.31	1-43	0
1	41	SC_CARRIL_1	LinMoving	Min V3	-5.13	-366.14	-0.46	342.57	-12.05	-62.18	1-44	0
1	42	SC_CARRIL_1	LinMoving	Min V3	-5.13	-339.14	-0.46	275.07	-11.59	-26.04	1-45	0
1	43	SC_CARRIL_1	LinMoving	Min V3	-5.13	-312.14	-0.46	207.57	-11.14	78.09	1-46	0
1	44	SC_CARRIL_1	LinMoving	Min V3	-5.13	-285.14	-0.46	140.08	-10.68	390.23	1-47	0
1	45	SC_CARRIL_1	LinMoving	Min V3	-5.13	-258.15	-0.46	72.58	-10.22	675.37	1-48	0
1	46	SC_CARRIL_1	LinMoving	Min V3	-5.13	-231.15	-0.46	5.08	-9.77	933.50	1-49	0
1	47	SC_CARRIL_1	LinMoving	Min V3	-5.13	-204.15	-0.46	-62.42	-9.31	1164.64	1-50	0
1	48	SC_CARRIL_1	LinMoving	Min V3	-5.13	-177.15	-0.46	-129.92	-8.85	1368.77	1-51	0
1	49	SC_CARRIL_1	LinMoving	Min V3	-5.13	-150.15	-0.46	-197.41	-8.40	1545.91	1-52	0
1	50	SC_CARRIL_1	LinMoving	Min V3	-5.13	-123.15	-0.46	-264.91	-7.94	1696.04	1-53	0
1	51	SC_CARRIL_1	LinMoving	Min V3	-5.13	-96.15	-0.46	-332.41	-7.48	1819.18	1-54	0
1	52	SC_CARRIL_1	LinMoving	Min V3	-5.13	-69.15	-0.46	-399.91	-7.03	1915.32	1-55	0
1	53	SC_CARRIL_1	LinMoving	Min V3	-5.13	-42.15	-0.46	-467.41	-6.57	1984.45	1-56	0
1	54	SC_CARRIL_1	LinMoving	Min V3	-5.13	-15.15	-0.46	-534.91	-6.11	2026.59	1-57	0
1	55	SC_CARRIL_1	LinMoving	Min V3	-5.13	11.85	-0.46	-602.40	-5.66	2041.72	1-58	0
1	56	SC_CARRIL_1	LinMoving	Min V3	-5.13	38.85	-0.46	-669.90	-5.20	2029.86	1-59	0
1	57	SC_CARRIL_1	LinMoving	Min V3	-5.13	65.85	-0.46	-737.40	-4.74	1990.99	1-60	0
1	58	SC_CARRIL_1	LinMoving	Min V3	-5.13	92.85	-0.46	-804.90	-4.28	1925.13	1-61	0
1	59	SC_CARRIL_1	LinMoving	Min V3	-5.13	119.84	-0.46	-872.40	-3.83	1832.27	1-62	0
1	60	SC_CARRIL_1	LinMoving	Min V3	-5.13	146.84	-0.46	-939.89	-3.37	1712.40	1-63	0
1	61	SC_CARRIL_1	LinMoving	Min V3	-5.13	173.84	-0.46	-1007.39	-2.91	1565.54	1-64	0
1	62	SC_CARRIL_1	LinMoving	Min V3	-5.13	200.84	-0.46	-1074.89	-2.46	1391.67	1-65	0
1	63	SC_CARRIL_1	LinMoving	Min V3	-5.13	217.27	-0.46	-1115.96	-2.00	1190.82	1-66	0
1	64	SC_CARRIL_1	LinMoving	Min V3	-5.13	217.45	-0.46	-1116.41	-1.54	973.65	1-67	0
1	65	SC_CARRIL_1	LinMoving	Min V3	-5.13	217.45	-0.46	-1116.41	-1.09	756.10	1-68	0
1	66	SC_CARRIL_1	LinMoving	Min V3	-5.13	217.45	-0.46	-1116.41	-0.63	538.65	1-69	0
1	67	SC_CARRIL_1	LinMoving	Min V3	-5.13	217.45	-0.46	-1116.42	-0.17	321.39	1-70	0
1	67.5	SC_CARRIL_1	LinMoving	Min V3	-5.13	217.45	-0.46	-1116.46	0.06	213.03	1-71	0
1	68.5	SC_CARRIL_1	LinMoving	Min V3	0.00	0.00	0.00	0.00	0.00	0.00	1-72	0
1	0	SC_CARRIL_1	LinMoving	Max T	0.00	0.00	0.00	0.00	0.00	0.00	1-1	0
1	0.5	SC_CARRIL_1	LinMoving	Max T	-6.52	-344.66	0.43	1457.40	0.68	-12.08	1-2	0
1	1.5	SC_CARRIL_1	LinMoving	Max T	-6.43	-317.68	0.44	1391.51	0.22	318.08	1-3	0
1	2	SC_CARRIL_1	LinMoving	Max T	-6.43	-317.68	0.44	1391.49	0.00	476.68	1-4	0
1	3	SC_CARRIL_1	LinMoving	Max T	-6.32	-291.72	0.44	1326.52	-0.47	741.58	1-5	0
1	4	SC_CARRIL_1	LinMoving	Max T	-6.17	-266.77	0.44	1263.07	-0.94	956.75	1-6	0
1	5	SC_CARRIL_1	LinMoving	Max T	-6.01	-242.85	0.44	1201.37	-1.42	1125.41	1-7	0
1	6	SC_CARRIL_1	LinMoving	Max T	-5.82	-219.95	0.44	1141.40	-1.89	1250.66	1-8	0
1	7	SC_CARRIL_1	LinMoving	Max T	-5.62	-198.06	0.44	1083.18	-2.36	1335.58	1-9	0

ESTRUCTURA E1. ESFUERZOS EN TABLERO PARA TODOS LOS CASOS E HIPOTESIS DE CARGA

Frame	Station	OutputCase	CaseType	StepType	P	V2	V3	T	M2	M3	FrameElem	ElemStation
Text	m	Text	Text	Text	KN	KN	KN	KN-m	KN-m	KN-m	Text	m
1	8	SC_CARRIL_1	LinMoving	Max T	-5.41	-177.19	0.44	1026.71	-2.82	1383.21	1-10	0
1	9	SC_CARRIL_1	LinMoving	Max T	-5.18	-157.31	0.44	971.97	-3.28	1396.59	1-11	0
1	10	SC_CARRIL_1	LinMoving	Max T	-4.95	-138.43	0.44	918.98	-3.72	1378.69	1-12	0
1	11	SC_CARRIL_1	LinMoving	Max T	-4.71	-120.53	0.44	867.73	-4.16	1332.45	1-13	0
1	12	SC_CARRIL_1	LinMoving	Max T	-4.47	-103.61	0.44	818.23	-4.59	1260.77	1-14	0
1	13	SC_CARRIL_1	LinMoving	Max T	-4.23	-87.65	0.43	770.47	-5.00	1166.47	1-15	0
1	14	SC_CARRIL_1	LinMoving	Max T	-3.99	-72.64	0.43	724.45	-5.40	1052.32	1-16	0
1	15	SC_CARRIL_1	LinMoving	Max T	-3.76	-58.57	0.42	680.18	-5.78	921.04	1-17	0
1	16	SC_CARRIL_1	LinMoving	Max T	-3.52	-45.43	0.42	637.64	-6.13	775.26	1-18	0
1	17	SC_CARRIL_1	LinMoving	Max T	-3.30	-33.18	0.41	596.86	-6.47	617.52	1-19	0
1	18	SC_CARRIL_1	LinMoving	Max T	-3.08	-21.83	0.41	557.81	-6.79	450.31	1-20	0
1	19	SC_CARRIL_1	LinMoving	Max T	-2.87	-11.35	0.40	520.51	-7.08	276.00	1-21	0
1	20	SC_CARRIL_1	LinMoving	Max T	-2.67	-1.72	0.39	484.95	-7.35	96.87	1-22	0
1	21	SC_CARRIL_1	LinMoving	Max T	-2.48	7.08	0.38	451.13	-7.58	-84.38	1-23	0
1	22	SC_CARRIL_1	LinMoving	Max T	-2.30	15.07	0.37	419.06	-7.79	-267.19	1-24	0
1	23	SC_CARRIL_1	LinMoving	Max T	-2.14	22.28	0.36	388.73	-7.96	-448.10	1-25	0
1	24	SC_CARRIL_1	LinMoving	Max T	-1.99	28.73	0.35	360.15	-8.11	-625.75	1-26	0
1	25	SC_CARRIL_1	LinMoving	Max T	-1.85	34.43	0.34	333.30	-8.21	-798.43	1-27	0
1	26	SC_CARRIL_1	LinMoving	Max T	-1.73	39.43	0.33	308.20	-8.28	-964.55	1-28	0
1	27	SC_CARRIL_1	LinMoving	Max T	-1.62	43.75	0.32	284.85	-8.31	-1122.67	1-29	0
1	28	SC_CARRIL_1	LinMoving	Max T	-1.53	47.41	0.31	263.24	-8.30	-1271.45	1-30	0
1	29	SC_CARRIL_1	LinMoving	Max T	-1.45	50.45	0.30	243.37	-8.25	-1409.76	1-31	0
1	30	SC_CARRIL_1	LinMoving	Max T	-1.38	52.89	0.28	225.24	-8.15	-1536.57	1-32	0
1	31	SC_CARRIL_1	LinMoving	Max T	-1.33	54.78	0.27	208.85	-8.00	-1653.03	1-33	0
1	32	SC_CARRIL_1	LinMoving	Max T	-1.29	55.81	0.25	192.85	-7.72	-1759.39	1-34	0
1	33	SC_CARRIL_1	LinMoving	Max T	-1.26	56.70	0.24	180.28	-7.48	-1846.90	1-35	0
1	33.75	SC_CARRIL_1	LinMoving	Max T	-1.25	57.42	0.22	170.09	-7.23	-1899.93	1-36	0
1	34.5	SC_CARRIL_1	LinMoving	Max T	-5.28	-515.85	-0.23	997.73	-7.23	-1953.34	1-37	0
1	35.25	SC_CARRIL_1	LinMoving	Max T	-5.27	-488.88	-0.21	940.17	-6.53	-1575.77	1-38	0
1	36	SC_CARRIL_1	LinMoving	Max T	-5.26	-476.10	-0.20	916.62	-5.94	-1221.28	1-39	0
1	37	SC_CARRIL_1	LinMoving	Max T	-5.23	-436.16	-0.18	829.32	-5.18	-794.46	1-40	0
1	38	SC_CARRIL_1	LinMoving	Max T	-5.19	-410.52	-0.17	776.46	-4.55	-403.60	1-41	0
1	39	SC_CARRIL_1	LinMoving	Max T	-5.14	-385.41	-0.15	725.34	-3.98	-52.77	1-42	0
1	40	SC_CARRIL_1	LinMoving	Max T	-5.08	-360.85	-0.14	675.97	-3.45	258.72	1-43	0
1	41	SC_CARRIL_1	LinMoving	Max T	-5.00	-336.89	-0.13	628.34	-2.96	531.72	1-44	0
1	42	SC_CARRIL_1	LinMoving	Max T	-4.90	-313.56	-0.11	582.46	-2.51	767.23	1-45	0
1	43	SC_CARRIL_1	LinMoving	Max T	-4.80	-290.87	-0.10	538.32	-2.11	966.41	1-46	0
1	44	SC_CARRIL_1	LinMoving	Max T	-4.67	-268.87	-0.09	495.92	-1.74	1130.59	1-47	0
1	45	SC_CARRIL_1	LinMoving	Max T	-4.54	-247.58	-0.08	455.26	-1.42	1261.20	1-48	0
1	46	SC_CARRIL_1	LinMoving	Max T	-4.39	-227.03	-0.07	416.35	-1.12	1359.84	1-49	0
1	47	SC_CARRIL_1	LinMoving	Max T	-4.22	-207.23	-0.06	379.18	-0.86	1428.24	1-50	0
1	48	SC_CARRIL_1	LinMoving	Max T	-4.04	-188.23	-0.05	343.76	-0.64	1468.22	1-51	0
1	49	SC_CARRIL_1	LinMoving	Max T	-3.86	-170.03	-0.04	310.08	-0.44	1481.76	1-52	0
1	50	SC_CARRIL_1	LinMoving	Max T	-3.66	-152.66	-0.04	278.14	-0.27	1470.94	1-53	0
1	51	SC_CARRIL_1	LinMoving	Max T	-3.45	-136.14	-0.03	247.94	-0.13	1437.92	1-54	0
1	52	SC_CARRIL_1	LinMoving	Max T	-3.23	-120.50	-0.02	219.49	-0.01	1385.01	1-55	0
1	53	SC_CARRIL_1	LinMoving	Max T	-3.00	-105.74	-0.02	192.78	0.09	1314.57	1-56	0
1	54	SC_CARRIL_1	LinMoving	Max T	-2.77	-91.89	-0.01	167.81	0.16	1229.08	1-57	0
1	55	SC_CARRIL_1	LinMoving	Max T	-2.53	-78.96	-0.01	144.59	0.22	1131.10	1-58	0
1	56	SC_CARRIL_1	LinMoving	Max T	-2.29	-66.97	0.00	123.11	0.25	1023.25	1-59	0
1	57	SC_CARRIL_1	LinMoving	Max T	-2.05	-55.93	0.00	103.37	0.28	908.25	1-60	0
1	58	SC_CARRIL_1	LinMoving	Max T	-1.81	-45.85	0.00	85.38	0.28	788.86	1-61	0
1	59	SC_CARRIL_1	LinMoving	Max T	-1.57	-36.75	0.01	69.13	0.28	667.92	1-62	0
1	60	SC_CARRIL_1	LinMoving	Max T	-1.34	-28.63	0.01	54.62	0.27	548.31	1-63	0
1	61	SC_CARRIL_1	LinMoving	Max T	-1.12	-21.50	0.01	41.86	0.24	432.99	1-64	0
1	62	SC_CARRIL_1	LinMoving	Max T	-0.90	-15.38	0.01	30.84	0.21	324.92	1-65	0
1	63	SC_CARRIL_1	LinMoving	Max T	-0.70	-10.27	0.01	21.56	0.18	227.13	1-66	0
1	64	SC_CARRIL_1	LinMoving	Max T	-0.52	-6.17	0.01	14.03	0.14	142.68	1-67	0
1	65	SC_CARRIL_1	LinMoving	Max T	-0.35	-3.10	0.01	8.23	0.10	74.64	1-68	0
1	66	SC_CARRIL_1	LinMoving	Max T	-0.21	-1.04	0.01	4.19	0.07	26.11	1-69	0
1	67	SC_CARRIL_1	LinMoving	Max T	-0.09	-0.01	0.00	1.66	0.03	0.31	1-70	0
1	67.5	SC_CARRIL_1	LinMoving	Max T	-0.09	-0.01	0.00	1.66	0.03	0.32	1-71	0
1	68.5	SC_CARRIL_1	LinMoving	Max T	0.00	-13.50	0.00	33.75	0.00	-6.74	1-72	0
1	0	SC_CARRIL_1	LinMoving	Min T	0.00	0.00	0.00	0.00	0.00	0.00	1-1	0
1	0.5	SC_CARRIL_1	LinMoving	Min T	0.00	-0.02	0.00	-0.01	0.00	-0.28	1-2	0
1	1.5	SC_CARRIL_1	LinMoving	Min T	-0.09	0.01	0.00	-1.66	0.03	0.31	1-3	0
1	2	SC_CARRIL_1	LinMoving	Min T	-0.09	0.01	0.00	-1.66	0.03	0.30	1-4	0
1	3	SC_CARRIL_1	LinMoving	Min T	-0.21	1.04	-0.01	-4.19	0.07	26.11	1-5	0
1	4	SC_CARRIL_1	LinMoving	Min T	-0.35	3.10	-0.01	-8.23	0.10	74.64	1-6	0
1	5	SC_CARRIL_1	LinMoving	Min T	-0.52	6.17	-0.01	-14.03	0.14	142.68	1-7	0
1	6	SC_CARRIL_1	LinMoving	Min T	-0.70	10.27	-0.01	-21.56	0.18	227.13	1-8	0
1	7	SC_CARRIL_1	LinMoving	Min T	-0.90	15.38	-0.01	-30.84	0.21	324.92	1-9	0
1	8	SC_CARRIL_1	LinMoving	Min T	-1.12	21.50	-0.01	-41.86	0.24	432.99	1-10	0
1	9	SC_CARRIL_1	LinMoving	Min T	-1.34	28.63	-0.01	-54.62	0.27	548.31	1-11	0
1	10	SC_CARRIL_1	LinMoving	Min T	-1.57	36.75	-0.01	-69.13	0.28	667.92	1-12	0
1	11	SC_CARRIL_1	LinMoving	Min T	-1.81	45.85	0.00	-85.38	0.28	788.86	1-13	0
1	12	SC_CARRIL_1	LinMoving	Min T	-2.05	55.93	0.00	-103.37	0.27	908.25	1-14	0
1	13	SC_CARRIL_1	LinMoving	Min T	-2.29	66.97	0.00	-123.11	0.25	1023.25	1-15	0
1	14	SC_CARRIL_1	LinMoving	Min T	-2.53	78.96	0.01	-144.59	0.21	1131.10	1-16	0
1	15	SC_CARRIL_1	LinMoving	Min T	-2.77	91.89	0.01	-167.81	0.16	1229.08	1-17	0
1	16	SC_CARRIL_1	LinMoving	Min T	-3.00	105.74	0.02	-192.78	0.08	1314.57	1-18	0

ESTRUCTURA E1. ESFUERZOS EN TABLERO PARA TODOS LOS CASOS E HIPOTESIS DE CARGA

Frame	Station	OutputCase	CaseType	StepType	P	V2	V3	T	M2	M3	FrameElem	ElemStation
Text	m	Text	Text	Text	KN	KN	KN	KN-m	KN-m	KN-m	Text	m
1	17	SC_CARRIL_1	LinMoving	Min T	-3.23	120.50	0.02	-219.49	-0.01	1385.01	1-19	0
1	18	SC_CARRIL_1	LinMoving	Min T	-3.45	136.14	0.03	-247.94	-0.13	1437.92	1-20	0
1	19	SC_CARRIL_1	LinMoving	Min T	-3.66	152.66	0.04	-278.14	-0.27	1470.94	1-21	0
1	20	SC_CARRIL_1	LinMoving	Min T	-3.86	170.03	0.04	-310.08	-0.44	1481.76	1-22	0
1	21	SC_CARRIL_1	LinMoving	Min T	-4.04	188.23	0.05	-343.76	-0.64	1468.22	1-23	0
1	22	SC_CARRIL_1	LinMoving	Min T	-4.22	207.23	0.06	-379.19	-0.87	1428.24	1-24	0
1	23	SC_CARRIL_1	LinMoving	Min T	-4.39	227.03	0.07	-416.36	-1.13	1359.84	1-25	0
1	24	SC_CARRIL_1	LinMoving	Min T	-4.54	247.58	0.08	-455.27	-1.42	1261.20	1-26	0
1	25	SC_CARRIL_1	LinMoving	Min T	-4.67	268.87	0.09	-495.92	-1.75	1130.58	1-27	0
1	26	SC_CARRIL_1	LinMoving	Min T	-4.80	290.87	0.10	-538.32	-2.11	966.41	1-28	0
1	27	SC_CARRIL_1	LinMoving	Min T	-4.90	313.56	0.11	-582.46	-2.52	767.22	1-29	0
1	28	SC_CARRIL_1	LinMoving	Min T	-5.00	336.89	0.13	-628.35	-2.96	531.72	1-30	0
1	29	SC_CARRIL_1	LinMoving	Min T	-5.08	360.85	0.14	-675.98	-3.45	258.72	1-31	0
1	30	SC_CARRIL_1	LinMoving	Min T	-5.14	385.41	0.15	-725.35	-3.98	-52.77	1-32	0
1	31	SC_CARRIL_1	LinMoving	Min T	-5.19	410.52	0.17	-776.46	-4.56	-403.60	1-33	0
1	32	SC_CARRIL_1	LinMoving	Min T	-5.24	449.99	0.19	-861.70	-5.28	-787.53	1-34	0
1	33	SC_CARRIL_1	LinMoving	Min T	-5.26	476.10	0.20	-916.62	-5.95	-1221.08	1-35	0
1	33.75	SC_CARRIL_1	LinMoving	Min T	-5.27	488.88	0.21	-940.18	-6.53	-1575.77	1-36	0
1	34.5	SC_CARRIL_1	LinMoving	Min T	-1.25	-57.45	-0.21	-160.15	-6.86	-1941.58	1-37	0
1	35.25	SC_CARRIL_1	LinMoving	Min T	-1.25	-57.42	-0.22	-170.09	-7.23	-1898.93	1-38	0
1	36	SC_CARRIL_1	LinMoving	Min T	-1.26	-56.70	-0.24	-180.27	-7.49	-1841.95	1-39	0
1	37	SC_CARRIL_1	LinMoving	Min T	-1.29	-56.14	-0.25	-194.22	-7.82	-1752.46	1-40	0
1	38	SC_CARRIL_1	LinMoving	Min T	-1.33	-54.78	-0.27	-208.86	-8.01	-1651.03	1-41	0
1	39	SC_CARRIL_1	LinMoving	Min T	-1.38	-52.89	-0.28	-225.24	-8.16	-1530.57	1-42	0
1	40	SC_CARRIL_1	LinMoving	Min T	-1.45	-50.45	-0.30	-243.37	-8.25	-1409.76	1-43	0
1	41	SC_CARRIL_1	LinMoving	Min T	-1.53	-47.41	-0.31	-263.24	-8.31	-1271.45	1-44	0
1	42	SC_CARRIL_1	LinMoving	Min T	-1.62	-43.75	-0.32	-284.85	-8.32	-1122.67	1-45	0
1	43	SC_CARRIL_1	LinMoving	Min T	-1.73	-39.43	-0.33	-308.21	-8.29	-964.55	1-46	0
1	44	SC_CARRIL_1	LinMoving	Min T	-1.85	-34.43	-0.34	-333.31	-8.22	-798.43	1-47	0
1	45	SC_CARRIL_1	LinMoving	Min T	-1.99	-28.73	-0.36	-360.15	-8.11	-625.75	1-48	0
1	46	SC_CARRIL_1	LinMoving	Min T	-2.14	-22.28	-0.37	-388.73	-7.97	-448.10	1-49	0
1	47	SC_CARRIL_1	LinMoving	Min T	-2.30	-15.07	-0.37	-419.06	-7.79	-267.19	1-50	0
1	48	SC_CARRIL_1	LinMoving	Min T	-2.48	-7.08	-0.38	-451.14	-7.59	-84.88	1-51	0
1	49	SC_CARRIL_1	LinMoving	Min T	-2.67	1.72	-0.39	-484.95	-7.35	96.47	1-52	0
1	50	SC_CARRIL_1	LinMoving	Min T	-2.87	11.35	-0.40	-520.51	-7.08	276.00	1-53	0
1	51	SC_CARRIL_1	LinMoving	Min T	-3.08	21.83	-0.41	-557.81	-6.79	450.81	1-54	0
1	52	SC_CARRIL_1	LinMoving	Min T	-3.30	33.18	-0.41	-596.86	-6.48	617.52	1-55	0
1	53	SC_CARRIL_1	LinMoving	Min T	-3.52	45.43	-0.42	-637.65	-6.14	775.26	1-56	0
1	54	SC_CARRIL_1	LinMoving	Min T	-3.76	58.57	-0.42	-680.18	-5.78	921.04	1-57	0
1	55	SC_CARRIL_1	LinMoving	Min T	-3.99	72.64	-0.43	-724.45	-5.40	1052.32	1-58	0
1	56	SC_CARRIL_1	LinMoving	Min T	-4.23	87.65	-0.43	-770.47	-5.00	1166.47	1-59	0
1	57	SC_CARRIL_1	LinMoving	Min T	-4.47	103.61	-0.44	-818.23	-4.59	1260.77	1-60	0
1	58	SC_CARRIL_1	LinMoving	Min T	-4.71	120.53	-0.44	-867.74	-4.16	1332.45	1-61	0
1	59	SC_CARRIL_1	LinMoving	Min T	-4.95	138.43	-0.44	-918.99	-3.73	1378.69	1-62	0
1	60	SC_CARRIL_1	LinMoving	Min T	-5.18	157.31	-0.44	-971.98	-3.28	1396.59	1-63	0
1	61	SC_CARRIL_1	LinMoving	Min T	-5.41	177.19	-0.44	-1026.71	-2.82	1383.21	1-64	0
1	62	SC_CARRIL_1	LinMoving	Min T	-5.62	198.06	-0.44	-1083.19	-2.36	1335.58	1-65	0
1	63	SC_CARRIL_1	LinMoving	Min T	-5.82	219.95	-0.44	-1141.41	-1.89	1250.66	1-66	0
1	64	SC_CARRIL_1	LinMoving	Min T	-6.01	242.85	-0.44	-1201.37	-1.42	1125.41	1-67	0
1	65	SC_CARRIL_1	LinMoving	Min T	-6.17	266.77	-0.44	-1263.08	-0.94	956.75	1-68	0
1	66	SC_CARRIL_1	LinMoving	Min T	-6.32	291.72	-0.44	-1326.53	-0.47	741.58	1-69	0
1	67	SC_CARRIL_1	LinMoving	Min T	-6.43	317.68	-0.44	-1391.51	0.00	476.92	1-70	0
1	67.5	SC_CARRIL_1	LinMoving	Min T	-6.43	317.68	-0.44	-1391.54	0.22	318.53	1-71	0
1	68.5	SC_CARRIL_1	LinMoving	Min T	0.00	0.00	0.00	0.00	0.00	0.00	1-72	0
1	0	SC_CARRIL_1	LinMoving	Max M2	0.00	0.00	0.00	0.00	0.00	0.00	1-1	0
1	0.5	SC_CARRIL_1	LinMoving	Max M2	-6.53	-344.68	0.43	1457.38	0.68	-12.36	1-2	0
1	1.5	SC_CARRIL_1	LinMoving	Max M2	-5.78	-338.16	0.09	1085.63	0.42	339.57	1-3	0
1	2	SC_CARRIL_1	LinMoving	Max M2	-5.09	-318.98	0.05	975.69	0.39	480.33	1-4	0
1	3	SC_CARRIL_1	LinMoving	Max M2	-4.13	-254.14	0.02	754.04	0.36	678.67	1-5	0
1	4	SC_CARRIL_1	LinMoving	Max M2	-3.54	-198.23	0.00	585.89	0.35	805.20	1-6	0
1	5	SC_CARRIL_1	LinMoving	Max M2	-3.14	-149.66	-0.01	448.31	0.36	879.76	1-7	0
1	6	SC_CARRIL_1	LinMoving	Max M2	-2.87	-106.21	-0.01	329.43	0.37	912.23	1-8	0
1	7	SC_CARRIL_1	LinMoving	Max M2	-2.66	-66.33	-0.01	222.73	0.38	907.96	1-9	0
1	8	SC_CARRIL_1	LinMoving	Max M2	-2.51	-29.01	-0.02	124.36	0.39	870.04	1-10	0
1	9	SC_CARRIL_1	LinMoving	Max M2	-2.38	6.44	-0.02	31.94	0.41	800.40	1-11	0
1	10	SC_CARRIL_1	LinMoving	Max M2	-2.28	39.43	-0.02	-53.49	0.43	701.33	1-12	0
1	11	SC_CARRIL_1	LinMoving	Max M2	-2.20	43.46	-0.02	-65.93	0.45	605.48	1-13	0
1	12	SC_CARRIL_1	LinMoving	Max M2	-2.13	41.01	-0.02	-61.72	0.47	524.34	1-14	0
1	13	SC_CARRIL_1	LinMoving	Max M2	-2.08	38.97	-0.02	-58.23	0.49	454.19	1-15	0
1	14	SC_CARRIL_1	LinMoving	Max M2	-2.03	37.26	-0.02	-55.29	0.51	392.43	1-16	0
1	15	SC_CARRIL_1	LinMoving	Max M2	-1.98	35.80	-0.02	-52.79	0.53	337.24	1-17	0
1	16	SC_CARRIL_1	LinMoving	Max M2	-1.95	34.55	-0.02	-50.63	0.55	287.26	1-18	0
1	17	SC_CARRIL_1	LinMoving	Max M2	-1.91	33.45	-0.02	-48.75	0.57	241.48	1-19	0
1	18	SC_CARRIL_1	LinMoving	Max M2	-1.88	32.49	-0.02	-47.10	0.59	199.15	1-20	0
1	19	SC_CARRIL_1	LinMoving	Max M2	-1.86	31.64	-0.02	-45.64	0.61	159.66	1-21	0
1	20	SC_CARRIL_1	LinMoving	Max M2	-1.83	30.88	-0.02	-44.34	0.63	122.55	1-22	0
1	21	SC_CARRIL_1	LinMoving	Max M2	-1.81	30.21	-0.02	-43.17	0.65	87.45	1-23	0
1	22	SC_CARRIL_1	LinMoving	Max M2	-1.79	29.59	-0.02	-42.12	0.67	54.07	1-24	0
1	23	SC_CARRIL_1	LinMoving	Max M2	-1.77	29.04	-0.02	-41.17	0.70	22.15	1-25	0
1	24	SC_CARRIL_1	LinMoving	Max M2	-1.76	28.54	-0.02	-40.31	0.72	-8.50	1-26	0
1	25	SC_CARRIL_1	LinMoving	Max M2	-1.74	28.08	-0.02	-39.52	0.74	-38.04	1-27	0

ESTRUCTURA E1. ESFUERZOS EN TABLERO PARA TODOS LOS CASOS E HIPOTESIS DE CARGA

Frame	Station	OutputCase	CaseType	StepType	P	V2	V3	T	M2	M3	FrameElem	ElemStation
Text	m	Text	Text	Text	KN	KN	KN	KN-m	KN-m	KN-m	Text	m
1	26	SC_CARRIL_1	LinMoving	Max M2	-1.73	27.66	-0.02	-38.79	0.76	-66.51	1-28	0
1	27	SC_CARRIL_1	LinMoving	Max M2	-1.72	27.27	-0.02	-38.13	0.78	-94.33	1-29	0
1	28	SC_CARRIL_1	LinMoving	Max M2	-1.70	26.91	-0.02	-37.51	0.80	-121.30	1-30	0
1	29	SC_CARRIL_1	LinMoving	Max M2	-1.69	26.58	-0.02	-36.94	0.83	-147.60	1-31	0
1	30	SC_CARRIL_1	LinMoving	Max M2	-1.68	26.27	-0.02	-36.41	0.85	-173.31	1-32	0
1	31	SC_CARRIL_1	LinMoving	Max M2	-1.67	25.99	-0.02	-35.92	0.87	-198.47	1-33	0
1	32	SC_CARRIL_1	LinMoving	Max M2	-1.66	25.72	-0.02	-35.46	0.89	-223.16	1-34	0
1	33	SC_CARRIL_1	LinMoving	Max M2	-1.66	25.47	-0.02	-35.03	0.91	-247.35	1-35	0
1	33.75	SC_CARRIL_1	LinMoving	Max M2	-1.65	25.29	-0.02	-34.73	0.93	-265.28	1-36	0
1	34.5	SC_CARRIL_1	LinMoving	Max M2	-1.65	-25.22	0.02	34.69	0.95	-283.01	1-37	0
1	35.25	SC_CARRIL_1	LinMoving	Max M2	-1.65	-25.39	0.02	34.98	0.93	-265.21	1-38	0
1	36	SC_CARRIL_1	LinMoving	Max M2	-1.66	-25.57	0.02	35.29	0.91	-247.27	1-39	0
1	37	SC_CARRIL_1	LinMoving	Max M2	-1.67	-25.82	0.02	35.72	0.89	-222.91	1-40	0
1	38	SC_CARRIL_1	LinMoving	Max M2	-1.68	-26.08	0.02	36.18	0.87	-198.13	1-41	0
1	39	SC_CARRIL_1	LinMoving	Max M2	-1.69	-26.37	0.02	36.67	0.85	-172.86	1-42	0
1	40	SC_CARRIL_1	LinMoving	Max M2	-1.70	-26.68	0.02	37.20	0.83	-147.05	1-43	0
1	41	SC_CARRIL_1	LinMoving	Max M2	-1.71	-27.01	0.02	37.77	0.80	-120.65	1-44	0
1	42	SC_CARRIL_1	LinMoving	Max M2	-1.72	-27.37	0.02	38.38	0.78	-93.58	1-45	0
1	43	SC_CARRIL_1	LinMoving	Max M2	-1.73	-27.76	0.02	39.05	0.76	-65.76	1-46	0
1	44	SC_CARRIL_1	LinMoving	Max M2	-1.75	-28.18	0.02	39.77	0.74	-37.09	1-47	0
1	45	SC_CARRIL_1	LinMoving	Max M2	-1.76	-28.64	0.02	40.56	0.72	-7.44	1-48	0
1	46	SC_CARRIL_1	LinMoving	Max M2	-1.78	-29.14	0.02	41.43	0.70	23.30	1-49	0
1	47	SC_CARRIL_1	LinMoving	Max M2	-1.79	-29.69	0.02	42.38	0.67	55.32	1-50	0
1	48	SC_CARRIL_1	LinMoving	Max M2	-1.81	-30.30	0.02	43.43	0.65	88.81	1-51	0
1	49	SC_CARRIL_1	LinMoving	Max M2	-1.83	-30.98	0.02	44.59	0.63	124.00	1-52	0
1	50	SC_CARRIL_1	LinMoving	Max M2	-1.86	-31.74	0.02	45.89	0.61	161.21	1-53	0
1	51	SC_CARRIL_1	LinMoving	Max M2	-1.88	-32.59	0.02	47.35	0.59	200.80	1-54	0
1	52	SC_CARRIL_1	LinMoving	Max M2	-1.91	-33.55	0.02	49.00	0.57	243.23	1-55	0
1	53	SC_CARRIL_1	LinMoving	Max M2	-1.95	-34.64	0.02	50.88	0.55	289.10	1-56	0
1	54	SC_CARRIL_1	LinMoving	Max M2	-1.98	-35.90	0.02	53.04	0.53	339.17	1-57	0
1	55	SC_CARRIL_1	LinMoving	Max M2	-2.03	-37.35	0.02	55.54	0.51	394.45	1-58	0
1	56	SC_CARRIL_1	LinMoving	Max M2	-2.08	-39.06	0.02	58.48	0.49	456.28	1-59	0
1	57	SC_CARRIL_1	LinMoving	Max M2	-2.13	-41.10	0.02	61.97	0.47	526.50	1-60	0
1	58	SC_CARRIL_1	LinMoving	Max M2	-2.20	-43.55	0.02	66.17	0.45	607.70	1-61	0
1	59	SC_CARRIL_1	LinMoving	Max M2	-2.28	-39.27	0.02	53.13	0.43	703.59	1-62	0
1	60	SC_CARRIL_1	LinMoving	Max M2	-2.38	-6.21	0.02	-32.47	0.41	802.33	1-63	0
1	61	SC_CARRIL_1	LinMoving	Max M2	-2.51	29.21	0.02	-124.83	0.39	871.56	1-64	0
1	62	SC_CARRIL_1	LinMoving	Max M2	-2.66	66.51	0.01	-223.12	0.38	909.10	1-65	0
1	63	SC_CARRIL_1	LinMoving	Max M2	-2.87	106.35	0.01	-329.73	0.37	913.02	1-66	0
1	64	SC_CARRIL_1	LinMoving	Max M2	-3.14	149.76	0.01	-448.49	0.36	880.23	1-67	0
1	65	SC_CARRIL_1	LinMoving	Max M2	-3.54	198.29	0.00	-585.93	0.35	805.42	1-68	0
1	66	SC_CARRIL_1	LinMoving	Max M2	-4.13	254.16	-0.02	-753.91	0.36	678.72	1-69	0
1	67	SC_CARRIL_1	LinMoving	Max M2	-5.08	318.98	-0.05	-975.39	0.39	480.52	1-70	0
1	67.5	SC_CARRIL_1	LinMoving	Max M2	-5.78	338.18	-0.09	-1085.29	0.42	340.00	1-71	0
1	68.5	SC_CARRIL_1	LinMoving	Max M2	0.00	0.00	0.00	0.00	0.00	0.00	1-72	0
1	0	SC_CARRIL_1	LinMoving	Min M2	0.00	0.00	0.00	0.00	0.00	0.00	1-1	0
1	0.5	SC_CARRIL_1	LinMoving	Min M2	0.00	0.00	0.00	0.00	0.00	0.00	1-2	0
1	1.5	SC_CARRIL_1	LinMoving	Min M2	-0.75	20.48	0.34	304.22	-0.18	-21.18	1-3	0
1	2	SC_CARRIL_1	LinMoving	Min M2	-1.44	1.30	0.38	414.15	-0.36	-3.34	1-4	0
1	3	SC_CARRIL_1	LinMoving	Min M2	-2.39	-36.54	0.42	568.30	-0.76	89.02	1-5	0
1	4	SC_CARRIL_1	LinMoving	Min M2	-2.99	-65.45	0.43	668.95	-1.19	226.19	1-6	0
1	5	SC_CARRIL_1	LinMoving	Min M2	-3.38	-87.02	0.44	739.03	-1.63	388.33	1-7	0
1	6	SC_CARRIL_1	LinMoving	Min M2	-3.66	-103.47	0.45	790.41	-2.07	565.56	1-8	0
1	7	SC_CARRIL_1	LinMoving	Min M2	-3.86	-116.35	0.45	829.62	-2.52	752.54	1-9	0
1	8	SC_CARRIL_1	LinMoving	Min M2	-4.02	-126.67	0.45	860.49	-2.97	946.16	1-10	0
1	9	SC_CARRIL_1	LinMoving	Min M2	-4.14	-135.12	0.45	885.41	-3.42	1144.50	1-11	0
1	10	SC_CARRIL_1	LinMoving	Min M2	-4.24	-141.11	0.45	903.35	-3.87	1345.28	1-12	0
1	11	SC_CARRIL_1	LinMoving	Min M2	-4.32	-118.14	0.45	848.28	-4.33	1515.83	1-13	0
1	12	SC_CARRIL_1	LinMoving	Min M2	-4.39	-88.69	0.45	776.57	-4.78	1644.67	1-14	0
1	13	SC_CARRIL_1	LinMoving	Min M2	-4.45	-59.66	0.45	705.59	-5.23	1735.53	1-15	0
1	14	SC_CARRIL_1	LinMoving	Min M2	-4.50	-30.95	0.46	635.15	-5.69	1790.99	1-16	0
1	15	SC_CARRIL_1	LinMoving	Min M2	-4.54	-2.49	0.46	565.15	-6.14	1812.88	1-17	0
1	16	SC_CARRIL_1	LinMoving	Min M2	-4.58	25.77	0.46	495.49	-6.60	1802.57	1-18	0
1	17	SC_CARRIL_1	LinMoving	Min M2	-4.61	53.86	0.46	426.11	-7.05	1761.05	1-19	0
1	18	SC_CARRIL_1	LinMoving	Min M2	-4.64	81.82	0.46	356.97	-7.51	1689.09	1-20	0
1	19	SC_CARRIL_1	LinMoving	Min M2	-4.67	109.67	0.46	288.01	-7.96	1587.28	1-21	0
1	20	SC_CARRIL_1	LinMoving	Min M2	-4.69	137.43	0.46	219.21	-8.42	1456.09	1-22	0
1	21	SC_CARRIL_1	LinMoving	Min M2	-4.71	165.10	0.46	150.55	-8.87	1295.89	1-23	0
1	22	SC_CARRIL_1	LinMoving	Min M2	-4.73	192.71	0.46	82.00	-9.33	1106.98	1-24	0
1	23	SC_CARRIL_1	LinMoving	Min M2	-4.75	220.27	0.46	13.55	-9.79	889.60	1-25	0
1	24	SC_CARRIL_1	LinMoving	Min M2	-4.77	247.77	0.46	-54.81	-10.24	643.95	1-26	0
1	25	SC_CARRIL_1	LinMoving	Min M2	-4.78	275.23	0.46	-123.10	-10.70	370.19	1-27	0
1	26	SC_CARRIL_1	LinMoving	Min M2	-4.80	302.65	0.46	-191.32	-11.15	68.47	1-28	0
1	27	SC_CARRIL_1	LinMoving	Min M2	-4.81	330.04	0.46	-259.49	-11.61	-261.11	1-29	0
1	28	SC_CARRIL_1	LinMoving	Min M2	-4.82	357.39	0.46	-327.60	-12.07	-618.44	1-30	0
1	29	SC_CARRIL_1	LinMoving	Min M2	-4.83	384.72	0.46	-395.67	-12.52	-1003.43	1-31	0
1	30	SC_CARRIL_1	LinMoving	Min M2	-4.84	412.03	0.46	-463.70	-12.98	-1416.03	1-32	0
1	31	SC_CARRIL_1	LinMoving	Min M2	-4.85	439.32	0.46	-531.69	-13.44	-1856.16	1-33	0
1	32	SC_CARRIL_1	LinMoving	Min M2	-4.86	480.08	0.46	-633.39	-13.89	-2321.77	1-34	0
1	33	SC_CARRIL_1	LinMoving	Min M2	-4.87	507.33	0.46	-701.31	-14.35	-2818.63	1-35	0
1	33.75	SC_CARRIL_1	LinMoving	Min M2	-4.88	521.01	0.46	-735.36	-14.69	-3210.42	1-36	0

ESTRUCTURA E1. ESFUERZOS EN TABLERO PARA TODOS LOS CASOS E HIPOTESIS DE CARGA

Frame	Station	OutputCase	CaseType	StepType	P	V2	V3	T	M2	M3	FrameElem	ElemStation
Text	m	Text	Text	Text	KN	KN	KN	KN-m	KN-m	KN-m	Text	m
1	34.5	SC_CARRIL_1	LinMoving	Min M2	-4.88	-548.08	-0.46	802.88	-15.03	-3615.92	1-37	0
1	35.25	SC_CARRIL_1	LinMoving	Min M2	-4.87	-520.91	-0.46	735.10	-14.69	-3211.49	1-38	0
1	36	SC_CARRIL_1	LinMoving	Min M2	-4.87	-507.23	-0.46	701.06	-14.35	-2811.96	1-39	0
1	37	SC_CARRIL_1	LinMoving	Min M2	-4.86	-466.48	-0.46	599.38	-13.89	-2324.01	1-40	0
1	38	SC_CARRIL_1	LinMoving	Min M2	-4.85	-439.22	-0.46	531.42	-13.44	-1850.50	1-41	0
1	39	SC_CARRIL_1	LinMoving	Min M2	-4.84	-411.93	-0.46	463.43	-12.98	-1416.47	1-42	0
1	40	SC_CARRIL_1	LinMoving	Min M2	-4.83	-384.62	-0.46	395.41	-12.52	-1001.98	1-43	0
1	41	SC_CARRIL_1	LinMoving	Min M2	-4.82	-357.29	-0.46	327.34	-12.07	-619.08	1-44	0
1	42	SC_CARRIL_1	LinMoving	Min M2	-4.81	-329.94	-0.46	259.23	-11.61	-261.86	1-45	0
1	43	SC_CARRIL_1	LinMoving	Min M2	-4.79	-302.55	-0.46	191.06	-11.16	67.62	1-46	0
1	44	SC_CARRIL_1	LinMoving	Min M2	-4.78	-275.13	-0.46	122.84	-10.70	369.24	1-47	0
1	45	SC_CARRIL_1	LinMoving	Min M2	-4.77	-247.67	-0.46	54.55	-10.24	642.90	1-48	0
1	46	SC_CARRIL_1	LinMoving	Min M2	-4.75	-220.17	-0.46	-13.81	-9.79	888.45	1-49	0
1	47	SC_CARRIL_1	LinMoving	Min M2	-4.73	-192.62	-0.46	-82.26	-9.33	1105.73	1-50	0
1	48	SC_CARRIL_1	LinMoving	Min M2	-4.71	-165.01	-0.46	-150.81	-8.88	1294.54	1-51	0
1	49	SC_CARRIL_1	LinMoving	Min M2	-4.69	-137.33	-0.46	-219.47	-8.42	1454.64	1-52	0
1	50	SC_CARRIL_1	LinMoving	Min M2	-4.67	-109.57	-0.46	-288.27	-7.96	1585.73	1-53	0
1	51	SC_CARRIL_1	LinMoving	Min M2	-4.64	-81.72	-0.46	-357.23	-7.51	1687.44	1-54	0
1	52	SC_CARRIL_1	LinMoving	Min M2	-4.61	-53.76	-0.46	-426.37	-7.05	1759.30	1-55	0
1	53	SC_CARRIL_1	LinMoving	Min M2	-4.58	-25.67	-0.46	-495.75	-6.60	1800.73	1-56	0
1	54	SC_CARRIL_1	LinMoving	Min M2	-4.54	2.58	-0.46	-565.41	-6.14	1810.96	1-57	0
1	55	SC_CARRIL_1	LinMoving	Min M2	-4.50	31.04	-0.46	-635.41	-5.69	1788.97	1-58	0
1	56	SC_CARRIL_1	LinMoving	Min M2	-4.45	59.75	-0.45	-705.84	-5.23	1733.44	1-59	0
1	57	SC_CARRIL_1	LinMoving	Min M2	-4.39	88.78	-0.45	-776.83	-4.78	1642.51	1-60	0
1	58	SC_CARRIL_1	LinMoving	Min M2	-4.32	118.23	-0.45	-848.53	-4.33	1513.61	1-61	0
1	59	SC_CARRIL_1	LinMoving	Min M2	-4.24	140.95	-0.45	-902.98	-3.87	1343.02	1-62	0
1	60	SC_CARRIL_1	LinMoving	Min M2	-4.14	134.89	-0.45	-884.88	-3.42	1142.58	1-63	0
1	61	SC_CARRIL_1	LinMoving	Min M2	-4.02	126.47	-0.45	-860.03	-2.97	944.64	1-64	0
1	62	SC_CARRIL_1	LinMoving	Min M2	-3.86	116.18	-0.45	-829.23	-2.52	751.40	1-65	0
1	63	SC_CARRIL_1	LinMoving	Min M2	-3.66	103.33	-0.45	-790.12	-2.07	564.78	1-66	0
1	64	SC_CARRIL_1	LinMoving	Min M2	-3.38	86.92	-0.44	-738.86	-1.63	387.86	1-67	0
1	65	SC_CARRIL_1	LinMoving	Min M2	-2.99	65.39	-0.43	-668.92	-1.19	225.97	1-68	0
1	66	SC_CARRIL_1	LinMoving	Min M2	-2.39	36.52	-0.42	-568.43	-0.76	88.97	1-69	0
1	67	SC_CARRIL_1	LinMoving	Min M2	-1.44	-1.30	-0.38	-414.46	-0.36	-3.29	1-70	0
1	67.5	SC_CARRIL_1	LinMoving	Min M2	-0.75	-20.51	-0.34	-304.60	-0.18	-21.15	1-71	0
1	68.5	SC_CARRIL_1	LinMoving	Min M2	0.00	0.00	0.00	0.00	0.00	0.00	1-72	0
1	0	SC_CARRIL_1	LinMoving	Max M3	0.00	0.00	0.00	0.00	0.00	0.00	1-1	0
1	0.5	SC_CARRIL_1	LinMoving	Max M3	0.16	17.97	0.14	88.58	0.05	0.14	1-2	0
1	1.5	SC_CARRIL_1	LinMoving	Max M3	-5.25	-374.77	0.23	1226.97	0.31	380.04	1-3	0
1	2	SC_CARRIL_1	LinMoving	Max M3	-5.25	-374.78	0.23	1227.00	0.20	567.23	1-4	0
1	3	SC_CARRIL_1	LinMoving	Max M3	-5.26	-347.78	0.22	1159.53	-0.02	915.03	1-5	0
1	4	SC_CARRIL_1	LinMoving	Max M3	-5.26	-320.78	0.22	1092.05	-0.25	1235.84	1-6	0
1	5	SC_CARRIL_1	LinMoving	Max M3	-5.26	-293.78	0.22	1024.56	-0.47	1529.64	1-7	0
1	6	SC_CARRIL_1	LinMoving	Max M3	-5.26	-266.78	0.22	957.07	-0.70	1796.45	1-8	0
1	7	SC_CARRIL_1	LinMoving	Max M3	-5.26	-239.78	0.22	889.57	-0.92	2036.25	1-9	0
1	8	SC_CARRIL_1	LinMoving	Max M3	-5.26	-212.78	0.22	822.08	-1.14	2249.06	1-10	0
1	9	SC_CARRIL_1	LinMoving	Max M3	-5.26	-185.79	0.22	754.58	-1.37	2434.86	1-11	0
1	10	SC_CARRIL_1	LinMoving	Max M3	-5.26	-158.79	0.22	687.09	-1.59	2593.67	1-12	0
1	11	SC_CARRIL_1	LinMoving	Max M3	-5.26	-131.79	0.22	619.59	-1.82	2725.48	1-13	0
1	12	SC_CARRIL_1	LinMoving	Max M3	-5.26	-104.79	0.22	552.10	-2.04	2830.28	1-14	0
1	13	SC_CARRIL_1	LinMoving	Max M3	-5.26	-77.79	0.22	484.60	-2.26	2908.09	1-15	0
1	14	SC_CARRIL_1	LinMoving	Max M3	-5.26	-50.79	0.22	417.10	-2.49	2958.89	1-16	0
1	15	SC_CARRIL_1	LinMoving	Max M3	-5.26	-23.79	0.22	349.61	-2.71	2982.70	1-17	0
1	16	SC_CARRIL_1	LinMoving	Max M3	-5.26	3.21	0.22	282.11	-2.94	2979.51	1-18	0
1	17	SC_CARRIL_1	LinMoving	Max M3	-5.26	30.21	0.22	214.62	-3.16	2949.31	1-19	0
1	18	SC_CARRIL_1	LinMoving	Max M3	-5.26	57.21	0.22	147.12	-3.39	2892.12	1-20	0
1	19	SC_CARRIL_1	LinMoving	Max M3	-5.26	84.21	0.22	79.63	-3.61	2807.93	1-21	0
1	20	SC_CARRIL_1	LinMoving	Max M3	-5.26	111.21	0.22	12.13	-3.83	2696.73	1-22	0
1	21	SC_CARRIL_1	LinMoving	Max M3	-5.26	138.21	0.22	-55.36	-4.06	2558.54	1-23	0
1	22	SC_CARRIL_1	LinMoving	Max M3	-5.26	165.20	0.22	-122.85	-4.28	2393.34	1-24	0
1	23	SC_CARRIL_1	LinMoving	Max M3	-5.26	192.20	0.22	-190.34	-4.51	2201.15	1-25	0
1	24	SC_CARRIL_1	LinMoving	Max M3	-5.26	219.20	0.22	-257.82	-4.73	1981.96	1-26	0
1	25	SC_CARRIL_1	LinMoving	Max M3	-5.26	246.20	0.22	-325.29	-4.96	1735.77	1-27	0
1	26	SC_CARRIL_1	LinMoving	Max M3	-5.26	273.20	0.22	-392.73	-5.19	1462.57	1-28	0
1	27	SC_CARRIL_1	LinMoving	Max M3	-5.24	300.17	0.23	-459.99	-5.42	1162.39	1-29	0
1	28	SC_CARRIL_1	LinMoving	Max M3	-3.83	293.40	0.23	-464.52	-5.97	841.31	1-30	0
1	29	SC_CARRIL_1	LinMoving	Max M3	-2.02	225.04	0.20	-360.24	-5.42	569.33	1-31	0
1	30	SC_CARRIL_1	LinMoving	Max M3	-1.08	165.83	0.16	-267.78	-4.57	361.14	1-32	0
1	31	SC_CARRIL_1	LinMoving	Max M3	-0.56	114.90	0.12	-186.15	-3.62	208.01	1-33	0
1	32	SC_CARRIL_1	LinMoving	Max M3	-0.28	84.66	0.09	-147.75	-2.61	102.15	1-34	0
1	33	SC_CARRIL_1	LinMoving	Max M3	-0.13	47.20	0.05	-84.03	-1.57	36.77	1-35	0
1	33.75	SC_CARRIL_1	LinMoving	Max M3	-0.08	16.19	0.02	-24.76	-0.77	8.07	1-36	0
1	34.5	SC_CARRIL_1	LinMoving	Max M3	-0.07	0.15	0.00	0.59	0.11	1.51	1-37	0
1	35.25	SC_CARRIL_1	LinMoving	Max M3	-0.08	-16.19	-0.02	24.76	-0.77	8.07	1-38	0
1	36	SC_CARRIL_1	LinMoving	Max M3	-0.13	-47.20	-0.05	84.03	-1.57	36.77	1-39	0
1	37	SC_CARRIL_1	LinMoving	Max M3	-0.28	-71.16	-0.09	114.00	-2.61	102.15	1-40	0
1	38	SC_CARRIL_1	LinMoving	Max M3	-0.56	-114.90	-0.12	186.15	-3.62	208.01	1-41	0
1	39	SC_CARRIL_1	LinMoving	Max M3	-1.08	-165.83	-0.16	267.78	-4.57	361.14	1-42	0
1	40	SC_CARRIL_1	LinMoving	Max M3	-2.02	-225.04	-0.20	360.24	-5.42	569.33	1-43	0
1	41	SC_CARRIL_1	LinMoving	Max M3	-3.83	-293.40	-0.23	464.52	-5.97	841.31	1-44	0
1	42	SC_CARRIL_1	LinMoving	Max M3	-5.24	-300.17	-0.22	459.99	-5.42	1162.39	1-45	0

ESTRUCTURA E1. ESFUERZOS EN TABLERO PARA TODOS LOS CASOS E HIPOTESIS DE CARGA

Frame	Station	OutputCase	CaseType	StepType	P	V2	V3	T	M2	M3	FrameElem	ElemStation
Text	m	Text	Text	Text	KN	KN	KN	KN-m	KN-m	KN-m	Text	m
1	43	SC_CARRIL_1	LinMoving	Max M3	-5.26	-273.20	-0.22	392.72	-5.18	1462.58	1-46	0
1	44	SC_CARRIL_1	LinMoving	Max M3	-5.26	-246.20	-0.22	325.29	-4.95	1735.77	1-47	0
1	45	SC_CARRIL_1	LinMoving	Max M3	-5.26	-219.20	-0.22	257.81	-4.73	1981.96	1-48	0
1	46	SC_CARRIL_1	LinMoving	Max M3	-5.26	-192.20	-0.22	190.33	-4.50	2201.15	1-49	0
1	47	SC_CARRIL_1	LinMoving	Max M3	-5.26	-165.20	-0.22	122.84	-4.28	2393.35	1-50	0
1	48	SC_CARRIL_1	LinMoving	Max M3	-5.26	-138.21	-0.22	55.35	-4.05	2558.54	1-51	0
1	49	SC_CARRIL_1	LinMoving	Max M3	-5.26	-111.21	-0.22	-12.14	-3.83	2696.73	1-52	0
1	50	SC_CARRIL_1	LinMoving	Max M3	-5.26	-84.21	-0.22	-79.63	-3.61	2807.93	1-53	0
1	51	SC_CARRIL_1	LinMoving	Max M3	-5.26	-57.21	-0.22	-147.13	-3.38	2892.12	1-54	0
1	52	SC_CARRIL_1	LinMoving	Max M3	-5.26	-30.21	-0.22	-214.62	-3.16	2949.31	1-55	0
1	53	SC_CARRIL_1	LinMoving	Max M3	-5.26	-3.21	-0.22	-282.12	-2.93	2979.51	1-56	0
1	54	SC_CARRIL_1	LinMoving	Max M3	-5.26	23.79	-0.22	-349.61	-2.71	2982.70	1-57	0
1	55	SC_CARRIL_1	LinMoving	Max M3	-5.26	50.79	-0.22	-417.11	-2.49	2958.90	1-58	0
1	56	SC_CARRIL_1	LinMoving	Max M3	-5.26	77.79	-0.22	-484.60	-2.26	2908.09	1-59	0
1	57	SC_CARRIL_1	LinMoving	Max M3	-5.26	104.79	-0.22	-552.10	-2.04	2830.28	1-60	0
1	58	SC_CARRIL_1	LinMoving	Max M3	-5.26	131.79	-0.22	-619.60	-1.81	2725.48	1-61	0
1	59	SC_CARRIL_1	LinMoving	Max M3	-5.26	158.79	-0.22	-687.09	-1.59	2593.67	1-62	0
1	60	SC_CARRIL_1	LinMoving	Max M3	-5.26	185.79	-0.22	-754.59	-1.37	2434.86	1-63	0
1	61	SC_CARRIL_1	LinMoving	Max M3	-5.26	212.78	-0.22	-822.08	-1.14	2249.06	1-64	0
1	62	SC_CARRIL_1	LinMoving	Max M3	-5.26	239.78	-0.22	-889.58	-0.92	2036.25	1-65	0
1	63	SC_CARRIL_1	LinMoving	Max M3	-5.26	266.78	-0.22	-957.07	-0.69	1796.45	1-66	0
1	64	SC_CARRIL_1	LinMoving	Max M3	-5.26	293.78	-0.22	-1024.56	-0.47	1529.64	1-67	0
1	65	SC_CARRIL_1	LinMoving	Max M3	-5.26	320.78	-0.22	-1092.05	-0.25	1235.84	1-68	0
1	66	SC_CARRIL_1	LinMoving	Max M3	-5.26	347.78	-0.22	-1159.54	-0.02	915.03	1-69	0
1	67	SC_CARRIL_1	LinMoving	Max M3	-5.25	374.78	-0.22	-1227.01	0.20	567.42	1-70	0
1	67.5	SC_CARRIL_1	LinMoving	Max M3	-5.25	374.77	-0.23	-1227.00	0.31	380.40	1-71	0
1	68.5	SC_CARRIL_1	LinMoving	Max M3	0.00	0.00	0.00	0.00	0.00	0.00	1-72	0
1	0	SC_CARRIL_1	LinMoving	Min M3	0.00	0.00	0.00	0.00	0.00	0.00	1-1	0
1	0.5	SC_CARRIL_1	LinMoving	Min M3	-6.68	-362.64	0.29	1368.80	0.63	-12.50	1-2	0
1	1.5	SC_CARRIL_1	LinMoving	Min M3	-1.28	57.10	0.21	162.88	-0.07	-61.65	1-3	0
1	2	SC_CARRIL_1	LinMoving	Min M3	-1.27	57.10	0.21	162.84	-0.17	-90.24	1-4	0
1	3	SC_CARRIL_1	LinMoving	Min M3	-1.27	57.10	0.21	162.81	-0.38	-147.34	1-5	0
1	4	SC_CARRIL_1	LinMoving	Min M3	-1.27	57.10	0.21	162.79	-0.59	-204.45	1-6	0
1	5	SC_CARRIL_1	LinMoving	Min M3	-1.26	57.10	0.21	162.78	-0.80	-261.55	1-7	0
1	6	SC_CARRIL_1	LinMoving	Min M3	-1.26	57.10	0.21	162.78	-1.01	-318.65	1-8	0
1	7	SC_CARRIL_1	LinMoving	Min M3	-1.26	57.10	0.21	162.77	-1.22	-375.75	1-9	0
1	8	SC_CARRIL_1	LinMoving	Min M3	-1.26	57.10	0.21	162.77	-1.43	-432.86	1-10	0
1	9	SC_CARRIL_1	LinMoving	Min M3	-1.26	57.10	0.21	162.77	-1.64	-489.96	1-11	0
1	10	SC_CARRIL_1	LinMoving	Min M3	-1.26	57.10	0.21	162.76	-1.85	-547.06	1-12	0
1	11	SC_CARRIL_1	LinMoving	Min M3	-1.26	57.10	0.21	162.76	-2.06	-604.17	1-13	0
1	12	SC_CARRIL_1	LinMoving	Min M3	-1.26	57.10	0.21	162.76	-2.27	-661.27	1-14	0
1	13	SC_CARRIL_1	LinMoving	Min M3	-1.26	57.10	0.21	162.76	-2.48	-718.37	1-15	0
1	14	SC_CARRIL_1	LinMoving	Min M3	-1.26	57.10	0.21	162.76	-2.69	-775.48	1-16	0
1	15	SC_CARRIL_1	LinMoving	Min M3	-1.26	57.10	0.21	162.75	-2.90	-832.58	1-17	0
1	16	SC_CARRIL_1	LinMoving	Min M3	-1.26	57.10	0.21	162.75	-3.11	-889.68	1-18	0
1	17	SC_CARRIL_1	LinMoving	Min M3	-1.26	57.10	0.21	162.75	-3.32	-946.78	1-19	0
1	18	SC_CARRIL_1	LinMoving	Min M3	-1.26	57.10	0.21	162.75	-3.53	-1003.89	1-20	0
1	19	SC_CARRIL_1	LinMoving	Min M3	-1.26	57.10	0.21	162.74	-3.74	-1060.99	1-21	0
1	20	SC_CARRIL_1	LinMoving	Min M3	-1.26	57.10	0.21	162.74	-3.95	-1118.09	1-22	0
1	21	SC_CARRIL_1	LinMoving	Min M3	-1.26	57.10	0.21	162.73	-4.16	-1175.20	1-23	0
1	22	SC_CARRIL_1	LinMoving	Min M3	-1.26	57.10	0.21	162.72	-4.37	-1231.30	1-24	0
1	23	SC_CARRIL_1	LinMoving	Min M3	-1.26	57.10	0.21	162.71	-4.58	-1289.40	1-25	0
1	24	SC_CARRIL_1	LinMoving	Min M3	-1.27	57.10	0.21	162.70	-4.79	-1346.51	1-26	0
1	25	SC_CARRIL_1	LinMoving	Min M3	-1.27	57.11	0.21	162.67	-5.00	-1403.61	1-27	0
1	26	SC_CARRIL_1	LinMoving	Min M3	-1.27	57.11	0.21	162.61	-5.21	-1460.72	1-28	0
1	27	SC_CARRIL_1	LinMoving	Min M3	-1.28	57.13	0.21	162.38	-5.41	-1517.83	1-29	0
1	28	SC_CARRIL_1	LinMoving	Min M3	-2.69	90.91	0.21	99.41	-5.29	-1581.05	1-30	0
1	29	SC_CARRIL_1	LinMoving	Min M3	-4.51	186.27	0.24	-72.37	-6.28	-1720.37	1-31	0
1	30	SC_CARRIL_1	LinMoving	Min M3	-5.44	272.48	0.28	-232.33	-7.56	-1950.47	1-32	0
1	31	SC_CARRIL_1	LinMoving	Min M3	-5.96	350.40	0.31	-381.46	-8.94	-2261.63	1-33	0
1	32	SC_CARRIL_1	LinMoving	Min M3	-6.25	421.14	0.35	-521.10	-10.39	-2649.08	1-34	0
1	33	SC_CARRIL_1	LinMoving	Min M3	-6.39	485.60	0.39	-652.30	-11.87	-3103.75	1-35	0
1	33.75	SC_CARRIL_1	LinMoving	Min M3	-6.44	530.11	0.41	-745.32	-12.99	-3483.77	1-36	0
1	34.5	SC_CARRIL_1	LinMoving	Min M3	-6.46	-573.44	-0.44	836.99	-14.20	-3903.43	1-37	0
1	35.25	SC_CARRIL_1	LinMoving	Min M3	-6.44	-530.11	-0.41	745.32	-12.99	-3483.77	1-38	0
1	36	SC_CARRIL_1	LinMoving	Min M3	-6.39	-485.60	-0.39	652.32	-11.87	-3103.99	1-39	0
1	37	SC_CARRIL_1	LinMoving	Min M3	-6.25	-421.14	-0.35	521.10	-10.39	-2649.08	1-40	0
1	38	SC_CARRIL_1	LinMoving	Min M3	-5.96	-350.40	-0.31	381.46	-8.94	-2261.63	1-41	0
1	39	SC_CARRIL_1	LinMoving	Min M3	-5.44	-272.48	-0.28	232.32	-7.56	-1950.47	1-42	0
1	40	SC_CARRIL_1	LinMoving	Min M3	-4.51	-186.27	-0.24	72.36	-6.28	-1720.37	1-43	0
1	41	SC_CARRIL_1	LinMoving	Min M3	-2.69	-90.91	-0.21	-99.41	-5.29	-1581.05	1-44	0
1	42	SC_CARRIL_1	LinMoving	Min M3	-1.28	-57.13	-0.21	-162.38	-5.41	-1517.83	1-45	0
1	43	SC_CARRIL_1	LinMoving	Min M3	-1.27	-57.11	-0.21	-162.61	-5.21	-1460.72	1-46	0
1	44	SC_CARRIL_1	LinMoving	Min M3	-1.27	-57.11	-0.21	-162.67	-5.01	-1403.61	1-47	0
1	45	SC_CARRIL_1	LinMoving	Min M3	-1.27	-57.10	-0.21	-162.70	-4.80	-1346.51	1-48	0
1	46	SC_CARRIL_1	LinMoving	Min M3	-1.26	-57.10	-0.21	-162.71	-4.59	-1289.40	1-49	0
1	47	SC_CARRIL_1	LinMoving	Min M3	-1.26	-57.10	-0.21	-162.73	-4.38	-1231.30	1-50	0
1	48	SC_CARRIL_1	LinMoving	Min M3	-1.26	-57.10	-0.21	-162.73	-4.17	-1175.20	1-51	0
1	49	SC_CARRIL_1	LinMoving	Min M3	-1.26	-57.10	-0.21	-162.74	-3.96	-1118.09	1-52	0
1	50	SC_CARRIL_1	LinMoving	Min M3	-1.26	-57.10	-0.21	-162.74	-3.75	-1060.99	1-53	0
1	51	SC_CARRIL_1	LinMoving	Min M3	-1.26	-57.10	-0.21	-162.75	-3.54	-1003.89	1-54	0

ESTRUCTURA E1. ESFUERZOS EN TABLERO PARA TODOS LOS CASOS E HIPOTESIS DE CARGA

Frame	Station	OutputCase	CaseType	StepType	P	V2	V3	T	M2	M3	FrameElem	ElemStation
Text	m	Text	Text	Text	KN	KN	KN	KN-m	KN-m	KN-m	Text	m
1	52	SC_CARRIL_1	LinMoving	Min M3	-1.26	-57.10	-0.21	-162.75	-3.33	-946.78	1-55	0
1	53	SC_CARRIL_1	LinMoving	Min M3	-1.26	-57.10	-0.21	-162.75	-3.12	-889.68	1-56	0
1	54	SC_CARRIL_1	LinMoving	Min M3	-1.26	-57.10	-0.21	-162.75	-2.91	-832.58	1-57	0
1	55	SC_CARRIL_1	LinMoving	Min M3	-1.26	-57.10	-0.21	-162.76	-2.70	-775.48	1-58	0
1	56	SC_CARRIL_1	LinMoving	Min M3	-1.26	-57.10	-0.21	-162.76	-2.49	-718.37	1-59	0
1	57	SC_CARRIL_1	LinMoving	Min M3	-1.26	-57.10	-0.21	-162.76	-2.28	-661.27	1-60	0
1	58	SC_CARRIL_1	LinMoving	Min M3	-1.26	-57.10	-0.21	-162.76	-2.07	-604.17	1-61	0
1	59	SC_CARRIL_1	LinMoving	Min M3	-1.26	-57.10	-0.21	-162.77	-1.86	-547.06	1-62	0
1	60	SC_CARRIL_1	LinMoving	Min M3	-1.26	-57.10	-0.21	-162.77	-1.65	-489.96	1-63	0
1	61	SC_CARRIL_1	LinMoving	Min M3	-1.26	-57.10	-0.21	-162.77	-1.43	-432.86	1-64	0
1	62	SC_CARRIL_1	LinMoving	Min M3	-1.26	-57.10	-0.21	-162.77	-1.22	-375.75	1-65	0
1	63	SC_CARRIL_1	LinMoving	Min M3	-1.26	-57.10	-0.21	-162.78	-1.01	-318.65	1-66	0
1	64	SC_CARRIL_1	LinMoving	Min M3	-1.26	-57.10	-0.21	-162.78	-0.80	-261.55	1-67	0
1	65	SC_CARRIL_1	LinMoving	Min M3	-1.27	-57.10	-0.21	-162.79	-0.59	-204.45	1-68	0
1	66	SC_CARRIL_1	LinMoving	Min M3	-1.27	-57.10	-0.21	-162.81	-0.38	-147.34	1-69	0
1	67	SC_CARRIL_1	LinMoving	Min M3	-1.27	-57.10	-0.21	-162.85	-0.17	-90.19	1-70	0
1	67.5	SC_CARRIL_1	LinMoving	Min M3	-1.27	-57.10	-0.21	-162.89	-0.07	-61.56	1-71	0
1	68.5	SC_CARRIL_1	LinMoving	Min M3	0.00	-13.50	0.00	33.75	0.00	-6.74	1-72	0
1	0	VP_CARRIL_1	LinMoving	Max P	0.00	0.00	0.00	0.00	0.00	0.00	1-1	0
1	0.5	VP_CARRIL_1	LinMoving	Max P	0.47	35.00	0.30	180.85	0.10	0.40	1-2	0
1	1.5	VP_CARRIL_1	LinMoving	Max P	0.47	35.00	0.30	180.83	-0.19	-34.57	1-3	0
1	2	VP_CARRIL_1	LinMoving	Max P	0.47	35.00	0.30	180.82	-0.34	-52.05	1-4	0
1	3	VP_CARRIL_1	LinMoving	Max P	0.47	35.00	0.30	180.82	-0.64	-87.05	1-5	0
1	4	VP_CARRIL_1	LinMoving	Max P	0.47	35.00	0.30	180.82	-0.93	-122.06	1-6	0
1	5	VP_CARRIL_1	LinMoving	Max P	0.47	35.00	0.30	180.82	-1.23	-157.06	1-7	0
1	6	VP_CARRIL_1	LinMoving	Max P	0.47	35.00	0.30	180.82	-1.52	-192.06	1-8	0
1	7	VP_CARRIL_1	LinMoving	Max P	0.47	35.00	0.30	180.82	-1.81	-227.06	1-9	0
1	8	VP_CARRIL_1	LinMoving	Max P	0.47	35.00	0.30	180.82	-2.11	-262.06	1-10	0
1	9	VP_CARRIL_1	LinMoving	Max P	0.47	35.00	0.30	180.82	-2.40	-297.06	1-11	0
1	10	VP_CARRIL_1	LinMoving	Max P	0.47	35.00	0.30	180.82	-2.70	-332.07	1-12	0
1	11	VP_CARRIL_1	LinMoving	Max P	0.47	35.00	0.30	180.82	-2.99	-367.07	1-13	0
1	12	VP_CARRIL_1	LinMoving	Max P	0.47	35.00	0.30	180.82	-3.29	-402.07	1-14	0
1	13	VP_CARRIL_1	LinMoving	Max P	0.47	35.00	0.30	180.82	-3.58	-437.07	1-15	0
1	14	VP_CARRIL_1	LinMoving	Max P	0.47	35.00	0.30	180.82	-3.88	-472.07	1-16	0
1	15	VP_CARRIL_1	LinMoving	Max P	0.47	35.00	0.30	180.82	-4.17	-507.08	1-17	0
1	16	VP_CARRIL_1	LinMoving	Max P	0.47	35.00	0.30	180.82	-4.46	-542.08	1-18	0
1	17	VP_CARRIL_1	LinMoving	Max P	0.47	35.00	0.30	180.82	-4.76	-577.08	1-19	0
1	18	VP_CARRIL_1	LinMoving	Max P	0.47	35.00	0.30	180.82	-5.05	-612.08	1-20	0
1	19	VP_CARRIL_1	LinMoving	Max P	0.47	35.00	0.30	180.82	-5.35	-647.08	1-21	0
1	20	VP_CARRIL_1	LinMoving	Max P	0.47	35.00	0.30	180.82	-5.64	-682.08	1-22	0
1	21	VP_CARRIL_1	LinMoving	Max P	0.47	35.00	0.30	180.82	-5.94	-717.09	1-23	0
1	22	VP_CARRIL_1	LinMoving	Max P	0.47	35.00	0.30	180.82	-6.23	-752.09	1-24	0
1	23	VP_CARRIL_1	LinMoving	Max P	0.47	35.00	0.30	180.82	-6.53	-787.09	1-25	0
1	24	VP_CARRIL_1	LinMoving	Max P	0.47	35.00	0.30	180.82	-6.82	-822.09	1-26	0
1	25	VP_CARRIL_1	LinMoving	Max P	0.47	35.00	0.30	180.82	-7.12	-857.09	1-27	0
1	26	VP_CARRIL_1	LinMoving	Max P	0.47	35.00	0.30	180.82	-7.41	-892.10	1-28	0
1	27	VP_CARRIL_1	LinMoving	Max P	0.47	35.00	0.30	180.82	-7.70	-927.10	1-29	0
1	28	VP_CARRIL_1	LinMoving	Max P	0.47	35.00	0.30	180.82	-8.00	-962.10	1-30	0
1	29	VP_CARRIL_1	LinMoving	Max P	0.47	35.00	0.30	180.82	-8.29	-997.10	1-31	0
1	30	VP_CARRIL_1	LinMoving	Max P	0.47	35.00	0.30	180.82	-8.59	-1032.10	1-32	0
1	31	VP_CARRIL_1	LinMoving	Max P	0.47	35.00	0.30	180.82	-8.88	-1067.10	1-33	0
1	32	VP_CARRIL_1	LinMoving	Max P	0.47	35.00	0.30	180.82	-9.18	-1102.11	1-34	0
1	33	VP_CARRIL_1	LinMoving	Max P	0.47	35.00	0.30	180.83	-9.47	-1137.13	1-35	0
1	33.75	VP_CARRIL_1	LinMoving	Max P	0.47	35.00	0.30	180.83	-9.69	-1163.38	1-36	0
1	34.5	VP_CARRIL_1	LinMoving	Max P	0.47	-35.00	-0.30	-180.83	-9.91	-1189.63	1-37	0
1	35.25	VP_CARRIL_1	LinMoving	Max P	0.47	-35.00	-0.30	-180.83	-9.69	-1163.38	1-38	0
1	36	VP_CARRIL_1	LinMoving	Max P	0.47	-35.00	-0.30	-180.82	-9.47	-1137.11	1-39	0
1	37	VP_CARRIL_1	LinMoving	Max P	0.47	-35.00	-0.30	-180.82	-9.18	-1102.11	1-40	0
1	38	VP_CARRIL_1	LinMoving	Max P	0.47	-35.00	-0.30	-180.82	-8.88	-1067.10	1-41	0
1	39	VP_CARRIL_1	LinMoving	Max P	0.47	-35.00	-0.30	-180.82	-8.59	-1032.10	1-42	0
1	40	VP_CARRIL_1	LinMoving	Max P	0.47	-35.00	-0.30	-180.82	-8.29	-997.10	1-43	0
1	41	VP_CARRIL_1	LinMoving	Max P	0.47	-35.00	-0.30	-180.82	-8.00	-962.10	1-44	0
1	42	VP_CARRIL_1	LinMoving	Max P	0.47	-35.00	-0.30	-180.82	-7.71	-927.10	1-45	0
1	43	VP_CARRIL_1	LinMoving	Max P	0.47	-35.00	-0.30	-180.82	-7.41	-892.10	1-46	0
1	44	VP_CARRIL_1	LinMoving	Max P	0.47	-35.00	-0.30	-180.82	-7.12	-857.09	1-47	0
1	45	VP_CARRIL_1	LinMoving	Max P	0.47	-35.00	-0.30	-180.82	-6.82	-822.09	1-48	0
1	46	VP_CARRIL_1	LinMoving	Max P	0.47	-35.00	-0.30	-180.82	-6.53	-787.09	1-49	0
1	47	VP_CARRIL_1	LinMoving	Max P	0.47	-35.00	-0.30	-180.82	-6.23	-752.09	1-50	0
1	48	VP_CARRIL_1	LinMoving	Max P	0.47	-35.00	-0.30	-180.82	-5.94	-717.09	1-51	0
1	49	VP_CARRIL_1	LinMoving	Max P	0.47	-35.00	-0.30	-180.82	-5.64	-682.08	1-52	0
1	50	VP_CARRIL_1	LinMoving	Max P	0.47	-35.00	-0.30	-180.82	-5.35	-647.08	1-53	0
1	51	VP_CARRIL_1	LinMoving	Max P	0.47	-35.00	-0.30	-180.82	-5.05	-612.08	1-54	0
1	52	VP_CARRIL_1	LinMoving	Max P	0.47	-35.00	-0.30	-180.82	-4.76	-577.08	1-55	0
1	53	VP_CARRIL_1	LinMoving	Max P	0.47	-35.00	-0.30	-180.82	-4.47	-542.08	1-56	0
1	54	VP_CARRIL_1	LinMoving	Max P	0.47	-35.00	-0.30	-180.82	-4.17	-507.08	1-57	0
1	55	VP_CARRIL_1	LinMoving	Max P	0.47	-35.00	-0.30	-180.82	-3.88	-472.07	1-58	0
1	56	VP_CARRIL_1	LinMoving	Max P	0.47	-35.00	-0.30	-180.82	-3.58	-437.07	1-59	0
1	57	VP_CARRIL_1	LinMoving	Max P	0.47	-35.00	-0.30	-180.82	-3.29	-402.07	1-60	0
1	58	VP_CARRIL_1	LinMoving	Max P	0.47	-35.00	-0.30	-180.82	-2.99	-367.07	1-61	0
1	59	VP_CARRIL_1	LinMoving	Max P	0.47	-35.00	-0.30	-180.82	-2.70	-332.07	1-62	0
1	60	VP_CARRIL_1	LinMoving	Max P	0.47	-35.00	-0.30	-180.82	-2.40	-297.06	1-63	0

ESTRUCTURA E1. ESFUERZOS EN TABLERO PARA TODOS LOS CASOS E HIPOTESIS DE CARGA

Frame	Station	OutputCase	CaseType	StepType	P	V2	V3	T	M2	M3	FrameElem	ElemStation
Text	m	Text	Text	Text	KN	KN	KN	KN-m	KN-m	KN-m	Text	m
1	61	VP_CARRIL_1	LinMoving	Max P	0.47	-35.00	-0.30	-180.82	-2.11	-262.06	1-64	0
1	62	VP_CARRIL_1	LinMoving	Max P	0.47	-35.00	-0.30	-180.82	-1.81	-227.06	1-65	0
1	63	VP_CARRIL_1	LinMoving	Max P	0.47	-35.00	-0.30	-180.82	-1.52	-192.06	1-66	0
1	64	VP_CARRIL_1	LinMoving	Max P	0.47	-35.00	-0.30	-180.82	-1.23	-157.06	1-67	0
1	65	VP_CARRIL_1	LinMoving	Max P	0.47	-35.00	-0.30	-180.82	-0.93	-122.06	1-68	0
1	66	VP_CARRIL_1	LinMoving	Max P	0.47	-35.00	-0.30	-180.82	-0.64	-87.05	1-69	0
1	67	VP_CARRIL_1	LinMoving	Max P	0.47	-35.00	-0.30	-180.83	-0.34	-52.07	1-70	0
1	67.5	VP_CARRIL_1	LinMoving	Max P	0.47	-35.00	-0.30	-180.85	-0.19	-34.50	1-71	0
1	68.5	VP_CARRIL_1	LinMoving	Max P	0.00	0.00	0.00	0.00	0.00	0.00	1-72	0
1	0	VP_CARRIL_1	LinMoving	Min P	0.00	0.00	0.00	0.00	0.00	0.00	1-1	0
1	0.5	VP_CARRIL_1	LinMoving	Min P	-5.22	-360.39	0.07	1068.66	0.44	-4.50	1-2	0
1	1.5	VP_CARRIL_1	LinMoving	Min P	-5.22	-360.39	0.07	1068.66	0.36	355.53	1-3	0
1	2	VP_CARRIL_1	LinMoving	Min P	-5.22	-360.39	0.07	1068.66	0.33	535.53	1-4	0
1	3	VP_CARRIL_1	LinMoving	Min P	-5.22	-360.39	0.07	1068.66	0.25	895.92	1-5	0
1	4	VP_CARRIL_1	LinMoving	Min P	-5.22	-360.39	0.07	1068.66	0.18	1256.31	1-6	0
1	5	VP_CARRIL_1	LinMoving	Min P	-5.22	-360.39	0.07	1068.66	0.11	1616.70	1-7	0
1	6	VP_CARRIL_1	LinMoving	Min P	-5.22	-360.39	0.07	1068.66	0.04	1977.09	1-8	0
1	7	VP_CARRIL_1	LinMoving	Min P	-5.22	-360.39	0.07	1068.66	-0.03	2337.48	1-9	0
1	8	VP_CARRIL_1	LinMoving	Min P	-5.22	-360.39	0.07	1068.66	-0.11	2697.88	1-10	0
1	9	VP_CARRIL_1	LinMoving	Min P	-5.22	-360.39	0.07	1068.66	-0.18	3058.27	1-11	0
1	10	VP_CARRIL_1	LinMoving	Min P	-5.22	-360.39	0.07	1068.66	-0.25	3418.66	1-12	0
1	11	VP_CARRIL_1	LinMoving	Min P	-5.22	-360.39	0.07	1068.66	-0.32	3779.05	1-13	0
1	12	VP_CARRIL_1	LinMoving	Min P	-5.22	-60.39	0.07	318.66	-0.40	3839.64	1-14	0
1	13	VP_CARRIL_1	LinMoving	Min P	-5.22	179.60	0.07	-281.32	-0.47	3660.20	1-15	0
1	14	VP_CARRIL_1	LinMoving	Min P	-5.22	239.61	0.07	-431.34	-0.54	3420.63	1-16	0
1	15	VP_CARRIL_1	LinMoving	Min P	-5.22	239.61	0.07	-431.34	-0.61	3181.02	1-17	0
1	16	VP_CARRIL_1	LinMoving	Min P	-5.22	239.61	0.07	-431.34	-0.69	2941.41	1-18	0
1	17	VP_CARRIL_1	LinMoving	Min P	-5.22	239.61	0.07	-431.34	-0.76	2701.80	1-19	0
1	18	VP_CARRIL_1	LinMoving	Min P	-5.22	239.61	0.07	-431.34	-0.83	2462.19	1-20	0
1	19	VP_CARRIL_1	LinMoving	Min P	-5.22	239.61	0.07	-431.34	-0.90	2222.58	1-21	0
1	20	VP_CARRIL_1	LinMoving	Min P	-5.22	239.61	0.07	-431.34	-0.98	1982.97	1-22	0
1	21	VP_CARRIL_1	LinMoving	Min P	-5.22	239.61	0.07	-431.34	-1.05	1743.36	1-23	0
1	22	VP_CARRIL_1	LinMoving	Min P	-5.22	239.61	0.07	-431.34	-1.12	1503.76	1-24	0
1	23	VP_CARRIL_1	LinMoving	Min P	-5.22	239.61	0.07	-431.34	-1.19	1264.15	1-25	0
1	24	VP_CARRIL_1	LinMoving	Min P	-5.22	239.61	0.07	-431.34	-1.27	1024.54	1-26	0
1	25	VP_CARRIL_1	LinMoving	Min P	-5.22	239.61	0.07	-431.34	-1.34	784.93	1-27	0
1	26	VP_CARRIL_1	LinMoving	Min P	-5.22	239.61	0.07	-431.34	-1.41	545.32	1-28	0
1	27	VP_CARRIL_1	LinMoving	Min P	-5.22	239.61	0.07	-431.34	-1.48	305.71	1-29	0
1	28	VP_CARRIL_1	LinMoving	Min P	-5.22	239.61	0.07	-431.34	-1.55	66.10	1-30	0
1	29	VP_CARRIL_1	LinMoving	Min P	-5.22	239.61	0.07	-431.34	-1.63	-173.51	1-31	0
1	30	VP_CARRIL_1	LinMoving	Min P	-5.22	239.61	0.07	-431.34	-1.70	-413.12	1-32	0
1	31	VP_CARRIL_1	LinMoving	Min P	-5.22	239.61	0.07	-431.34	-1.77	-652.73	1-33	0
1	32	VP_CARRIL_1	LinMoving	Min P	-5.22	239.61	0.07	-431.34	-1.84	-892.34	1-34	0
1	33	VP_CARRIL_1	LinMoving	Min P	-5.22	239.61	0.07	-431.34	-1.92	-1131.75	1-35	0
1	33.75	VP_CARRIL_1	LinMoving	Min P	-5.22	239.61	0.07	-431.34	-1.97	-1311.46	1-36	0
1	34.5	VP_CARRIL_1	LinMoving	Min P	-5.22	-239.61	-0.07	431.34	-2.02	-1491.16	1-37	0
1	35.25	VP_CARRIL_1	LinMoving	Min P	-5.22	-239.61	-0.07	431.34	-1.96	-1311.45	1-38	0
1	36	VP_CARRIL_1	LinMoving	Min P	-5.22	-239.61	-0.07	431.34	-1.91	-1131.94	1-39	0
1	37	VP_CARRIL_1	LinMoving	Min P	-5.22	-239.61	-0.07	431.34	-1.84	-892.34	1-40	0
1	38	VP_CARRIL_1	LinMoving	Min P	-5.22	-239.61	-0.07	431.34	-1.77	-652.73	1-41	0
1	39	VP_CARRIL_1	LinMoving	Min P	-5.22	-239.61	-0.07	431.34	-1.69	-413.12	1-42	0
1	40	VP_CARRIL_1	LinMoving	Min P	-5.22	-239.61	-0.07	431.34	-1.62	-173.51	1-43	0
1	41	VP_CARRIL_1	LinMoving	Min P	-5.22	-239.61	-0.07	431.34	-1.55	66.10	1-44	0
1	42	VP_CARRIL_1	LinMoving	Min P	-5.22	-239.61	-0.07	431.34	-1.48	305.71	1-45	0
1	43	VP_CARRIL_1	LinMoving	Min P	-5.22	-239.61	-0.07	431.34	-1.40	545.32	1-46	0
1	44	VP_CARRIL_1	LinMoving	Min P	-5.22	-239.61	-0.07	431.34	-1.33	784.93	1-47	0
1	45	VP_CARRIL_1	LinMoving	Min P	-5.22	-239.61	-0.07	431.34	-1.26	1024.54	1-48	0
1	46	VP_CARRIL_1	LinMoving	Min P	-5.22	-239.61	-0.07	431.34	-1.19	1264.15	1-49	0
1	47	VP_CARRIL_1	LinMoving	Min P	-5.22	-239.61	-0.07	431.34	-1.12	1503.76	1-50	0
1	48	VP_CARRIL_1	LinMoving	Min P	-5.22	-239.61	-0.07	431.34	-1.04	1743.37	1-51	0
1	49	VP_CARRIL_1	LinMoving	Min P	-5.22	-239.61	-0.07	431.34	-0.97	1982.97	1-52	0
1	50	VP_CARRIL_1	LinMoving	Min P	-5.22	-239.61	-0.07	431.34	-0.90	2222.58	1-53	0
1	51	VP_CARRIL_1	LinMoving	Min P	-5.22	-239.61	-0.07	431.34	-0.83	2462.19	1-54	0
1	52	VP_CARRIL_1	LinMoving	Min P	-5.22	-239.61	-0.07	431.34	-0.76	2701.80	1-55	0
1	53	VP_CARRIL_1	LinMoving	Min P	-5.22	-239.61	-0.07	431.34	-0.68	2941.41	1-56	0
1	54	VP_CARRIL_1	LinMoving	Min P	-5.22	-239.61	-0.07	431.34	-0.61	3181.02	1-57	0
1	55	VP_CARRIL_1	LinMoving	Min P	-5.22	-239.61	-0.07	431.34	-0.54	3420.63	1-58	0
1	56	VP_CARRIL_1	LinMoving	Min P	-5.22	-179.60	-0.07	281.31	-0.47	3660.20	1-59	0
1	57	VP_CARRIL_1	LinMoving	Min P	-5.22	60.39	-0.07	-318.66	-0.39	3839.64	1-60	0
1	58	VP_CARRIL_1	LinMoving	Min P	-5.22	360.39	-0.07	-1068.66	-0.32	3779.05	1-61	0
1	59	VP_CARRIL_1	LinMoving	Min P	-5.22	360.39	-0.07	-1068.66	-0.25	3418.66	1-62	0
1	60	VP_CARRIL_1	LinMoving	Min P	-5.22	360.39	-0.07	-1068.66	-0.18	3058.27	1-63	0
1	61	VP_CARRIL_1	LinMoving	Min P	-5.22	360.39	-0.07	-1068.66	-0.11	2697.88	1-64	0
1	62	VP_CARRIL_1	LinMoving	Min P	-5.22	360.39	-0.07	-1068.66	-0.03	2337.48	1-65	0
1	63	VP_CARRIL_1	LinMoving	Min P	-5.22	360.39	-0.07	-1068.66	0.04	1977.09	1-66	0
1	64	VP_CARRIL_1	LinMoving	Min P	-5.22	360.39	-0.07	-1068.66	0.11	1616.70	1-67	0
1	65	VP_CARRIL_1	LinMoving	Min P	-5.22	360.39	-0.07	-1068.66	0.18	1256.31	1-68	0
1	66	VP_CARRIL_1	LinMoving	Min P	-5.22	360.39	-0.07	-1068.66	0.25	895.92	1-69	0
1	67	VP_CARRIL_1	LinMoving	Min P	-5.22	360.39	-0.07	-1068.66	0.33	535.73	1-70	0
1	67.5	VP_CARRIL_1	LinMoving	Min P	-5.22	360.39	-0.07	-1068.67	0.36	355.89	1-71	0
1	68.5	VP_CARRIL_1	LinMoving	Min P	0.00	0.00	0.00	0.00	0.00	0.00	1-72	0

ESTRUCTURA E1. ESFUERZOS EN TABLERO PARA TODOS LOS CASOS E HIPOTESIS DE CARGA

Frame	Station	OutputCase	CaseType	StepType	P	V2	V3	T	M2	M3	FrameElem	ElemStation
Text	m	Text	Text	Text	KN	KN	KN	KN-m	KN-m	KN-m	Text	m
1	0	VP_CARRIL_1	LinMoving	Max V2	0.00	0.00	0.00	0.00	0.00	0.00	1-1	0
1	0.5	VP_CARRIL_1	LinMoving	Max V2	-0.37	57.62	0.18	125.16	0.09	-0.32	1-2	0
1	1.5	VP_CARRIL_1	LinMoving	Max V2	-0.37	57.62	0.18	125.15	-0.09	-57.97	1-3	0
1	2	VP_CARRIL_1	LinMoving	Max V2	-0.37	57.62	0.18	125.14	-0.18	-86.30	1-4	0
1	3	VP_CARRIL_1	LinMoving	Max V2	-0.37	57.62	0.18	125.14	-0.35	-144.42	1-5	0
1	4	VP_CARRIL_1	LinMoving	Max V2	-0.37	57.62	0.18	125.14	-0.53	-202.04	1-6	0
1	5	VP_CARRIL_1	LinMoving	Max V2	-3.51	63.90	-0.03	-121.68	0.69	1449.60	1-7	0
1	6	VP_CARRIL_1	LinMoving	Max V2	-3.92	85.81	-0.02	-159.44	0.64	1864.75	1-8	0
1	7	VP_CARRIL_1	LinMoving	Max V2	-4.27	107.64	-0.01	-197.21	0.56	2236.69	1-9	0
1	8	VP_CARRIL_1	LinMoving	Max V2	-4.55	129.36	0.01	-234.97	0.46	2565.87	1-10	0
1	9	VP_CARRIL_1	LinMoving	Max V2	-4.79	150.94	0.02	-272.74	0.33	2852.80	1-11	0
1	10	VP_CARRIL_1	LinMoving	Max V2	-4.97	172.37	0.03	-310.50	0.18	3098.11	1-12	0
1	11	VP_CARRIL_1	LinMoving	Max V2	-5.10	193.62	0.05	-348.26	0.00	3302.51	1-13	0
1	12	VP_CARRIL_1	LinMoving	Max V2	-5.18	214.66	0.06	-386.03	-0.21	3466.81	1-14	0
1	13	VP_CARRIL_1	LinMoving	Max V2	-5.22	235.48	0.07	-423.79	-0.43	3591.89	1-15	0
1	14	VP_CARRIL_1	LinMoving	Max V2	-5.21	256.04	0.08	-461.55	-0.69	3678.75	1-16	0
1	15	VP_CARRIL_1	LinMoving	Max V2	-5.17	276.34	0.10	-499.32	-0.97	3728.48	1-17	0
1	16	VP_CARRIL_1	LinMoving	Max V2	-5.08	296.33	0.11	-537.08	-1.27	3742.25	1-18	0
1	17	VP_CARRIL_1	LinMoving	Max V2	-4.97	316.01	0.12	-574.84	-1.60	3721.32	1-19	0
1	18	VP_CARRIL_1	LinMoving	Max V2	-4.82	335.35	0.13	-612.61	-1.96	3667.06	1-20	0
1	19	VP_CARRIL_1	LinMoving	Max V2	-4.65	354.32	0.15	-650.37	-2.34	3580.92	1-21	0
1	20	VP_CARRIL_1	LinMoving	Max V2	-4.45	372.90	0.16	-688.14	-2.75	3464.45	1-22	0
1	21	VP_CARRIL_1	LinMoving	Max V2	-4.23	391.07	0.17	-725.90	-3.18	3319.29	1-23	0
1	22	VP_CARRIL_1	LinMoving	Max V2	-3.98	408.80	0.18	-763.66	-3.63	3147.16	1-24	0
1	23	VP_CARRIL_1	LinMoving	Max V2	-3.72	426.08	0.20	-801.43	-4.11	2949.89	1-25	0
1	24	VP_CARRIL_1	LinMoving	Max V2	-3.45	442.87	0.21	-839.19	-4.62	2729.40	1-26	0
1	25	VP_CARRIL_1	LinMoving	Max V2	-3.17	459.16	0.22	-876.95	-5.15	2487.70	1-27	0
1	26	VP_CARRIL_1	LinMoving	Max V2	-2.87	474.92	0.23	-914.72	-5.71	2226.88	1-28	0
1	27	VP_CARRIL_1	LinMoving	Max V2	-2.57	490.13	0.25	-952.48	-6.29	1949.15	1-29	0
1	28	VP_CARRIL_1	LinMoving	Max V2	-2.27	504.77	0.26	-990.24	-6.90	1656.79	1-30	0
1	29	VP_CARRIL_1	LinMoving	Max V2	-1.97	518.81	0.27	-1028.01	-7.53	1352.19	1-31	0
1	30	VP_CARRIL_1	LinMoving	Max V2	-1.67	532.23	0.28	-1065.77	-8.19	1037.80	1-32	0
1	31	VP_CARRIL_1	LinMoving	Max V2	-1.37	545.00	0.30	-1103.54	-8.87	716.20	1-33	0
1	32	VP_CARRIL_1	LinMoving	Max V2	-0.81	568.53	0.32	-1179.06	-9.99	630.63	1-34	0
1	33	VP_CARRIL_1	LinMoving	Max V2	-0.55	579.23	0.34	-1216.81	-10.74	314.45	1-35	0
1	33.75	VP_CARRIL_1	LinMoving	Max V2	-0.55	579.23	0.34	-1216.81	-10.99	-119.98	1-36	0
1	34.5	VP_CARRIL_1	LinMoving	Max V2	-0.83	5.46	0.03	15.42	1.30	35.21	1-37	0
1	35.25	VP_CARRIL_1	LinMoving	Max V2	-0.83	5.46	0.03	15.42	1.28	31.12	1-38	0
1	36	VP_CARRIL_1	LinMoving	Max V2	-0.26	8.88	-0.35	-242.15	-11.16	288.32	1-39	0
1	37	VP_CARRIL_1	LinMoving	Max V2	-0.50	18.71	-0.34	-276.11	-10.48	588.98	1-40	0
1	38	VP_CARRIL_1	LinMoving	Max V2	-0.76	29.28	-0.33	-313.38	-9.75	892.14	1-41	0
1	39	VP_CARRIL_1	LinMoving	Max V2	-1.03	40.55	-0.31	-351.15	-9.04	1195.28	1-42	0
1	40	VP_CARRIL_1	LinMoving	Max V2	-1.32	52.52	-0.30	-388.91	-8.35	1495.66	1-43	0
1	41	VP_CARRIL_1	LinMoving	Max V2	-1.61	65.17	-0.29	-426.68	-7.69	1790.54	1-44	0
1	42	VP_CARRIL_1	LinMoving	Max V2	-1.91	78.46	-0.27	-464.44	-7.06	2077.32	1-45	0
1	43	VP_CARRIL_1	LinMoving	Max V2	-2.21	92.38	-0.26	-502.20	-6.45	2353.45	1-46	0
1	44	VP_CARRIL_1	LinMoving	Max V2	-2.51	106.90	-0.25	-539.97	-5.86	2616.49	1-47	0
1	45	VP_CARRIL_1	LinMoving	Max V2	-2.81	121.99	-0.24	-577.73	-5.30	2864.10	1-48	0
1	46	VP_CARRIL_1	LinMoving	Max V2	-3.11	137.65	-0.22	-615.49	-4.77	3094.02	1-49	0
1	47	VP_CARRIL_1	LinMoving	Max V2	-3.40	153.83	-0.21	-653.26	-4.26	3304.09	1-50	0
1	48	VP_CARRIL_1	LinMoving	Max V2	-3.67	170.53	-0.20	-691.02	-3.77	3492.24	1-51	0
1	49	VP_CARRIL_1	LinMoving	Max V2	-3.93	187.71	-0.19	-728.79	-3.32	3656.49	1-52	0
1	50	VP_CARRIL_1	LinMoving	Max V2	-4.18	205.35	-0.17	-766.55	-2.88	3794.96	1-53	0
1	51	VP_CARRIL_1	LinMoving	Max V2	-4.41	223.44	-0.16	-804.31	-2.47	3905.85	1-54	0
1	52	VP_CARRIL_1	LinMoving	Max V2	-4.61	241.94	-0.15	-842.08	-2.09	3987.48	1-55	0
1	53	VP_CARRIL_1	LinMoving	Max V2	-4.79	260.83	-0.14	-879.84	-1.73	4038.22	1-56	0
1	54	VP_CARRIL_1	LinMoving	Max V2	-4.94	280.09	-0.12	-917.60	-1.40	4056.58	1-57	0
1	55	VP_CARRIL_1	LinMoving	Max V2	-5.06	299.71	-0.11	-955.37	-1.09	4041.12	1-58	0
1	56	VP_CARRIL_1	LinMoving	Max V2	-5.15	319.64	-0.10	-993.13	-0.81	3990.52	1-59	0
1	57	VP_CARRIL_1	LinMoving	Max V2	-5.21	339.88	-0.09	-1030.90	-0.55	3903.54	1-60	0
1	58	VP_CARRIL_1	LinMoving	Max V2	-5.22	360.39	-0.07	-1068.66	-0.32	3779.05	1-61	0
1	59	VP_CARRIL_1	LinMoving	Max V2	-5.19	381.16	-0.06	-1106.42	-0.12	3615.98	1-62	0
1	60	VP_CARRIL_1	LinMoving	Max V2	-5.12	402.16	-0.05	-1144.19	0.07	3413.39	1-63	0
1	61	VP_CARRIL_1	LinMoving	Max V2	-5.00	423.37	-0.03	-1181.95	0.22	3170.40	1-64	0
1	62	VP_CARRIL_1	LinMoving	Max V2	-4.83	444.76	-0.02	-1219.71	0.35	2886.25	1-65	0
1	63	VP_CARRIL_1	LinMoving	Max V2	-4.61	466.31	-0.01	-1257.48	0.46	2560.26	1-66	0
1	64	VP_CARRIL_1	LinMoving	Max V2	-4.33	488.01	0.00	-1295.24	0.54	2191.84	1-67	0
1	65	VP_CARRIL_1	LinMoving	Max V2	-3.99	509.82	0.02	-1333.01	0.59	1780.48	1-68	0
1	66	VP_CARRIL_1	LinMoving	Max V2	-3.59	531.72	0.03	-1370.77	0.62	1325.81	1-69	0
1	67	VP_CARRIL_1	LinMoving	Max V2	-3.13	553.69	0.04	-1408.53	0.63	827.61	1-70	0
1	67.5	VP_CARRIL_1	LinMoving	Max V2	-3.13	553.69	0.04	-1408.53	0.61	550.99	1-71	0
1	68.5	VP_CARRIL_1	LinMoving	Max V2	0.00	0.00	0.00	0.00	0.00	0.00	1-72	0
1	0	VP_CARRIL_1	LinMoving	Min V2	0.00	0.00	0.00	0.00	0.00	0.00	1-1	0
1	0.5	VP_CARRIL_1	LinMoving	Min V2	-2.60	-575.69	-0.05	1441.01	0.58	-2.24	1-2	0
1	1.5	VP_CARRIL_1	LinMoving	Min V2	-3.13	-553.69	-0.04	1408.53	0.61	550.77	1-3	0
1	2	VP_CARRIL_1	LinMoving	Min V2	-3.13	-553.69	-0.04	1408.53	0.63	827.49	1-4	0
1	3	VP_CARRIL_1	LinMoving	Min V2	-3.59	-531.72	-0.03	1370.77	0.62	1325.81	1-5	0
1	4	VP_CARRIL_1	LinMoving	Min V2	-3.99	-509.82	-0.02	1333.00	0.59	1780.48	1-6	0
1	5	VP_CARRIL_1	LinMoving	Min V2	-4.33	-488.01	0.00	1295.24	0.54	2191.83	1-7	0
1	6	VP_CARRIL_1	LinMoving	Min V2	-4.61	-466.31	0.01	1257.47	0.46	2560.26	1-8	0
1	7	VP_CARRIL_1	LinMoving	Min V2	-4.83	-444.76	0.02	1219.71	0.35	2886.25	1-9	0

ESTRUCTURA E1. ESFUERZOS EN TABLERO PARA TODOS LOS CASOS E HIPOTESIS DE CARGA

Frame	Station	OutputCase	CaseType	StepType	P	V2	V3	T	M2	M3	FrameElem	ElemStation
Text	m	Text	Text	Text	KN	KN	KN	KN-m	KN-m	KN-m	Text	m
1	8	VP_CARRIL_1	LinMoving	Min V2	-5.00	-423.37	0.04	1181.95	0.22	3170.40	1-10	0
1	9	VP_CARRIL_1	LinMoving	Min V2	-5.12	-402.16	0.05	1144.18	0.06	3413.39	1-11	0
1	10	VP_CARRIL_1	LinMoving	Min V2	-5.19	-381.16	0.06	1106.42	-0.12	3615.98	1-12	0
1	11	VP_CARRIL_1	LinMoving	Min V2	-5.22	-360.39	0.07	1068.66	-0.32	3779.05	1-13	0
1	12	VP_CARRIL_1	LinMoving	Min V2	-5.21	-339.88	0.09	1030.89	-0.56	3903.54	1-14	0
1	13	VP_CARRIL_1	LinMoving	Min V2	-5.15	-319.64	0.10	993.13	-0.81	3990.52	1-15	0
1	14	VP_CARRIL_1	LinMoving	Min V2	-5.06	-299.71	0.11	955.37	-1.10	4041.12	1-16	0
1	15	VP_CARRIL_1	LinMoving	Min V2	-4.94	-280.09	0.12	917.60	-1.40	4056.58	1-17	0
1	16	VP_CARRIL_1	LinMoving	Min V2	-4.79	-260.83	0.14	879.84	-1.74	4038.22	1-18	0
1	17	VP_CARRIL_1	LinMoving	Min V2	-4.61	-241.94	0.15	842.07	-2.09	3987.48	1-19	0
1	18	VP_CARRIL_1	LinMoving	Min V2	-4.41	-223.44	0.16	804.31	-2.48	3905.85	1-20	0
1	19	VP_CARRIL_1	LinMoving	Min V2	-4.18	-205.35	0.17	766.55	-2.88	3794.96	1-21	0
1	20	VP_CARRIL_1	LinMoving	Min V2	-3.93	-187.71	0.19	728.78	-3.32	3656.49	1-22	0
1	21	VP_CARRIL_1	LinMoving	Min V2	-3.67	-170.53	0.20	691.02	-3.78	3492.24	1-23	0
1	22	VP_CARRIL_1	LinMoving	Min V2	-3.40	-153.83	0.21	653.26	-4.26	3304.09	1-24	0
1	23	VP_CARRIL_1	LinMoving	Min V2	-3.11	-137.65	0.22	615.49	-4.77	3094.02	1-25	0
1	24	VP_CARRIL_1	LinMoving	Min V2	-2.81	-121.99	0.24	577.73	-5.30	2864.10	1-26	0
1	25	VP_CARRIL_1	LinMoving	Min V2	-2.51	-106.90	0.25	539.96	-5.86	2616.49	1-27	0
1	26	VP_CARRIL_1	LinMoving	Min V2	-2.21	-92.38	0.26	502.20	-6.45	2353.45	1-28	0
1	27	VP_CARRIL_1	LinMoving	Min V2	-1.91	-78.46	0.27	464.44	-7.06	2077.32	1-29	0
1	28	VP_CARRIL_1	LinMoving	Min V2	-1.61	-65.17	0.29	426.67	-7.70	1790.54	1-30	0
1	29	VP_CARRIL_1	LinMoving	Min V2	-1.32	-52.52	0.30	388.91	-8.36	1495.66	1-31	0
1	30	VP_CARRIL_1	LinMoving	Min V2	-1.03	-40.55	0.31	351.15	-9.04	1195.28	1-32	0
1	31	VP_CARRIL_1	LinMoving	Min V2	-0.76	-29.28	0.33	313.38	-9.75	892.14	1-33	0
1	32	VP_CARRIL_1	LinMoving	Min V2	-0.50	-18.71	0.34	276.11	-10.48	588.97	1-34	0
1	33	VP_CARRIL_1	LinMoving	Min V2	-0.26	-8.88	0.35	242.17	-11.16	288.32	1-35	0
1	33.75	VP_CARRIL_1	LinMoving	Min V2	-0.83	-5.46	-0.03	-15.42	1.28	31.12	1-36	0
1	34.5	VP_CARRIL_1	LinMoving	Min V2	-0.31	-589.21	-0.35	1252.14	-11.64	-293.47	1-37	0
1	35.25	VP_CARRIL_1	LinMoving	Min V2	-0.55	-579.23	-0.34	1216.81	-10.99	-119.98	1-38	0
1	36	VP_CARRIL_1	LinMoving	Min V2	-0.55	-579.23	-0.34	1216.83	-10.74	314.42	1-39	0
1	37	VP_CARRIL_1	LinMoving	Min V2	-1.09	-557.11	-0.31	1141.30	-9.58	390.06	1-40	0
1	38	VP_CARRIL_1	LinMoving	Min V2	-1.37	-545.00	-0.30	1103.53	-8.87	716.20	1-41	0
1	39	VP_CARRIL_1	LinMoving	Min V2	-1.67	-532.23	-0.28	1065.77	-8.19	1037.80	1-42	0
1	40	VP_CARRIL_1	LinMoving	Min V2	-1.97	-518.81	-0.27	1028.01	-7.53	1352.19	1-43	0
1	41	VP_CARRIL_1	LinMoving	Min V2	-2.27	-504.77	-0.26	990.24	-6.90	1656.79	1-44	0
1	42	VP_CARRIL_1	LinMoving	Min V2	-2.57	-490.13	-0.25	952.48	-6.29	1949.15	1-45	0
1	43	VP_CARRIL_1	LinMoving	Min V2	-2.87	-474.92	-0.23	914.72	-5.71	2226.88	1-46	0
1	44	VP_CARRIL_1	LinMoving	Min V2	-3.17	-459.16	-0.22	876.95	-5.15	2487.70	1-47	0
1	45	VP_CARRIL_1	LinMoving	Min V2	-3.45	-442.87	-0.21	839.19	-4.62	2729.40	1-48	0
1	46	VP_CARRIL_1	LinMoving	Min V2	-3.72	-426.08	-0.20	801.42	-4.11	2949.89	1-49	0
1	47	VP_CARRIL_1	LinMoving	Min V2	-3.98	-408.80	-0.18	763.66	-3.63	3147.16	1-50	0
1	48	VP_CARRIL_1	LinMoving	Min V2	-4.23	-391.07	-0.17	725.90	-3.17	3319.29	1-51	0
1	49	VP_CARRIL_1	LinMoving	Min V2	-4.45	-372.90	-0.16	688.13	-2.74	3464.45	1-52	0
1	50	VP_CARRIL_1	LinMoving	Min V2	-4.65	-354.32	-0.15	650.37	-2.34	3580.92	1-53	0
1	51	VP_CARRIL_1	LinMoving	Min V2	-4.82	-335.35	-0.13	612.61	-1.96	3667.06	1-54	0
1	52	VP_CARRIL_1	LinMoving	Min V2	-4.97	-316.01	-0.12	574.84	-1.60	3721.32	1-55	0
1	53	VP_CARRIL_1	LinMoving	Min V2	-5.08	-296.33	-0.11	537.08	-1.27	3742.25	1-56	0
1	54	VP_CARRIL_1	LinMoving	Min V2	-5.17	-276.34	-0.10	499.31	-0.97	3728.48	1-57	0
1	55	VP_CARRIL_1	LinMoving	Min V2	-5.21	-256.04	-0.08	461.55	-0.69	3678.75	1-58	0
1	56	VP_CARRIL_1	LinMoving	Min V2	-5.22	-235.48	-0.07	423.79	-0.43	3591.89	1-59	0
1	57	VP_CARRIL_1	LinMoving	Min V2	-5.18	-214.66	-0.06	386.02	-0.20	3466.81	1-60	0
1	58	VP_CARRIL_1	LinMoving	Min V2	-5.10	-193.62	-0.04	348.26	0.00	3302.51	1-61	0
1	59	VP_CARRIL_1	LinMoving	Min V2	-4.97	-172.37	-0.03	310.50	0.18	3098.11	1-62	0
1	60	VP_CARRIL_1	LinMoving	Min V2	-4.79	-150.94	-0.02	272.73	0.33	2852.80	1-63	0
1	61	VP_CARRIL_1	LinMoving	Min V2	-4.55	-129.36	-0.01	234.97	0.46	2565.87	1-64	0
1	62	VP_CARRIL_1	LinMoving	Min V2	-4.27	-107.64	0.01	197.20	0.56	2236.69	1-65	0
1	63	VP_CARRIL_1	LinMoving	Min V2	-3.92	-85.81	0.02	159.44	0.64	1864.75	1-66	0
1	64	VP_CARRIL_1	LinMoving	Min V2	-3.51	-63.90	0.03	121.68	0.69	1449.60	1-67	0
1	65	VP_CARRIL_1	LinMoving	Min V2	-0.37	-57.62	-0.18	-125.14	-0.53	-202.04	1-68	0
1	66	VP_CARRIL_1	LinMoving	Min V2	-0.37	-57.62	-0.18	-125.14	-0.35	-144.42	1-69	0
1	67	VP_CARRIL_1	LinMoving	Min V2	-0.37	-57.62	-0.18	-125.15	-0.18	-86.78	1-70	0
1	67.5	VP_CARRIL_1	LinMoving	Min V2	-0.37	-57.62	-0.18	-125.16	-0.09	-57.94	1-71	0
1	68.5	VP_CARRIL_1	LinMoving	Min V2	0.00	-300.00	0.00	750.00	0.00	-149.70	1-72	0
1	0	VP_CARRIL_1	LinMoving	Max V3	0.00	0.00	0.00	0.00	0.00	0.00	1-1	0
1	0.5	VP_CARRIL_1	LinMoving	Max V3	-0.09	-1.53	0.35	221.38	0.11	-0.07	1-2	0
1	1.5	VP_CARRIL_1	LinMoving	Max V3	-0.09	-1.53	0.35	221.35	-0.24	1.45	1-3	0
1	2	VP_CARRIL_1	LinMoving	Max V3	-0.09	-1.53	0.35	221.34	-0.41	2.22	1-4	0
1	3	VP_CARRIL_1	LinMoving	Max V3	-0.09	-1.53	0.35	221.34	-0.77	3.75	1-5	0
1	4	VP_CARRIL_1	LinMoving	Max V3	-0.09	-1.53	0.35	221.34	-1.12	5.28	1-6	0
1	5	VP_CARRIL_1	LinMoving	Max V3	-0.09	-1.53	0.35	221.34	-1.47	6.82	1-7	0
1	6	VP_CARRIL_1	LinMoving	Max V3	-0.09	-1.53	0.35	221.34	-1.82	8.35	1-8	0
1	7	VP_CARRIL_1	LinMoving	Max V3	-0.09	-1.53	0.35	221.34	-2.17	9.89	1-9	0
1	8	VP_CARRIL_1	LinMoving	Max V3	-0.09	-1.53	0.35	221.34	-2.52	11.42	1-10	0
1	9	VP_CARRIL_1	LinMoving	Max V3	-0.09	-1.53	0.35	221.34	-2.87	12.95	1-11	0
1	10	VP_CARRIL_1	LinMoving	Max V3	-0.09	-1.53	0.35	221.34	-3.22	14.49	1-12	0
1	11	VP_CARRIL_1	LinMoving	Max V3	-0.09	-1.53	0.35	221.34	-3.57	16.02	1-13	0
1	12	VP_CARRIL_1	LinMoving	Max V3	-0.09	-1.53	0.35	221.34	-3.93	17.55	1-14	0
1	13	VP_CARRIL_1	LinMoving	Max V3	-0.09	-1.53	0.35	221.34	-4.28	19.09	1-15	0
1	14	VP_CARRIL_1	LinMoving	Max V3	-0.09	-1.53	0.35	221.34	-4.63	20.62	1-16	0
1	15	VP_CARRIL_1	LinMoving	Max V3	-0.09	-1.53	0.35	221.34	-4.98	22.15	1-17	0
1	16	VP_CARRIL_1	LinMoving	Max V3	-0.09	-1.53	0.35	221.34	-5.33	23.69	1-18	0

ESTRUCTURA E1. ESFUERZOS EN TABLERO PARA TODOS LOS CASOS E HIPOTESIS DE CARGA

Frame	Station	OutputCase	CaseType	StepType	P	V2	V3	T	M2	M3	FrameElem	ElemStation
Text	m	Text	Text	Text	KN	KN	KN	KN-m	KN-m	KN-m	Text	m
1	17	VP_CARRIL_1	LinMoving	Max V3	-0.09	-1.53	0.35	221.34	-5.68	25.22	1-19	0
1	18	VP_CARRIL_1	LinMoving	Max V3	-0.09	-1.53	0.35	221.34	-6.03	26.76	1-20	0
1	19	VP_CARRIL_1	LinMoving	Max V3	-0.09	-1.53	0.35	221.34	-6.38	28.29	1-21	0
1	20	VP_CARRIL_1	LinMoving	Max V3	-0.09	-1.53	0.35	221.34	-6.74	29.82	1-22	0
1	21	VP_CARRIL_1	LinMoving	Max V3	-0.09	-1.53	0.35	221.34	-7.09	31.36	1-23	0
1	22	VP_CARRIL_1	LinMoving	Max V3	-0.09	-1.53	0.35	221.34	-7.44	32.89	1-24	0
1	23	VP_CARRIL_1	LinMoving	Max V3	-0.09	-1.53	0.35	221.34	-7.79	34.42	1-25	0
1	24	VP_CARRIL_1	LinMoving	Max V3	-0.09	-1.53	0.35	221.34	-8.14	35.96	1-26	0
1	25	VP_CARRIL_1	LinMoving	Max V3	-0.09	-1.53	0.35	221.34	-8.49	37.49	1-27	0
1	26	VP_CARRIL_1	LinMoving	Max V3	-0.09	-1.53	0.35	221.34	-8.84	39.03	1-28	0
1	27	VP_CARRIL_1	LinMoving	Max V3	-0.09	-1.53	0.35	221.34	-9.19	40.56	1-29	0
1	28	VP_CARRIL_1	LinMoving	Max V3	-0.09	-1.53	0.35	221.34	-9.54	42.09	1-30	0
1	29	VP_CARRIL_1	LinMoving	Max V3	-0.09	-1.53	0.35	221.34	-9.90	43.63	1-31	0
1	30	VP_CARRIL_1	LinMoving	Max V3	-0.09	-1.53	0.35	221.34	-10.25	45.16	1-32	0
1	31	VP_CARRIL_1	LinMoving	Max V3	-0.09	-1.53	0.35	221.34	-10.60	46.69	1-33	0
1	32	VP_CARRIL_1	LinMoving	Max V3	-0.09	-1.53	0.35	221.34	-10.95	48.23	1-34	0
1	33	VP_CARRIL_1	LinMoving	Max V3	-0.09	-1.53	0.35	221.35	-11.30	49.76	1-35	0
1	33.75	VP_CARRIL_1	LinMoving	Max V3	-0.09	58.48	0.35	71.33	-11.56	5.91	1-36	0
1	34.5	VP_CARRIL_1	LinMoving	Max V3	-1.32	-0.51	0.07	-6.42	2.51	-18.51	1-37	0
1	35.25	VP_CARRIL_1	LinMoving	Max V3	-1.32	-0.51	0.07	-6.42	2.46	-18.13	1-38	0
1	36	VP_CARRIL_1	LinMoving	Max V3	-1.32	-0.51	0.07	-6.42	2.41	-17.80	1-39	0
1	37	VP_CARRIL_1	LinMoving	Max V3	-1.32	-0.51	0.07	-6.42	2.33	-17.29	1-40	0
1	38	VP_CARRIL_1	LinMoving	Max V3	-1.32	-0.51	0.07	-6.42	2.26	-16.78	1-41	0
1	39	VP_CARRIL_1	LinMoving	Max V3	-1.32	-0.51	0.07	-6.42	2.19	-16.27	1-42	0
1	40	VP_CARRIL_1	LinMoving	Max V3	-1.32	-0.51	0.07	-6.42	2.12	-15.76	1-43	0
1	41	VP_CARRIL_1	LinMoving	Max V3	-1.32	-0.51	0.07	-6.42	2.05	-15.26	1-44	0
1	42	VP_CARRIL_1	LinMoving	Max V3	-1.32	-0.51	0.07	-6.42	1.97	-14.75	1-45	0
1	43	VP_CARRIL_1	LinMoving	Max V3	-1.32	-0.51	0.07	-6.42	1.90	-14.24	1-46	0
1	44	VP_CARRIL_1	LinMoving	Max V3	-1.32	-0.51	0.07	-6.42	1.83	-13.73	1-47	0
1	45	VP_CARRIL_1	LinMoving	Max V3	-1.32	-0.51	0.07	-6.42	1.76	-13.22	1-48	0
1	46	VP_CARRIL_1	LinMoving	Max V3	-1.32	-0.51	0.07	-6.42	1.68	-12.71	1-49	0
1	47	VP_CARRIL_1	LinMoving	Max V3	-1.32	-0.51	0.07	-6.42	1.61	-12.21	1-50	0
1	48	VP_CARRIL_1	LinMoving	Max V3	-1.32	-0.51	0.07	-6.42	1.54	-11.70	1-51	0
1	49	VP_CARRIL_1	LinMoving	Max V3	-1.32	-0.51	0.07	-6.42	1.47	-11.19	1-52	0
1	50	VP_CARRIL_1	LinMoving	Max V3	-1.32	-0.51	0.07	-6.42	1.40	-10.68	1-53	0
1	51	VP_CARRIL_1	LinMoving	Max V3	-1.32	-0.51	0.07	-6.42	1.32	-10.17	1-54	0
1	52	VP_CARRIL_1	LinMoving	Max V3	-1.32	-0.51	0.07	-6.42	1.25	-9.67	1-55	0
1	53	VP_CARRIL_1	LinMoving	Max V3	-1.32	-0.51	0.07	-6.42	1.18	-9.16	1-56	0
1	54	VP_CARRIL_1	LinMoving	Max V3	-1.32	-0.51	0.07	-6.42	1.11	-8.65	1-57	0
1	55	VP_CARRIL_1	LinMoving	Max V3	-1.32	-0.51	0.07	-6.42	1.04	-8.14	1-58	0
1	56	VP_CARRIL_1	LinMoving	Max V3	-1.32	-0.51	0.07	-6.42	0.96	-7.63	1-59	0
1	57	VP_CARRIL_1	LinMoving	Max V3	-1.32	-0.51	0.07	-6.42	0.89	-7.12	1-60	0
1	58	VP_CARRIL_1	LinMoving	Max V3	-1.32	-0.51	0.07	-6.42	0.82	-6.62	1-61	0
1	59	VP_CARRIL_1	LinMoving	Max V3	-1.32	-0.51	0.07	-6.42	0.75	-6.11	1-62	0
1	60	VP_CARRIL_1	LinMoving	Max V3	-1.32	-0.51	0.07	-6.42	0.68	-5.60	1-63	0
1	61	VP_CARRIL_1	LinMoving	Max V3	-1.32	-0.51	0.07	-6.42	0.60	-5.09	1-64	0
1	62	VP_CARRIL_1	LinMoving	Max V3	-1.32	-0.51	0.07	-6.42	0.53	-4.58	1-65	0
1	63	VP_CARRIL_1	LinMoving	Max V3	-1.32	-0.51	0.07	-6.42	0.46	-4.07	1-66	0
1	64	VP_CARRIL_1	LinMoving	Max V3	-1.32	-0.51	0.07	-6.42	0.39	-3.57	1-67	0
1	65	VP_CARRIL_1	LinMoving	Max V3	-1.32	-0.51	0.07	-6.42	0.31	-3.06	1-68	0
1	66	VP_CARRIL_1	LinMoving	Max V3	-1.32	-0.51	0.07	-6.42	0.24	-2.55	1-69	0
1	67	VP_CARRIL_1	LinMoving	Max V3	-1.32	-0.51	0.07	-6.42	0.17	-1.99	1-70	0
1	67.5	VP_CARRIL_1	LinMoving	Max V3	-1.32	-0.51	0.07	-6.41	0.13	-1.65	1-71	0
1	68.5	VP_CARRIL_1	LinMoving	Max V3	0.00	0.00	0.00	0.00	0.00	0.00	1-72	0
1	0	VP_CARRIL_1	LinMoving	Min V3	0.00	0.00	0.00	0.00	0.00	0.00	1-1	0
1	0.5	VP_CARRIL_1	LinMoving	Min V3	-1.32	0.51	-0.07	6.41	0.06	-1.14	1-2	0
1	1.5	VP_CARRIL_1	LinMoving	Min V3	-1.32	0.51	-0.07	6.42	0.14	-1.74	1-3	0
1	2	VP_CARRIL_1	LinMoving	Min V3	-1.32	0.51	-0.07	6.42	0.17	-2.04	1-4	0
1	3	VP_CARRIL_1	LinMoving	Min V3	-1.32	0.51	-0.07	6.42	0.24	-2.55	1-5	0
1	4	VP_CARRIL_1	LinMoving	Min V3	-1.32	0.51	-0.07	6.42	0.32	-3.06	1-6	0
1	5	VP_CARRIL_1	LinMoving	Min V3	-1.32	0.51	-0.07	6.42	0.39	-3.57	1-7	0
1	6	VP_CARRIL_1	LinMoving	Min V3	-1.32	0.51	-0.07	6.42	0.46	-4.07	1-8	0
1	7	VP_CARRIL_1	LinMoving	Min V3	-1.32	0.51	-0.07	6.42	0.53	-4.58	1-9	0
1	8	VP_CARRIL_1	LinMoving	Min V3	-1.32	0.51	-0.07	6.42	0.61	-5.09	1-10	0
1	9	VP_CARRIL_1	LinMoving	Min V3	-1.32	0.51	-0.07	6.42	0.68	-5.60	1-11	0
1	10	VP_CARRIL_1	LinMoving	Min V3	-1.32	0.51	-0.07	6.42	0.75	-6.11	1-12	0
1	11	VP_CARRIL_1	LinMoving	Min V3	-1.32	0.51	-0.07	6.42	0.82	-6.61	1-13	0
1	12	VP_CARRIL_1	LinMoving	Min V3	-1.32	0.51	-0.07	6.42	0.90	-7.12	1-14	0
1	13	VP_CARRIL_1	LinMoving	Min V3	-1.32	0.51	-0.07	6.42	0.97	-7.63	1-15	0
1	14	VP_CARRIL_1	LinMoving	Min V3	-1.32	0.51	-0.07	6.42	1.04	-8.14	1-16	0
1	15	VP_CARRIL_1	LinMoving	Min V3	-1.32	0.51	-0.07	6.42	1.11	-8.65	1-17	0
1	16	VP_CARRIL_1	LinMoving	Min V3	-1.32	0.51	-0.07	6.42	1.18	-9.16	1-18	0
1	17	VP_CARRIL_1	LinMoving	Min V3	-1.32	0.51	-0.07	6.42	1.26	-9.66	1-19	0
1	18	VP_CARRIL_1	LinMoving	Min V3	-1.32	0.51	-0.07	6.42	1.33	-10.17	1-20	0
1	19	VP_CARRIL_1	LinMoving	Min V3	-1.32	0.51	-0.07	6.42	1.40	-10.68	1-21	0
1	20	VP_CARRIL_1	LinMoving	Min V3	-1.32	0.51	-0.07	6.42	1.47	-11.19	1-22	0
1	21	VP_CARRIL_1	LinMoving	Min V3	-1.32	0.51	-0.07	6.42	1.55	-11.70	1-23	0
1	22	VP_CARRIL_1	LinMoving	Min V3	-1.32	0.51	-0.07	6.42	1.62	-12.21	1-24	0
1	23	VP_CARRIL_1	LinMoving	Min V3	-1.32	0.51	-0.07	6.42	1.69	-12.71	1-25	0
1	24	VP_CARRIL_1	LinMoving	Min V3	-1.32	0.51	-0.07	6.42	1.76	-13.22	1-26	0
1	25	VP_CARRIL_1	LinMoving	Min V3	-1.32	0.51	-0.07	6.42	1.84	-13.73	1-27	0

ESTRUCTURA E1. ESFUERZOS EN TABLERO PARA TODOS LOS CASOS E HIPOTESIS DE CARGA

Frame	Station	OutputCase	CaseType	StepType	P	V2	V3	T	M2	M3	FrameElem	ElemStation
Text	m	Text	Text	Text	KN	KN	KN	KN-m	KN-m	KN-m	Text	m
1	26	VP_CARRIL_1	LinMoving	Min V3	-1.32	0.51	-0.07	6.42	1.91	-14.24	1-28	0
1	27	VP_CARRIL_1	LinMoving	Min V3	-1.32	0.51	-0.07	6.42	1.98	-14.75	1-29	0
1	28	VP_CARRIL_1	LinMoving	Min V3	-1.32	0.51	-0.07	6.42	2.05	-15.25	1-30	0
1	29	VP_CARRIL_1	LinMoving	Min V3	-1.32	0.51	-0.07	6.42	2.13	-15.76	1-31	0
1	30	VP_CARRIL_1	LinMoving	Min V3	-1.32	0.51	-0.07	6.42	2.20	-16.27	1-32	0
1	31	VP_CARRIL_1	LinMoving	Min V3	-1.32	0.51	-0.07	6.42	2.27	-16.78	1-33	0
1	32	VP_CARRIL_1	LinMoving	Min V3	-1.32	0.51	-0.07	6.42	2.34	-17.29	1-34	0
1	33	VP_CARRIL_1	LinMoving	Min V3	-1.32	0.51	-0.07	6.42	2.42	-17.75	1-35	0
1	33.75	VP_CARRIL_1	LinMoving	Min V3	-1.32	0.51	-0.07	6.42	2.47	-18.13	1-36	0
1	34.5	VP_CARRIL_1	LinMoving	Min V3	-0.09	-298.47	-0.35	528.65	-11.83	-157.94	1-37	0
1	35.25	VP_CARRIL_1	LinMoving	Min V3	-0.09	-58.48	-0.35	-71.33	-11.56	5.91	1-38	0
1	36	VP_CARRIL_1	LinMoving	Min V3	-0.09	1.53	-0.35	-221.34	-11.30	49.76	1-39	0
1	37	VP_CARRIL_1	LinMoving	Min V3	-0.09	1.53	-0.35	-221.34	-10.95	48.23	1-40	0
1	38	VP_CARRIL_1	LinMoving	Min V3	-0.09	1.53	-0.35	-221.34	-10.60	46.69	1-41	0
1	39	VP_CARRIL_1	LinMoving	Min V3	-0.09	1.53	-0.35	-221.34	-10.25	45.16	1-42	0
1	40	VP_CARRIL_1	LinMoving	Min V3	-0.09	1.53	-0.35	-221.34	-9.90	43.63	1-43	0
1	41	VP_CARRIL_1	LinMoving	Min V3	-0.09	1.53	-0.35	-221.34	-9.54	42.09	1-44	0
1	42	VP_CARRIL_1	LinMoving	Min V3	-0.09	1.53	-0.35	-221.34	-9.19	40.56	1-45	0
1	43	VP_CARRIL_1	LinMoving	Min V3	-0.09	1.53	-0.35	-221.34	-8.84	39.03	1-46	0
1	44	VP_CARRIL_1	LinMoving	Min V3	-0.09	1.53	-0.35	-221.34	-8.49	37.49	1-47	0
1	45	VP_CARRIL_1	LinMoving	Min V3	-0.09	1.53	-0.35	-221.34	-8.14	35.96	1-48	0
1	46	VP_CARRIL_1	LinMoving	Min V3	-0.09	1.53	-0.35	-221.34	-7.79	34.43	1-49	0
1	47	VP_CARRIL_1	LinMoving	Min V3	-0.09	1.53	-0.35	-221.34	-7.44	32.89	1-50	0
1	48	VP_CARRIL_1	LinMoving	Min V3	-0.09	1.53	-0.35	-221.34	-7.09	31.36	1-51	0
1	49	VP_CARRIL_1	LinMoving	Min V3	-0.09	1.53	-0.35	-221.34	-6.74	29.82	1-52	0
1	50	VP_CARRIL_1	LinMoving	Min V3	-0.09	1.53	-0.35	-221.34	-6.38	28.29	1-53	0
1	51	VP_CARRIL_1	LinMoving	Min V3	-0.09	1.53	-0.35	-221.34	-6.03	26.76	1-54	0
1	52	VP_CARRIL_1	LinMoving	Min V3	-0.09	1.53	-0.35	-221.34	-5.68	25.22	1-55	0
1	53	VP_CARRIL_1	LinMoving	Min V3	-0.09	1.53	-0.35	-221.34	-5.33	23.69	1-56	0
1	54	VP_CARRIL_1	LinMoving	Min V3	-0.09	1.53	-0.35	-221.34	-4.98	22.16	1-57	0
1	55	VP_CARRIL_1	LinMoving	Min V3	-0.09	1.53	-0.35	-221.34	-4.63	20.62	1-58	0
1	56	VP_CARRIL_1	LinMoving	Min V3	-0.09	1.53	-0.35	-221.34	-4.28	19.09	1-59	0
1	57	VP_CARRIL_1	LinMoving	Min V3	-0.09	1.53	-0.35	-221.34	-3.93	17.55	1-60	0
1	58	VP_CARRIL_1	LinMoving	Min V3	-0.09	1.53	-0.35	-221.34	-3.58	16.02	1-61	0
1	59	VP_CARRIL_1	LinMoving	Min V3	-0.09	1.53	-0.35	-221.34	-3.22	14.49	1-62	0
1	60	VP_CARRIL_1	LinMoving	Min V3	-0.09	1.53	-0.35	-221.34	-2.87	12.95	1-63	0
1	61	VP_CARRIL_1	LinMoving	Min V3	-0.09	1.53	-0.35	-221.34	-2.52	11.42	1-64	0
1	62	VP_CARRIL_1	LinMoving	Min V3	-0.09	1.53	-0.35	-221.34	-2.17	9.89	1-65	0
1	63	VP_CARRIL_1	LinMoving	Min V3	-0.09	1.53	-0.35	-221.34	-1.82	8.35	1-66	0
1	64	VP_CARRIL_1	LinMoving	Min V3	-0.09	1.53	-0.35	-221.34	-1.47	6.82	1-67	0
1	65	VP_CARRIL_1	LinMoving	Min V3	-0.09	1.53	-0.35	-221.34	-1.12	5.28	1-68	0
1	66	VP_CARRIL_1	LinMoving	Min V3	-0.09	1.53	-0.35	-221.34	-0.77	3.75	1-69	0
1	67	VP_CARRIL_1	LinMoving	Min V3	-0.09	1.53	-0.35	-221.35	-0.41	2.22	1-70	0
1	67.5	VP_CARRIL_1	LinMoving	Min V3	-0.09	1.53	-0.35	-221.38	-0.24	1.46	1-71	0
1	68.5	VP_CARRIL_1	LinMoving	Min V3	0.00	0.00	0.00	0.00	0.00	0.00	1-72	0
1	0	VP_CARRIL_1	LinMoving	Max T	0.00	0.00	0.00	0.00	0.00	0.00	1-1	0
1	0.5	VP_CARRIL_1	LinMoving	Max T	-2.60	-575.69	-0.05	1441.01	0.58	-2.24	1-2	0
1	1.5	VP_CARRIL_1	LinMoving	Max T	-3.13	-553.69	-0.04	1408.53	0.61	550.77	1-3	0
1	2	VP_CARRIL_1	LinMoving	Max T	-3.13	-553.69	-0.04	1408.53	0.63	827.49	1-4	0
1	3	VP_CARRIL_1	LinMoving	Max T	-3.59	-531.72	-0.03	1370.77	0.62	1325.81	1-5	0
1	4	VP_CARRIL_1	LinMoving	Max T	-3.99	-509.82	-0.02	1333.00	0.59	1780.48	1-6	0
1	5	VP_CARRIL_1	LinMoving	Max T	-4.33	-488.01	0.00	1295.24	0.54	2191.83	1-7	0
1	6	VP_CARRIL_1	LinMoving	Max T	-4.61	-466.31	0.01	1257.47	0.46	2560.26	1-8	0
1	7	VP_CARRIL_1	LinMoving	Max T	-4.83	-444.76	0.02	1219.71	0.35	2886.25	1-9	0
1	8	VP_CARRIL_1	LinMoving	Max T	-5.00	-423.37	0.04	1181.95	0.22	3170.40	1-10	0
1	9	VP_CARRIL_1	LinMoving	Max T	-5.12	-402.16	0.05	1144.18	0.06	3413.39	1-11	0
1	10	VP_CARRIL_1	LinMoving	Max T	-5.19	-381.16	0.06	1106.42	-0.12	3615.98	1-12	0
1	11	VP_CARRIL_1	LinMoving	Max T	-5.22	-360.39	0.07	1068.66	-0.32	3779.05	1-13	0
1	12	VP_CARRIL_1	LinMoving	Max T	-5.21	-339.88	0.09	1030.89	-0.56	3903.54	1-14	0
1	13	VP_CARRIL_1	LinMoving	Max T	-5.15	-319.64	0.10	993.13	-0.81	3990.52	1-15	0
1	14	VP_CARRIL_1	LinMoving	Max T	-5.06	-299.71	0.11	955.37	-1.10	4041.12	1-16	0
1	15	VP_CARRIL_1	LinMoving	Max T	-4.94	-280.09	0.12	917.60	-1.40	4056.58	1-17	0
1	16	VP_CARRIL_1	LinMoving	Max T	-4.79	-260.83	0.14	879.84	-1.74	4038.22	1-18	0
1	17	VP_CARRIL_1	LinMoving	Max T	-4.61	-241.94	0.15	842.07	-2.09	3987.48	1-19	0
1	18	VP_CARRIL_1	LinMoving	Max T	-4.41	-223.44	0.16	804.31	-2.48	3905.85	1-20	0
1	19	VP_CARRIL_1	LinMoving	Max T	-4.18	-205.35	0.17	766.55	-2.88	3794.96	1-21	0
1	20	VP_CARRIL_1	LinMoving	Max T	-3.93	-187.71	0.19	728.78	-3.32	3656.49	1-22	0
1	21	VP_CARRIL_1	LinMoving	Max T	-3.67	-170.53	0.20	691.02	-3.78	3492.24	1-23	0
1	22	VP_CARRIL_1	LinMoving	Max T	-3.40	-153.83	0.21	653.26	-4.26	3304.09	1-24	0
1	23	VP_CARRIL_1	LinMoving	Max T	-3.11	-137.65	0.22	615.49	-4.77	3094.02	1-25	0
1	24	VP_CARRIL_1	LinMoving	Max T	-2.81	-121.99	0.24	577.73	-5.30	2864.10	1-26	0
1	25	VP_CARRIL_1	LinMoving	Max T	-2.51	-106.90	0.25	539.96	-5.86	2616.49	1-27	0
1	26	VP_CARRIL_1	LinMoving	Max T	-2.21	-92.38	0.26	502.20	-6.45	2353.45	1-28	0
1	27	VP_CARRIL_1	LinMoving	Max T	-1.91	-78.46	0.27	464.44	-7.06	2077.32	1-29	0
1	28	VP_CARRIL_1	LinMoving	Max T	-1.61	-65.17	0.29	426.67	-7.70	1790.54	1-30	0
1	29	VP_CARRIL_1	LinMoving	Max T	-1.32	-52.52	0.30	388.91	-8.36	1495.66	1-31	0
1	30	VP_CARRIL_1	LinMoving	Max T	-1.03	-40.55	0.31	351.15	-9.04	1195.28	1-32	0
1	31	VP_CARRIL_1	LinMoving	Max T	-0.76	-29.28	0.33	313.38	-9.75	892.14	1-33	0
1	32	VP_CARRIL_1	LinMoving	Max T	-0.50	-18.71	0.34	276.11	-10.48	588.97	1-34	0
1	33	VP_CARRIL_1	LinMoving	Max T	-0.26	-8.88	0.35	242.17	-11.16	288.32	1-35	0
1	33.75	VP_CARRIL_1	LinMoving	Max T	-0.05	0.23	0.35	217.52	-11.56	-7.74	1-36	0

ESTRUCTURA E1. ESFUERZOS EN TABLERO PARA TODOS LOS CASOS E HIPOTESIS DE CARGA

Frame	Station	OutputCase	CaseType	StepType	P	V2	V3	T	M2	M3	FrameElem	ElemStation
Text	m	Text	Text	Text	KN	KN	KN	KN-m	KN-m	KN-m	Text	m
1	34.5	VP_CARRIL_1	LinMoving	Max T	-0.31	-589.21	-0.35	1252.14	-11.64	-293.47	1-37	0
1	35.25	VP_CARRIL_1	LinMoving	Max T	-0.55	-579.23	-0.34	1216.81	-10.99	-119.98	1-38	0
1	36	VP_CARRIL_1	LinMoving	Max T	-0.55	-579.23	-0.34	1216.83	-10.74	314.42	1-39	0
1	37	VP_CARRIL_1	LinMoving	Max T	-1.09	-557.11	-0.31	1141.30	-9.58	390.06	1-40	0
1	38	VP_CARRIL_1	LinMoving	Max T	-1.37	-545.00	-0.30	1103.53	-8.87	716.20	1-41	0
1	39	VP_CARRIL_1	LinMoving	Max T	-1.67	-532.23	-0.28	1065.77	-8.19	1037.80	1-42	0
1	40	VP_CARRIL_1	LinMoving	Max T	-1.97	-518.81	-0.27	1028.01	-7.53	1352.19	1-43	0
1	41	VP_CARRIL_1	LinMoving	Max T	-2.27	-504.77	-0.26	990.24	-6.90	1656.79	1-44	0
1	42	VP_CARRIL_1	LinMoving	Max T	-2.57	-490.13	-0.25	952.48	-6.29	1949.15	1-45	0
1	43	VP_CARRIL_1	LinMoving	Max T	-2.87	-474.92	-0.23	914.72	-5.71	2226.88	1-46	0
1	44	VP_CARRIL_1	LinMoving	Max T	-3.17	-459.16	-0.22	876.95	-5.15	2487.70	1-47	0
1	45	VP_CARRIL_1	LinMoving	Max T	-3.45	-442.87	-0.21	839.19	-4.62	2729.40	1-48	0
1	46	VP_CARRIL_1	LinMoving	Max T	-3.72	-426.08	-0.20	801.42	-4.11	2949.89	1-49	0
1	47	VP_CARRIL_1	LinMoving	Max T	-3.98	-408.80	-0.18	763.66	-3.63	3147.16	1-50	0
1	48	VP_CARRIL_1	LinMoving	Max T	-4.23	-391.07	-0.17	725.90	-3.17	3319.29	1-51	0
1	49	VP_CARRIL_1	LinMoving	Max T	-4.45	-372.90	-0.16	688.13	-2.74	3464.45	1-52	0
1	50	VP_CARRIL_1	LinMoving	Max T	-4.65	-354.32	-0.15	650.37	-2.34	3580.92	1-53	0
1	51	VP_CARRIL_1	LinMoving	Max T	-4.82	-335.35	-0.13	612.61	-1.96	3667.06	1-54	0
1	52	VP_CARRIL_1	LinMoving	Max T	-4.97	-316.01	-0.12	574.84	-1.60	3721.32	1-55	0
1	53	VP_CARRIL_1	LinMoving	Max T	-5.08	-296.33	-0.11	537.08	-1.27	3742.25	1-56	0
1	54	VP_CARRIL_1	LinMoving	Max T	-5.17	-276.34	-0.10	499.31	-0.97	3728.48	1-57	0
1	55	VP_CARRIL_1	LinMoving	Max T	-5.21	-256.04	-0.08	461.55	-0.69	3678.75	1-58	0
1	56	VP_CARRIL_1	LinMoving	Max T	-5.22	-235.48	-0.07	423.79	-0.43	3591.89	1-59	0
1	57	VP_CARRIL_1	LinMoving	Max T	-5.18	-214.66	-0.06	386.02	-0.20	3466.81	1-60	0
1	58	VP_CARRIL_1	LinMoving	Max T	-5.10	-193.62	-0.04	348.26	0.00	3302.51	1-61	0
1	59	VP_CARRIL_1	LinMoving	Max T	-4.97	-172.37	-0.03	310.50	0.18	3098.11	1-62	0
1	60	VP_CARRIL_1	LinMoving	Max T	-4.79	-150.94	-0.02	272.73	0.33	2852.80	1-63	0
1	61	VP_CARRIL_1	LinMoving	Max T	-4.55	-129.36	-0.01	234.97	0.46	2565.87	1-64	0
1	62	VP_CARRIL_1	LinMoving	Max T	-4.27	-107.64	0.01	197.20	0.56	2236.69	1-65	0
1	63	VP_CARRIL_1	LinMoving	Max T	-3.92	-85.81	0.02	159.44	0.64	1864.75	1-66	0
1	64	VP_CARRIL_1	LinMoving	Max T	-3.51	-63.90	0.03	121.68	0.69	1449.60	1-67	0
1	65	VP_CARRIL_1	LinMoving	Max T	-3.03	-41.92	0.04	84.97	0.72	990.90	1-68	0
1	66	VP_CARRIL_1	LinMoving	Max T	-2.49	-19.91	0.05	54.13	0.71	488.39	1-69	0
1	67	VP_CARRIL_1	LinMoving	Max T	-1.14	-5.55	0.03	20.80	0.33	140.91	1-70	0
1	67.5	VP_CARRIL_1	LinMoving	Max T	-1.14	-5.55	0.03	20.80	0.32	143.76	1-71	0
1	68.5	VP_CARRIL_1	LinMoving	Max T	0.00	-300.00	0.00	750.00	0.00	-149.70	1-72	0
1	0	VP_CARRIL_1	LinMoving	Min T	0.00	0.00	0.00	0.00	0.00	0.00	1-1	0
1	0.5	VP_CARRIL_1	LinMoving	Min T	-0.83	-5.46	-0.03	-15.42	0.29	-150.42	1-2	0
1	1.5	VP_CARRIL_1	LinMoving	Min T	-1.14	5.55	-0.03	-20.80	0.32	143.69	1-3	0
1	2	VP_CARRIL_1	LinMoving	Min T	-1.14	5.55	-0.03	-20.80	0.33	140.87	1-4	0
1	3	VP_CARRIL_1	LinMoving	Min T	-2.49	19.91	-0.05	-54.13	0.71	488.39	1-5	0
1	4	VP_CARRIL_1	LinMoving	Min T	-3.03	41.92	-0.04	-84.97	0.72	990.90	1-6	0
1	5	VP_CARRIL_1	LinMoving	Min T	-3.51	63.90	-0.03	-121.68	0.69	1449.60	1-7	0
1	6	VP_CARRIL_1	LinMoving	Min T	-3.92	85.81	-0.02	-159.44	0.64	1864.75	1-8	0
1	7	VP_CARRIL_1	LinMoving	Min T	-4.27	107.64	-0.01	-197.21	0.56	2236.69	1-9	0
1	8	VP_CARRIL_1	LinMoving	Min T	-4.55	129.36	0.01	-234.97	0.46	2565.87	1-10	0
1	9	VP_CARRIL_1	LinMoving	Min T	-4.79	150.94	0.02	-272.74	0.33	2852.80	1-11	0
1	10	VP_CARRIL_1	LinMoving	Min T	-4.97	172.37	0.03	-310.50	0.18	3098.11	1-12	0
1	11	VP_CARRIL_1	LinMoving	Min T	-5.10	193.62	0.05	-348.26	0.00	3302.51	1-13	0
1	12	VP_CARRIL_1	LinMoving	Min T	-5.18	214.66	0.06	-386.03	-0.21	3466.81	1-14	0
1	13	VP_CARRIL_1	LinMoving	Min T	-5.22	235.48	0.07	-423.79	-0.43	3591.89	1-15	0
1	14	VP_CARRIL_1	LinMoving	Min T	-5.21	256.04	0.08	-461.55	-0.69	3678.75	1-16	0
1	15	VP_CARRIL_1	LinMoving	Min T	-5.17	276.34	0.10	-499.32	-0.97	3728.48	1-17	0
1	16	VP_CARRIL_1	LinMoving	Min T	-5.08	296.33	0.11	-537.08	-1.27	3742.25	1-18	0
1	17	VP_CARRIL_1	LinMoving	Min T	-4.97	316.01	0.12	-574.84	-1.60	3721.32	1-19	0
1	18	VP_CARRIL_1	LinMoving	Min T	-4.82	335.35	0.13	-612.61	-1.96	3667.06	1-20	0
1	19	VP_CARRIL_1	LinMoving	Min T	-4.65	354.32	0.15	-650.37	-2.34	3580.92	1-21	0
1	20	VP_CARRIL_1	LinMoving	Min T	-4.45	372.90	0.16	-688.14	-2.75	3464.45	1-22	0
1	21	VP_CARRIL_1	LinMoving	Min T	-4.23	391.07	0.17	-725.90	-3.18	3319.29	1-23	0
1	22	VP_CARRIL_1	LinMoving	Min T	-3.98	408.80	0.18	-763.66	-3.63	3147.16	1-24	0
1	23	VP_CARRIL_1	LinMoving	Min T	-3.72	426.08	0.20	-801.43	-4.11	2949.89	1-25	0
1	24	VP_CARRIL_1	LinMoving	Min T	-3.45	442.87	0.21	-839.19	-4.62	2729.40	1-26	0
1	25	VP_CARRIL_1	LinMoving	Min T	-3.17	459.16	0.22	-876.95	-5.15	2487.70	1-27	0
1	26	VP_CARRIL_1	LinMoving	Min T	-2.87	474.92	0.23	-914.72	-5.71	2226.88	1-28	0
1	27	VP_CARRIL_1	LinMoving	Min T	-2.57	490.13	0.25	-952.48	-6.29	1949.15	1-29	0
1	28	VP_CARRIL_1	LinMoving	Min T	-2.27	504.77	0.26	-990.24	-6.90	1656.79	1-30	0
1	29	VP_CARRIL_1	LinMoving	Min T	-1.97	518.81	0.27	-1028.01	-7.53	1352.19	1-31	0
1	30	VP_CARRIL_1	LinMoving	Min T	-1.67	532.23	0.28	-1065.77	-8.19	1037.80	1-32	0
1	31	VP_CARRIL_1	LinMoving	Min T	-1.37	545.00	0.30	-1103.54	-8.87	716.20	1-33	0
1	32	VP_CARRIL_1	LinMoving	Min T	-0.81	568.53	0.32	-1179.06	-9.99	630.63	1-34	0
1	33	VP_CARRIL_1	LinMoving	Min T	-0.55	579.23	0.34	-1216.81	-10.74	314.45	1-35	0
1	33.75	VP_CARRIL_1	LinMoving	Min T	-0.55	579.23	0.34	-1216.81	-10.99	-119.98	1-36	0
1	34.5	VP_CARRIL_1	LinMoving	Min T	0.14	-8.62	-0.35	-205.18	-11.64	-293.07	1-37	0
1	35.25	VP_CARRIL_1	LinMoving	Min T	-0.05	-0.23	-0.35	-217.52	-11.56	-7.74	1-38	0
1	36	VP_CARRIL_1	LinMoving	Min T	-0.26	8.88	-0.35	-242.15	-11.16	288.32	1-39	0
1	37	VP_CARRIL_1	LinMoving	Min T	-0.50	18.71	-0.34	-276.11	-10.48	588.98	1-40	0
1	38	VP_CARRIL_1	LinMoving	Min T	-0.76	29.28	-0.33	-313.38	-9.75	892.14	1-41	0
1	39	VP_CARRIL_1	LinMoving	Min T	-1.03	40.55	-0.31	-351.15	-9.04	1195.28	1-42	0
1	40	VP_CARRIL_1	LinMoving	Min T	-1.32	52.52	-0.30	-388.91	-8.35	1495.66	1-43	0
1	41	VP_CARRIL_1	LinMoving	Min T	-1.61	65.17	-0.29	-426.68	-7.69	1790.54	1-44	0
1	42	VP_CARRIL_1	LinMoving	Min T	-1.91	78.46	-0.27	-464.44	-7.06	2077.32	1-45	0

ESTRUCTURA E1. ESFUERZOS EN TABLERO PARA TODOS LOS CASOS E HIPOTESIS DE CARGA

Frame	Station	OutputCase	CaseType	StepType	P	V2	V3	T	M2	M3	FrameElem	ElemStation
Text	m	Text	Text	Text	KN	KN	KN	KN-m	KN-m	KN-m	Text	m
1	43	VP_CARRIL_1	LinMoving	Min T	-2.21	92.38	-0.26	-502.20	-6.45	2353.45	1-46	0
1	44	VP_CARRIL_1	LinMoving	Min T	-2.51	106.90	-0.25	-539.97	-5.86	2616.49	1-47	0
1	45	VP_CARRIL_1	LinMoving	Min T	-2.81	121.99	-0.24	-577.73	-5.30	2864.10	1-48	0
1	46	VP_CARRIL_1	LinMoving	Min T	-3.11	137.65	-0.22	-615.49	-4.77	3094.02	1-49	0
1	47	VP_CARRIL_1	LinMoving	Min T	-3.40	153.83	-0.21	-653.26	-4.26	3304.09	1-50	0
1	48	VP_CARRIL_1	LinMoving	Min T	-3.67	170.53	-0.20	-691.02	-3.77	3492.24	1-51	0
1	49	VP_CARRIL_1	LinMoving	Min T	-3.93	187.71	-0.19	-728.79	-3.32	3656.49	1-52	0
1	50	VP_CARRIL_1	LinMoving	Min T	-4.18	205.35	-0.17	-766.55	-2.88	3794.96	1-53	0
1	51	VP_CARRIL_1	LinMoving	Min T	-4.41	223.44	-0.16	-804.31	-2.47	3905.85	1-54	0
1	52	VP_CARRIL_1	LinMoving	Min T	-4.61	241.94	-0.15	-842.08	-2.09	3987.48	1-55	0
1	53	VP_CARRIL_1	LinMoving	Min T	-4.79	260.83	-0.14	-879.84	-1.73	4038.22	1-56	0
1	54	VP_CARRIL_1	LinMoving	Min T	-4.94	280.09	-0.12	-917.60	-1.40	4056.58	1-57	0
1	55	VP_CARRIL_1	LinMoving	Min T	-5.06	299.71	-0.11	-955.37	-1.09	4041.12	1-58	0
1	56	VP_CARRIL_1	LinMoving	Min T	-5.15	319.64	-0.10	-993.13	-0.81	3990.52	1-59	0
1	57	VP_CARRIL_1	LinMoving	Min T	-5.21	339.88	-0.09	-1030.90	-0.55	3903.54	1-60	0
1	58	VP_CARRIL_1	LinMoving	Min T	-5.22	360.39	-0.07	-1068.66	-0.32	3779.05	1-61	0
1	59	VP_CARRIL_1	LinMoving	Min T	-5.19	381.16	-0.06	-1106.42	-0.12	3619.98	1-62	0
1	60	VP_CARRIL_1	LinMoving	Min T	-5.12	402.16	-0.05	-1144.19	0.07	3413.39	1-63	0
1	61	VP_CARRIL_1	LinMoving	Min T	-5.00	423.37	-0.03	-1181.95	0.22	3170.40	1-64	0
1	62	VP_CARRIL_1	LinMoving	Min T	-4.83	444.76	-0.02	-1219.71	0.35	2886.25	1-65	0
1	63	VP_CARRIL_1	LinMoving	Min T	-4.61	466.31	-0.01	-1257.48	0.46	2560.26	1-66	0
1	64	VP_CARRIL_1	LinMoving	Min T	-4.33	488.01	0.00	-1295.24	0.54	2191.84	1-67	0
1	65	VP_CARRIL_1	LinMoving	Min T	-3.99	509.82	0.02	-1333.01	0.59	1780.48	1-68	0
1	66	VP_CARRIL_1	LinMoving	Min T	-3.59	531.72	0.03	-1370.77	0.62	1325.81	1-69	0
1	67	VP_CARRIL_1	LinMoving	Min T	-3.13	553.69	0.04	-1408.53	0.63	827.61	1-70	0
1	67.5	VP_CARRIL_1	LinMoving	Min T	-3.13	553.69	0.04	-1408.53	0.61	550.99	1-71	0
1	68.5	VP_CARRIL_1	LinMoving	Min T	0.00	0.00	0.00	0.00	0.00	0.00	1-72	0
1	0	VP_CARRIL_1	LinMoving	Max M2	0.00	0.00	0.00	0.00	0.00	0.00	1-1	0
1	0.5	VP_CARRIL_1	LinMoving	Max M2	-2.02	-297.71	-0.06	711.06	0.59	-151.44	1-2	0
1	1.5	VP_CARRIL_1	LinMoving	Max M2	-2.02	-57.72	-0.06	111.09	0.64	26.36	1-3	0
1	2	VP_CARRIL_1	LinMoving	Max M2	-2.02	-57.72	-0.06	111.09	0.67	55.15	1-4	0
1	3	VP_CARRIL_1	LinMoving	Max M2	-2.02	2.29	-0.06	-38.94	0.73	52.92	1-5	0
1	4	VP_CARRIL_1	LinMoving	Max M2	-2.02	2.29	-0.06	-38.94	0.79	50.63	1-6	0
1	5	VP_CARRIL_1	LinMoving	Max M2	-2.02	2.29	-0.06	-38.94	0.84	48.34	1-7	0
1	6	VP_CARRIL_1	LinMoving	Max M2	-2.02	2.29	-0.06	-38.94	0.90	46.05	1-8	0
1	7	VP_CARRIL_1	LinMoving	Max M2	-2.02	2.29	-0.06	-38.94	0.96	43.76	1-9	0
1	8	VP_CARRIL_1	LinMoving	Max M2	-2.02	2.29	-0.06	-38.94	1.01	41.47	1-10	0
1	9	VP_CARRIL_1	LinMoving	Max M2	-2.02	2.29	-0.06	-38.94	1.07	39.18	1-11	0
1	10	VP_CARRIL_1	LinMoving	Max M2	-2.02	2.29	-0.06	-38.94	1.13	36.89	1-12	0
1	11	VP_CARRIL_1	LinMoving	Max M2	-2.02	2.29	-0.06	-38.94	1.18	34.60	1-13	0
1	12	VP_CARRIL_1	LinMoving	Max M2	-2.02	2.29	-0.06	-38.94	1.24	32.31	1-14	0
1	13	VP_CARRIL_1	LinMoving	Max M2	-2.02	2.29	-0.06	-38.94	1.30	30.02	1-15	0
1	14	VP_CARRIL_1	LinMoving	Max M2	-2.02	2.29	-0.06	-38.94	1.36	27.73	1-16	0
1	15	VP_CARRIL_1	LinMoving	Max M2	-2.02	2.29	-0.06	-38.94	1.41	25.44	1-17	0
1	16	VP_CARRIL_1	LinMoving	Max M2	-2.02	2.29	-0.06	-38.94	1.47	23.15	1-18	0
1	17	VP_CARRIL_1	LinMoving	Max M2	-2.02	2.29	-0.06	-38.94	1.53	20.86	1-19	0
1	18	VP_CARRIL_1	LinMoving	Max M2	-2.02	2.29	-0.06	-38.94	1.58	18.57	1-20	0
1	19	VP_CARRIL_1	LinMoving	Max M2	-2.02	2.29	-0.06	-38.94	1.64	16.28	1-21	0
1	20	VP_CARRIL_1	LinMoving	Max M2	-2.02	2.29	-0.06	-38.94	1.70	13.99	1-22	0
1	21	VP_CARRIL_1	LinMoving	Max M2	-2.02	2.29	-0.06	-38.94	1.75	11.70	1-23	0
1	22	VP_CARRIL_1	LinMoving	Max M2	-2.02	2.29	-0.06	-38.94	1.81	9.41	1-24	0
1	23	VP_CARRIL_1	LinMoving	Max M2	-2.02	2.29	-0.06	-38.94	1.87	7.12	1-25	0
1	24	VP_CARRIL_1	LinMoving	Max M2	-2.02	2.29	-0.06	-38.94	1.92	4.83	1-26	0
1	25	VP_CARRIL_1	LinMoving	Max M2	-2.02	2.29	-0.06	-38.94	1.98	2.54	1-27	0
1	26	VP_CARRIL_1	LinMoving	Max M2	-2.02	2.29	-0.06	-38.94	2.04	0.25	1-28	0
1	27	VP_CARRIL_1	LinMoving	Max M2	-2.02	2.29	-0.06	-38.94	2.10	-2.04	1-29	0
1	28	VP_CARRIL_1	LinMoving	Max M2	-2.02	2.29	-0.06	-38.94	2.15	-4.32	1-30	0
1	29	VP_CARRIL_1	LinMoving	Max M2	-2.02	2.29	-0.06	-38.94	2.21	-6.61	1-31	0
1	30	VP_CARRIL_1	LinMoving	Max M2	-2.02	2.29	-0.06	-38.94	2.27	-8.90	1-32	0
1	31	VP_CARRIL_1	LinMoving	Max M2	-2.02	2.29	-0.06	-38.94	2.32	-11.19	1-33	0
1	32	VP_CARRIL_1	LinMoving	Max M2	-2.02	2.29	-0.06	-38.94	2.38	-13.48	1-34	0
1	33	VP_CARRIL_1	LinMoving	Max M2	-2.02	2.29	-0.06	-38.94	2.44	-15.70	1-35	0
1	33.75	VP_CARRIL_1	LinMoving	Max M2	-2.02	2.29	-0.06	-38.94	2.48	-17.41	1-36	0
1	34.5	VP_CARRIL_1	LinMoving	Max M2	-2.02	-2.29	0.06	38.94	2.53	-19.13	1-37	0
1	35.25	VP_CARRIL_1	LinMoving	Max M2	-2.02	-2.29	0.06	38.94	2.49	-17.41	1-38	0
1	36	VP_CARRIL_1	LinMoving	Max M2	-2.02	-2.29	0.06	38.93	2.45	-15.77	1-39	0
1	37	VP_CARRIL_1	LinMoving	Max M2	-2.02	-2.29	0.06	38.93	2.39	-13.48	1-40	0
1	38	VP_CARRIL_1	LinMoving	Max M2	-2.02	-2.29	0.06	38.93	2.33	-11.19	1-41	0
1	39	VP_CARRIL_1	LinMoving	Max M2	-2.02	-2.29	0.06	38.93	2.28	-8.90	1-42	0
1	40	VP_CARRIL_1	LinMoving	Max M2	-2.02	-2.29	0.06	38.93	2.22	-6.61	1-43	0
1	41	VP_CARRIL_1	LinMoving	Max M2	-2.02	-2.29	0.06	38.93	2.16	-4.32	1-44	0
1	42	VP_CARRIL_1	LinMoving	Max M2	-2.02	-2.29	0.06	38.93	2.10	-2.03	1-45	0
1	43	VP_CARRIL_1	LinMoving	Max M2	-2.02	-2.29	0.06	38.93	2.05	0.26	1-46	0
1	44	VP_CARRIL_1	LinMoving	Max M2	-2.02	-2.29	0.06	38.93	1.99	2.55	1-47	0
1	45	VP_CARRIL_1	LinMoving	Max M2	-2.02	-2.29	0.06	38.93	1.93	4.83	1-48	0
1	46	VP_CARRIL_1	LinMoving	Max M2	-2.02	-2.29	0.06	38.93	1.87	7.12	1-49	0
1	47	VP_CARRIL_1	LinMoving	Max M2	-2.02	-2.29	0.06	38.93	1.82	9.41	1-50	0
1	48	VP_CARRIL_1	LinMoving	Max M2	-2.02	-2.29	0.06	38.93	1.76	11.70	1-51	0
1	49	VP_CARRIL_1	LinMoving	Max M2	-2.02	-2.29	0.06	38.93	1.70	13.99	1-52	0
1	50	VP_CARRIL_1	LinMoving	Max M2	-2.02	-2.29	0.06	38.93	1.65	16.28	1-53	0
1	51	VP_CARRIL_1	LinMoving	Max M2	-2.02	-2.29	0.06	38.93	1.59	18.57	1-54	0

ESTRUCTURA E1. ESFUERZOS EN TABLERO PARA TODOS LOS CASOS E HIPOTESIS DE CARGA

Frame	Station	OutputCase	CaseType	StepType	P	V2	V3	T	M2	M3	FrameElem	ElemStation
Text	m	Text	Text	Text	KN	KN	KN	KN-m	KN-m	KN-m	Text	m
1	52	VP_CARRIL_1	LinMoving	Max M2	-2.02	-2.29	0.06	38.93	1.53	20.86	1-55	0
1	53	VP_CARRIL_1	LinMoving	Max M2	-2.02	-2.29	0.06	38.93	1.47	23.15	1-56	0
1	54	VP_CARRIL_1	LinMoving	Max M2	-2.02	-2.29	0.06	38.93	1.42	25.44	1-57	0
1	55	VP_CARRIL_1	LinMoving	Max M2	-2.02	-2.29	0.06	38.93	1.36	27.73	1-58	0
1	56	VP_CARRIL_1	LinMoving	Max M2	-2.02	-2.29	0.06	38.93	1.30	30.02	1-59	0
1	57	VP_CARRIL_1	LinMoving	Max M2	-2.02	-2.29	0.06	38.93	1.24	32.31	1-60	0
1	58	VP_CARRIL_1	LinMoving	Max M2	-2.02	-2.29	0.06	38.93	1.19	34.60	1-61	0
1	59	VP_CARRIL_1	LinMoving	Max M2	-2.02	-2.29	0.06	38.93	1.13	36.89	1-62	0
1	60	VP_CARRIL_1	LinMoving	Max M2	-2.02	-2.29	0.06	38.93	1.07	39.18	1-63	0
1	61	VP_CARRIL_1	LinMoving	Max M2	-2.02	-2.29	0.06	38.93	1.02	41.47	1-64	0
1	62	VP_CARRIL_1	LinMoving	Max M2	-2.02	-2.29	0.06	38.93	0.96	43.76	1-65	0
1	63	VP_CARRIL_1	LinMoving	Max M2	-2.02	-2.29	0.06	38.93	0.90	46.05	1-66	0
1	64	VP_CARRIL_1	LinMoving	Max M2	-2.02	-2.29	0.06	38.93	0.84	48.34	1-67	0
1	65	VP_CARRIL_1	LinMoving	Max M2	-2.02	-2.29	0.06	38.93	0.79	50.63	1-68	0
1	66	VP_CARRIL_1	LinMoving	Max M2	-2.02	-2.29	0.06	38.93	0.73	52.92	1-69	0
1	67	VP_CARRIL_1	LinMoving	Max M2	-2.02	57.72	0.06	-111.09	0.67	55.22	1-70	0
1	67.5	VP_CARRIL_1	LinMoving	Max M2	-2.02	57.72	0.06	-111.09	0.64	26.50	1-71	0
1	68.5	VP_CARRIL_1	LinMoving	Max M2	0.00	0.00	0.00	0.00	0.00	0.00	1-72	0
1	0	VP_CARRIL_1	LinMoving	Min M2	0.00	0.00	0.00	0.00	0.00	0.00	1-1	0
1	0.5	VP_CARRIL_1	LinMoving	Min M2	0.00	0.00	0.00	0.00	0.00	0.00	1-2	0
1	1.5	VP_CARRIL_1	LinMoving	Min M2	-0.05	0.23	0.35	217.52	-0.24	-0.47	1-3	0
1	2	VP_CARRIL_1	LinMoving	Min M2	-0.05	0.23	0.35	217.51	-0.42	-0.39	1-4	0
1	3	VP_CARRIL_1	LinMoving	Min M2	-0.05	0.23	0.35	217.51	-0.77	-0.62	1-5	0
1	4	VP_CARRIL_1	LinMoving	Min M2	-0.05	0.23	0.35	217.51	-1.12	-0.85	1-6	0
1	5	VP_CARRIL_1	LinMoving	Min M2	-0.05	0.23	0.35	217.51	-1.47	-1.09	1-7	0
1	6	VP_CARRIL_1	LinMoving	Min M2	-0.05	0.23	0.35	217.51	-1.82	-1.32	1-8	0
1	7	VP_CARRIL_1	LinMoving	Min M2	-0.05	0.23	0.35	217.51	-2.17	-1.55	1-9	0
1	8	VP_CARRIL_1	LinMoving	Min M2	-0.05	0.23	0.35	217.51	-2.52	-1.78	1-10	0
1	9	VP_CARRIL_1	LinMoving	Min M2	-0.05	0.23	0.35	217.51	-2.87	-2.01	1-11	0
1	10	VP_CARRIL_1	LinMoving	Min M2	-0.05	0.23	0.35	217.51	-3.22	-2.24	1-12	0
1	11	VP_CARRIL_1	LinMoving	Min M2	-0.05	0.23	0.35	217.51	-3.58	-2.47	1-13	0
1	12	VP_CARRIL_1	LinMoving	Min M2	-0.05	0.23	0.35	217.51	-3.93	-2.71	1-14	0
1	13	VP_CARRIL_1	LinMoving	Min M2	-0.05	0.23	0.35	217.51	-4.28	-2.94	1-15	0
1	14	VP_CARRIL_1	LinMoving	Min M2	-0.05	0.23	0.35	217.51	-4.63	-3.17	1-16	0
1	15	VP_CARRIL_1	LinMoving	Min M2	-0.05	0.23	0.35	217.51	-4.98	-3.40	1-17	0
1	16	VP_CARRIL_1	LinMoving	Min M2	-0.05	0.23	0.35	217.51	-5.33	-3.63	1-18	0
1	17	VP_CARRIL_1	LinMoving	Min M2	-0.05	0.23	0.35	217.51	-5.68	-3.86	1-19	0
1	18	VP_CARRIL_1	LinMoving	Min M2	-0.05	0.23	0.35	217.51	-6.03	-4.09	1-20	0
1	19	VP_CARRIL_1	LinMoving	Min M2	-0.05	0.23	0.35	217.51	-6.38	-4.33	1-21	0
1	20	VP_CARRIL_1	LinMoving	Min M2	-0.05	0.23	0.35	217.51	-6.74	-4.56	1-22	0
1	21	VP_CARRIL_1	LinMoving	Min M2	-0.05	0.23	0.35	217.51	-7.09	-4.79	1-23	0
1	22	VP_CARRIL_1	LinMoving	Min M2	-0.05	0.23	0.35	217.51	-7.44	-5.02	1-24	0
1	23	VP_CARRIL_1	LinMoving	Min M2	-0.05	0.23	0.35	217.51	-7.79	-5.25	1-25	0
1	24	VP_CARRIL_1	LinMoving	Min M2	-0.05	0.23	0.35	217.51	-8.14	-5.48	1-26	0
1	25	VP_CARRIL_1	LinMoving	Min M2	-0.05	0.23	0.35	217.51	-8.49	-5.71	1-27	0
1	26	VP_CARRIL_1	LinMoving	Min M2	-0.05	0.23	0.35	217.51	-8.84	-5.95	1-28	0
1	27	VP_CARRIL_1	LinMoving	Min M2	-0.05	0.23	0.35	217.51	-9.19	-6.18	1-29	0
1	28	VP_CARRIL_1	LinMoving	Min M2	-0.05	0.23	0.35	217.51	-9.54	-6.41	1-30	0
1	29	VP_CARRIL_1	LinMoving	Min M2	-0.05	0.23	0.35	217.51	-9.90	-6.64	1-31	0
1	30	VP_CARRIL_1	LinMoving	Min M2	-0.05	0.23	0.35	217.51	-10.25	-6.87	1-32	0
1	31	VP_CARRIL_1	LinMoving	Min M2	-0.05	0.23	0.35	217.51	-10.60	-7.10	1-33	0
1	32	VP_CARRIL_1	LinMoving	Min M2	-0.05	0.23	0.35	217.51	-10.95	-7.33	1-34	0
1	33	VP_CARRIL_1	LinMoving	Min M2	-0.05	0.23	0.35	217.52	-11.30	-7.56	1-35	0
1	33.75	VP_CARRIL_1	LinMoving	Min M2	-0.05	0.23	0.35	217.52	-11.56	-7.74	1-36	0
1	34.5	VP_CARRIL_1	LinMoving	Min M2	-0.05	-300.23	-0.35	532.48	-11.83	-157.91	1-37	0
1	35.25	VP_CARRIL_1	LinMoving	Min M2	-0.05	-0.23	-0.35	-217.52	-11.56	-7.74	1-38	0
1	36	VP_CARRIL_1	LinMoving	Min M2	-0.05	-0.23	-0.35	-217.51	-11.30	-7.56	1-39	0
1	37	VP_CARRIL_1	LinMoving	Min M2	-0.05	-0.23	-0.35	-217.51	-10.95	-7.33	1-40	0
1	38	VP_CARRIL_1	LinMoving	Min M2	-0.05	-0.23	-0.35	-217.51	-10.60	-7.10	1-41	0
1	39	VP_CARRIL_1	LinMoving	Min M2	-0.05	-0.23	-0.35	-217.51	-10.25	-6.87	1-42	0
1	40	VP_CARRIL_1	LinMoving	Min M2	-0.05	-0.23	-0.35	-217.51	-9.90	-6.64	1-43	0
1	41	VP_CARRIL_1	LinMoving	Min M2	-0.05	-0.23	-0.35	-217.51	-9.54	-6.41	1-44	0
1	42	VP_CARRIL_1	LinMoving	Min M2	-0.05	-0.23	-0.35	-217.51	-9.19	-6.18	1-45	0
1	43	VP_CARRIL_1	LinMoving	Min M2	-0.05	-0.23	-0.35	-217.51	-8.84	-5.94	1-46	0
1	44	VP_CARRIL_1	LinMoving	Min M2	-0.05	-0.23	-0.35	-217.51	-8.49	-5.71	1-47	0
1	45	VP_CARRIL_1	LinMoving	Min M2	-0.05	-0.23	-0.35	-217.51	-8.14	-5.48	1-48	0
1	46	VP_CARRIL_1	LinMoving	Min M2	-0.05	-0.23	-0.35	-217.51	-7.79	-5.25	1-49	0
1	47	VP_CARRIL_1	LinMoving	Min M2	-0.05	-0.23	-0.35	-217.51	-7.44	-5.02	1-50	0
1	48	VP_CARRIL_1	LinMoving	Min M2	-0.05	-0.23	-0.35	-217.51	-7.09	-4.79	1-51	0
1	49	VP_CARRIL_1	LinMoving	Min M2	-0.05	-0.23	-0.35	-217.51	-6.74	-4.56	1-52	0
1	50	VP_CARRIL_1	LinMoving	Min M2	-0.05	-0.23	-0.35	-217.51	-6.38	-4.33	1-53	0
1	51	VP_CARRIL_1	LinMoving	Min M2	-0.05	-0.23	-0.35	-217.51	-6.03	-4.09	1-54	0
1	52	VP_CARRIL_1	LinMoving	Min M2	-0.05	-0.23	-0.35	-217.51	-5.68	-3.86	1-55	0
1	53	VP_CARRIL_1	LinMoving	Min M2	-0.05	-0.23	-0.35	-217.51	-5.33	-3.63	1-56	0
1	54	VP_CARRIL_1	LinMoving	Min M2	-0.05	-0.23	-0.35	-217.51	-4.98	-3.40	1-57	0
1	55	VP_CARRIL_1	LinMoving	Min M2	-0.05	-0.23	-0.35	-217.51	-4.63	-3.17	1-58	0
1	56	VP_CARRIL_1	LinMoving	Min M2	-0.05	-0.23	-0.35	-217.51	-4.28	-2.94	1-59	0
1	57	VP_CARRIL_1	LinMoving	Min M2	-0.05	-0.23	-0.35	-217.51	-3.93	-2.71	1-60	0
1	58	VP_CARRIL_1	LinMoving	Min M2	-0.05	-0.23	-0.35	-217.51	-3.58	-2.47	1-61	0
1	59	VP_CARRIL_1	LinMoving	Min M2	-0.05	-0.23	-0.35	-217.51	-3.23	-2.24	1-62	0
1	60	VP_CARRIL_1	LinMoving	Min M2	-0.05	-0.23	-0.35	-217.51	-2.87	-2.01	1-63	0

ESTRUCTURA E1. ESFUERZOS EN TABLERO PARA TODOS LOS CASOS E HIPOTESIS DE CARGA

Frame	Station	OutputCase	CaseType	StepType	P	V2	V3	T	M2	M3	FrameElem	ElemStation
Text	m	Text	Text	Text	KN	KN	KN	KN-m	KN-m	KN-m	Text	m
1	61	VP_CARRIL_1	LinMoving	Min M2	-0.05	-0.23	-0.35	-217.51	-2.52	-1.78	1-64	0
1	62	VP_CARRIL_1	LinMoving	Min M2	-0.05	-0.23	-0.35	-217.51	-2.17	-1.55	1-65	0
1	63	VP_CARRIL_1	LinMoving	Min M2	-0.05	-0.23	-0.35	-217.51	-1.82	-1.32	1-66	0
1	64	VP_CARRIL_1	LinMoving	Min M2	-0.05	-0.23	-0.35	-217.51	-1.47	-1.09	1-67	0
1	65	VP_CARRIL_1	LinMoving	Min M2	-0.05	-0.23	-0.35	-217.51	-1.12	-0.85	1-68	0
1	66	VP_CARRIL_1	LinMoving	Min M2	-0.05	-0.23	-0.35	-217.51	-0.77	-0.62	1-69	0
1	67	VP_CARRIL_1	LinMoving	Min M2	-0.05	-0.23	-0.35	-217.52	-0.42	-0.39	1-70	0
1	67.5	VP_CARRIL_1	LinMoving	Min M2	-0.05	-0.23	-0.35	-217.55	-0.24	-0.47	1-71	0
1	68.5	VP_CARRIL_1	LinMoving	Min M2	0.00	0.00	0.00	0.00	0.00	0.00	1-72	0
1	0	VP_CARRIL_1	LinMoving	Max M3	0.00	0.00	0.00	0.00	0.00	0.00	1-1	0
1	0.5	VP_CARRIL_1	LinMoving	Max M3	0.47	35.00	0.30	180.85	0.10	0.40	1-2	0
1	1.5	VP_CARRIL_1	LinMoving	Max M3	-3.13	-553.69	-0.04	1408.53	0.61	550.77	1-3	0
1	2	VP_CARRIL_1	LinMoving	Max M3	-3.13	-553.69	-0.04	1408.53	0.63	827.49	1-4	0
1	3	VP_CARRIL_1	LinMoving	Max M3	-3.59	-531.72	-0.03	1370.77	0.62	1325.81	1-5	0
1	4	VP_CARRIL_1	LinMoving	Max M3	-3.99	-509.82	-0.02	1333.00	0.59	1780.48	1-6	0
1	5	VP_CARRIL_1	LinMoving	Max M3	-4.33	-488.01	0.00	1295.24	0.54	2191.83	1-7	0
1	6	VP_CARRIL_1	LinMoving	Max M3	-4.61	-466.31	0.01	1257.47	0.46	2560.26	1-8	0
1	7	VP_CARRIL_1	LinMoving	Max M3	-4.83	-444.76	0.02	1219.71	0.35	2886.25	1-9	0
1	8	VP_CARRIL_1	LinMoving	Max M3	-5.00	-423.37	0.04	1181.95	0.22	3170.40	1-10	0
1	9	VP_CARRIL_1	LinMoving	Max M3	-5.12	-402.16	0.05	1144.18	0.06	3413.39	1-11	0
1	10	VP_CARRIL_1	LinMoving	Max M3	-5.19	-381.16	0.06	1106.42	-0.12	3615.98	1-12	0
1	11	VP_CARRIL_1	LinMoving	Max M3	-5.22	-360.39	0.07	1068.66	-0.32	3779.05	1-13	0
1	12	VP_CARRIL_1	LinMoving	Max M3	-5.21	-339.88	0.09	1030.89	-0.56	3903.54	1-14	0
1	13	VP_CARRIL_1	LinMoving	Max M3	-5.15	-319.64	0.10	993.13	-0.81	3990.52	1-15	0
1	14	VP_CARRIL_1	LinMoving	Max M3	-5.06	-299.71	0.11	955.37	-1.10	4041.12	1-16	0
1	15	VP_CARRIL_1	LinMoving	Max M3	-4.94	-280.09	0.12	917.60	-1.40	4056.58	1-17	0
1	16	VP_CARRIL_1	LinMoving	Max M3	-4.79	-260.83	0.14	879.84	-1.74	4038.22	1-18	0
1	17	VP_CARRIL_1	LinMoving	Max M3	-4.82	35.35	0.13	137.39	-1.83	4002.26	1-19	0
1	18	VP_CARRIL_1	LinMoving	Max M3	-4.65	54.32	0.15	99.63	-2.19	3935.10	1-20	0
1	19	VP_CARRIL_1	LinMoving	Max M3	-4.45	72.90	0.16	61.86	-2.59	3837.22	1-21	0
1	20	VP_CARRIL_1	LinMoving	Max M3	-4.23	91.07	0.17	24.10	-3.01	3710.23	1-22	0
1	21	VP_CARRIL_1	LinMoving	Max M3	-3.98	108.80	0.18	-13.66	-3.45	3555.84	1-23	0
1	22	VP_CARRIL_1	LinMoving	Max M3	-3.72	126.08	0.20	-51.43	-3.92	3375.86	1-24	0
1	23	VP_CARRIL_1	LinMoving	Max M3	-3.45	142.87	0.21	-89.19	-4.41	3172.17	1-25	0
1	24	VP_CARRIL_1	LinMoving	Max M3	-3.17	159.16	0.22	-126.95	-4.93	2946.77	1-26	0
1	25	VP_CARRIL_1	LinMoving	Max M3	-2.87	174.92	0.23	-164.72	-5.48	2701.72	1-27	0
1	26	VP_CARRIL_1	LinMoving	Max M3	-2.57	190.13	0.25	-202.48	-6.05	2439.21	1-28	0
1	27	VP_CARRIL_1	LinMoving	Max M3	-2.27	204.77	0.26	-240.24	-6.64	2161.50	1-29	0
1	28	VP_CARRIL_1	LinMoving	Max M3	-1.97	218.81	0.27	-278.01	-7.26	1870.94	1-30	0
1	29	VP_CARRIL_1	LinMoving	Max M3	-1.67	232.23	0.28	-315.77	-7.91	1569.98	1-31	0
1	30	VP_CARRIL_1	LinMoving	Max M3	-1.37	245.00	0.30	-353.54	-8.58	1261.17	1-32	0
1	31	VP_CARRIL_1	LinMoving	Max M3	-1.09	257.11	0.31	-391.30	-9.27	947.13	1-33	0
1	32	VP_CARRIL_1	LinMoving	Max M3	-0.81	568.53	0.32	-1179.06	-9.99	630.63	1-34	0
1	33	VP_CARRIL_1	LinMoving	Max M3	-0.55	579.23	0.34	-1216.81	-10.74	314.45	1-35	0
1	33.75	VP_CARRIL_1	LinMoving	Max M3	-0.08	-2.50	0.18	113.82	-5.80	82.90	1-36	0
1	34.5	VP_CARRIL_1	LinMoving	Max M3	-0.59	1.06	0.04	-2.54	1.29	35.42	1-37	0
1	35.25	VP_CARRIL_1	LinMoving	Max M3	-0.08	2.50	-0.18	-113.82	-5.80	82.90	1-38	0
1	36	VP_CARRIL_1	LinMoving	Max M3	-0.55	-279.23	-0.34	466.83	-10.74	314.42	1-39	0
1	37	VP_CARRIL_1	LinMoving	Max M3	-0.81	-268.53	-0.32	429.06	-9.99	630.61	1-40	0
1	38	VP_CARRIL_1	LinMoving	Max M3	-1.09	-257.11	-0.31	391.30	-9.27	947.13	1-41	0
1	39	VP_CARRIL_1	LinMoving	Max M3	-1.37	-245.00	-0.30	353.53	-8.58	1261.17	1-42	0
1	40	VP_CARRIL_1	LinMoving	Max M3	-1.67	-232.23	-0.28	315.77	-7.91	1569.98	1-43	0
1	41	VP_CARRIL_1	LinMoving	Max M3	-1.97	-218.81	-0.27	278.01	-7.26	1870.94	1-44	0
1	42	VP_CARRIL_1	LinMoving	Max M3	-2.27	-204.77	-0.26	240.24	-6.64	2161.50	1-45	0
1	43	VP_CARRIL_1	LinMoving	Max M3	-2.57	-190.13	-0.25	202.48	-6.04	2439.21	1-46	0
1	44	VP_CARRIL_1	LinMoving	Max M3	-2.87	-174.92	-0.23	164.72	-5.47	2701.72	1-47	0
1	45	VP_CARRIL_1	LinMoving	Max M3	-3.17	-159.16	-0.22	126.95	-4.93	2946.77	1-48	0
1	46	VP_CARRIL_1	LinMoving	Max M3	-3.45	-142.87	-0.21	89.19	-4.41	3172.17	1-49	0
1	47	VP_CARRIL_1	LinMoving	Max M3	-3.72	-126.08	-0.20	51.42	-3.92	3375.86	1-50	0
1	48	VP_CARRIL_1	LinMoving	Max M3	-3.98	-108.80	-0.18	13.66	-3.45	3555.84	1-51	0
1	49	VP_CARRIL_1	LinMoving	Max M3	-4.23	-91.07	-0.17	-24.10	-3.00	3710.23	1-52	0
1	50	VP_CARRIL_1	LinMoving	Max M3	-4.45	-72.90	-0.16	-61.87	-2.59	3837.22	1-53	0
1	51	VP_CARRIL_1	LinMoving	Max M3	-4.65	-54.32	-0.15	-99.63	-2.19	3935.10	1-54	0
1	52	VP_CARRIL_1	LinMoving	Max M3	-4.82	-35.35	-0.13	-137.39	-1.82	4002.26	1-55	0
1	53	VP_CARRIL_1	LinMoving	Max M3	-4.79	260.83	-0.14	-879.84	-1.73	4038.22	1-56	0
1	54	VP_CARRIL_1	LinMoving	Max M3	-4.94	280.09	-0.12	-917.60	-1.40	4056.58	1-57	0
1	55	VP_CARRIL_1	LinMoving	Max M3	-5.06	299.71	-0.11	-955.37	-1.09	4041.12	1-58	0
1	56	VP_CARRIL_1	LinMoving	Max M3	-5.15	319.64	-0.10	-993.13	-0.81	3990.52	1-59	0
1	57	VP_CARRIL_1	LinMoving	Max M3	-5.21	339.88	-0.09	-1030.90	-0.55	3903.54	1-60	0
1	58	VP_CARRIL_1	LinMoving	Max M3	-5.22	360.39	-0.07	-1068.66	-0.32	3779.05	1-61	0
1	59	VP_CARRIL_1	LinMoving	Max M3	-5.19	381.16	-0.06	-1106.42	-0.12	3615.98	1-62	0
1	60	VP_CARRIL_1	LinMoving	Max M3	-5.12	402.16	-0.05	-1144.19	0.07	3413.39	1-63	0
1	61	VP_CARRIL_1	LinMoving	Max M3	-5.00	423.37	-0.03	-1181.95	0.22	3170.40	1-64	0
1	62	VP_CARRIL_1	LinMoving	Max M3	-4.83	444.76	-0.02	-1219.71	0.35	2886.25	1-65	0
1	63	VP_CARRIL_1	LinMoving	Max M3	-4.61	466.31	-0.01	-1257.48	0.46	2560.26	1-66	0
1	64	VP_CARRIL_1	LinMoving	Max M3	-4.33	488.01	0.00	-1295.24	0.54	2191.84	1-67	0
1	65	VP_CARRIL_1	LinMoving	Max M3	-3.99	509.82	0.02	-1333.01	0.59	1780.48	1-68	0
1	66	VP_CARRIL_1	LinMoving	Max M3	-3.59	531.72	0.03	-1370.77	0.62	1325.81	1-69	0
1	67	VP_CARRIL_1	LinMoving	Max M3	-3.13	553.69	0.04	-1408.53	0.63	827.61	1-70	0
1	67.5	VP_CARRIL_1	LinMoving	Max M3	-3.13	553.69	0.04	-1408.53	0.61	550.99	1-71	0
1	68.5	VP_CARRIL_1	LinMoving	Max M3	0.00	0.00	0.00	0.00	0.00	0.00	1-72	0

ESTRUCTURA E1. ESFUERZOS EN TABLERO PARA TODOS LOS CASOS E HIPOTESIS DE CARGA

Frame	Station	OutputCase	CaseType	StepType	P	V2	V3	T	M2	M3	FrameElem	ElemStation
Text	m	Text	Text	Text	KN	KN	KN	KN-m	KN-m	KN-m	Text	m
1	0	VP_CARRIL_1	LinMoving	Min M3	0.00	0.00	0.00	0.00	0.00	0.00	1-1	0
1	0.5	VP_CARRIL_1	LinMoving	Min M3	-2.02	-297.71	-0.06	711.06	0.59	-151.44	1-2	0
1	1.5	VP_CARRIL_1	LinMoving	Min M3	-0.83	-5.46	-0.03	-15.42	0.32	-145.01	1-3	0
1	2	VP_CARRIL_1	LinMoving	Min M3	-0.83	-5.46	-0.03	-15.42	0.34	-142.31	1-4	0
1	3	VP_CARRIL_1	LinMoving	Min M3	-0.50	57.59	0.17	120.19	-0.33	-144.46	1-5	0
1	4	VP_CARRIL_1	LinMoving	Min M3	-0.50	57.59	0.17	120.19	-0.49	-202.04	1-6	0
1	5	VP_CARRIL_1	LinMoving	Min M3	-0.37	57.62	0.18	125.14	-0.71	-259.66	1-7	0
1	6	VP_CARRIL_1	LinMoving	Min M3	-0.37	57.62	0.18	125.14	-0.88	-317.29	1-8	0
1	7	VP_CARRIL_1	LinMoving	Min M3	-0.37	57.62	0.18	125.14	-1.06	-374.91	1-9	0
1	8	VP_CARRIL_1	LinMoving	Min M3	-0.37	57.62	0.18	125.14	-1.24	-432.53	1-10	0
1	9	VP_CARRIL_1	LinMoving	Min M3	-0.37	57.62	0.18	125.14	-1.41	-490.15	1-11	0
1	10	VP_CARRIL_1	LinMoving	Min M3	-0.37	57.62	0.18	125.14	-1.59	-547.78	1-12	0
1	11	VP_CARRIL_1	LinMoving	Min M3	-0.37	57.62	0.18	125.14	-1.77	-605.40	1-13	0
1	12	VP_CARRIL_1	LinMoving	Min M3	-0.37	57.62	0.18	125.14	-1.95	-663.02	1-14	0
1	13	VP_CARRIL_1	LinMoving	Min M3	-0.37	57.62	0.18	125.14	-2.12	-720.64	1-15	0
1	14	VP_CARRIL_1	LinMoving	Min M3	-0.37	57.62	0.18	125.14	-2.30	-778.27	1-16	0
1	15	VP_CARRIL_1	LinMoving	Min M3	-0.37	57.62	0.18	125.14	-2.48	-835.89	1-17	0
1	16	VP_CARRIL_1	LinMoving	Min M3	-0.37	57.62	0.18	125.14	-2.65	-893.51	1-18	0
1	17	VP_CARRIL_1	LinMoving	Min M3	-0.37	57.62	0.18	125.14	-2.83	-951.14	1-19	0
1	18	VP_CARRIL_1	LinMoving	Min M3	-0.37	57.62	0.18	125.14	-3.01	-1008.76	1-20	0
1	19	VP_CARRIL_1	LinMoving	Min M3	-0.37	57.62	0.18	125.14	-3.18	-1066.38	1-21	0
1	20	VP_CARRIL_1	LinMoving	Min M3	-0.37	57.62	0.18	125.14	-3.36	-1124.00	1-22	0
1	21	VP_CARRIL_1	LinMoving	Min M3	-0.37	57.62	0.18	125.14	-3.54	-1181.63	1-23	0
1	22	VP_CARRIL_1	LinMoving	Min M3	-0.37	57.62	0.18	125.14	-3.71	-1239.25	1-24	0
1	23	VP_CARRIL_1	LinMoving	Min M3	-0.37	57.62	0.18	125.14	-3.89	-1296.87	1-25	0
1	24	VP_CARRIL_1	LinMoving	Min M3	-0.37	57.62	0.18	125.14	-4.07	-1354.49	1-26	0
1	25	VP_CARRIL_1	LinMoving	Min M3	-0.37	57.62	0.18	125.14	-4.24	-1412.12	1-27	0
1	26	VP_CARRIL_1	LinMoving	Min M3	-0.37	57.62	0.18	125.14	-4.42	-1469.74	1-28	0
1	27	VP_CARRIL_1	LinMoving	Min M3	-0.37	57.62	0.18	125.14	-4.60	-1527.36	1-29	0
1	28	VP_CARRIL_1	LinMoving	Min M3	-0.37	57.62	0.18	125.14	-4.77	-1584.99	1-30	0
1	29	VP_CARRIL_1	LinMoving	Min M3	-0.37	57.62	0.18	125.14	-4.95	-1642.61	1-31	0
1	30	VP_CARRIL_1	LinMoving	Min M3	-0.37	57.62	0.18	125.14	-5.13	-1700.23	1-32	0
1	31	VP_CARRIL_1	LinMoving	Min M3	-0.37	57.62	0.18	125.14	-5.31	-1757.85	1-33	0
1	32	VP_CARRIL_1	LinMoving	Min M3	-0.37	57.62	0.18	125.14	-5.48	-1815.48	1-34	0
1	33	VP_CARRIL_1	LinMoving	Min M3	-0.37	57.62	0.18	125.15	-5.66	-1873.10	1-35	0
1	33.75	VP_CARRIL_1	LinMoving	Min M3	-0.37	57.62	0.18	125.15	-5.79	-1918.30	1-36	0
1	34.5	VP_CARRIL_1	LinMoving	Min M3	-3.98	-408.80	-0.18	763.65	-5.92	-1964.70	1-37	0
1	35.25	VP_CARRIL_1	LinMoving	Min M3	-0.37	-57.62	-0.18	-125.15	-5.80	-1918.30	1-38	0
1	36	VP_CARRIL_1	LinMoving	Min M3	-0.37	-57.62	-0.18	-125.14	-5.66	-1873.10	1-39	0
1	37	VP_CARRIL_1	LinMoving	Min M3	-0.37	-57.62	-0.18	-125.14	-5.49	-1815.48	1-40	0
1	38	VP_CARRIL_1	LinMoving	Min M3	-0.37	-57.62	-0.18	-125.14	-5.31	-1757.85	1-41	0
1	39	VP_CARRIL_1	LinMoving	Min M3	-0.37	-57.62	-0.18	-125.14	-5.13	-1700.23	1-42	0
1	40	VP_CARRIL_1	LinMoving	Min M3	-0.37	-57.62	-0.18	-125.14	-4.96	-1642.61	1-43	0
1	41	VP_CARRIL_1	LinMoving	Min M3	-0.37	-57.62	-0.18	-125.14	-4.78	-1584.99	1-44	0
1	42	VP_CARRIL_1	LinMoving	Min M3	-0.37	-57.62	-0.18	-125.14	-4.60	-1527.36	1-45	0
1	43	VP_CARRIL_1	LinMoving	Min M3	-0.37	-57.62	-0.18	-125.14	-4.42	-1469.74	1-46	0
1	44	VP_CARRIL_1	LinMoving	Min M3	-0.37	-57.62	-0.18	-125.14	-4.25	-1412.12	1-47	0
1	45	VP_CARRIL_1	LinMoving	Min M3	-0.37	-57.62	-0.18	-125.14	-4.07	-1354.49	1-48	0
1	46	VP_CARRIL_1	LinMoving	Min M3	-0.37	-57.62	-0.18	-125.14	-3.89	-1296.87	1-49	0
1	47	VP_CARRIL_1	LinMoving	Min M3	-0.37	-57.62	-0.18	-125.14	-3.72	-1239.25	1-50	0
1	48	VP_CARRIL_1	LinMoving	Min M3	-0.37	-57.62	-0.18	-125.14	-3.54	-1181.63	1-51	0
1	49	VP_CARRIL_1	LinMoving	Min M3	-0.37	-57.62	-0.18	-125.14	-3.36	-1124.00	1-52	0
1	50	VP_CARRIL_1	LinMoving	Min M3	-0.37	-57.62	-0.18	-125.14	-3.19	-1066.38	1-53	0
1	51	VP_CARRIL_1	LinMoving	Min M3	-0.37	-57.62	-0.18	-125.14	-3.01	-1008.76	1-54	0
1	52	VP_CARRIL_1	LinMoving	Min M3	-0.37	-57.62	-0.18	-125.14	-2.83	-951.14	1-55	0
1	53	VP_CARRIL_1	LinMoving	Min M3	-0.37	-57.62	-0.18	-125.14	-2.65	-893.51	1-56	0
1	54	VP_CARRIL_1	LinMoving	Min M3	-0.37	-57.62	-0.18	-125.14	-2.48	-835.89	1-57	0
1	55	VP_CARRIL_1	LinMoving	Min M3	-0.37	-57.62	-0.18	-125.14	-2.30	-778.27	1-58	0
1	56	VP_CARRIL_1	LinMoving	Min M3	-0.37	-57.62	-0.18	-125.14	-2.12	-720.65	1-59	0
1	57	VP_CARRIL_1	LinMoving	Min M3	-0.37	-57.62	-0.18	-125.14	-1.95	-663.02	1-60	0
1	58	VP_CARRIL_1	LinMoving	Min M3	-0.37	-57.62	-0.18	-125.14	-1.77	-605.40	1-61	0
1	59	VP_CARRIL_1	LinMoving	Min M3	-0.37	-57.62	-0.18	-125.14	-1.59	-547.78	1-62	0
1	60	VP_CARRIL_1	LinMoving	Min M3	-0.37	-57.62	-0.18	-125.14	-1.42	-490.15	1-63	0
1	61	VP_CARRIL_1	LinMoving	Min M3	-0.37	-57.62	-0.18	-125.14	-1.24	-432.53	1-64	0
1	62	VP_CARRIL_1	LinMoving	Min M3	-0.37	-57.62	-0.18	-125.14	-1.06	-374.91	1-65	0
1	63	VP_CARRIL_1	LinMoving	Min M3	-0.37	-57.62	-0.18	-125.14	-0.88	-317.29	1-66	0
1	64	VP_CARRIL_1	LinMoving	Min M3	-0.37	-57.62	-0.18	-125.14	-0.71	-259.66	1-67	0
1	65	VP_CARRIL_1	LinMoving	Min M3	-0.50	-57.59	-0.17	-120.19	-0.50	-202.04	1-68	0
1	66	VP_CARRIL_1	LinMoving	Min M3	-0.50	-57.59	-0.17	-120.19	-0.33	-144.46	1-69	0
1	67	VP_CARRIL_1	LinMoving	Min M3	-0.83	5.46	0.03	15.42	0.34	-142.28	1-70	0
1	67.5	VP_CARRIL_1	LinMoving	Min M3	-0.83	5.46	0.03	15.42	0.32	-144.96	1-71	0
1	68.5	VP_CARRIL_1	LinMoving	Min M3	0.00	-300.00	0.00	750.00	0.00	-149.70	1-72	0
1	0	SC_CARRIL_2	LinMoving	Max P	0.00	0.00	0.00	0.00	0.00	0.00	1-1	0
1	0.5	SC_CARRIL_2	LinMoving	Max P	0.04	5.08	-0.01	-4.96	0.00	0.04	1-2	0
1	1.5	SC_CARRIL_2	LinMoving	Max P	0.04	5.08	-0.01	-4.96	0.01	-5.04	1-3	0
1	2	SC_CARRIL_2	LinMoving	Max P	0.04	5.08	-0.01	-4.96	0.01	-7.57	1-4	0
1	3	SC_CARRIL_2	LinMoving	Max P	0.04	5.08	-0.01	-4.96	0.02	-12.65	1-5	0
1	4	SC_CARRIL_2	LinMoving	Max P	0.04	5.08	-0.01	-4.96	0.03	-17.72	1-6	0
1	5	SC_CARRIL_2	LinMoving	Max P	0.04	5.08	-0.01	-4.96	0.03	-22.80	1-7	0
1	6	SC_CARRIL_2	LinMoving	Max P	0.04	5.08	-0.01	-4.96	0.04	-27.88	1-8	0
1	7	SC_CARRIL_2	LinMoving	Max P	0.04	5.08	-0.01	-4.96	0.05	-32.95	1-9	0

ESTRUCTURA E1. ESFUERZOS EN TABLERO PARA TODOS LOS CASOS E HIPOTESIS DE CARGA

Frame	Station	OutputCase	CaseType	StepType	P	V2	V3	T	M2	M3	FrameElem	ElemStation
Text	m	Text	Text	Text	KN	KN	KN	KN-m	KN-m	KN-m	Text	m
1	8	SC_CARRIL_2	LinMoving	Max P	0.04	5.08	-0.01	-4.96	0.06	-38.03	1-10	0
1	9	SC_CARRIL_2	LinMoving	Max P	0.04	5.08	-0.01	-4.96	0.07	-43.10	1-11	0
1	10	SC_CARRIL_2	LinMoving	Max P	0.04	5.08	-0.01	-4.96	0.07	-48.18	1-12	0
1	11	SC_CARRIL_2	LinMoving	Max P	0.04	5.08	-0.01	-4.96	0.08	-53.26	1-13	0
1	12	SC_CARRIL_2	LinMoving	Max P	0.04	5.08	-0.01	-4.96	0.09	-58.33	1-14	0
1	13	SC_CARRIL_2	LinMoving	Max P	0.04	5.08	-0.01	-4.96	0.10	-63.41	1-15	0
1	14	SC_CARRIL_2	LinMoving	Max P	0.04	5.08	-0.01	-4.96	0.11	-68.48	1-16	0
1	15	SC_CARRIL_2	LinMoving	Max P	0.04	5.08	-0.01	-4.96	0.11	-73.56	1-17	0
1	16	SC_CARRIL_2	LinMoving	Max P	0.04	5.08	-0.01	-4.96	0.12	-78.64	1-18	0
1	17	SC_CARRIL_2	LinMoving	Max P	0.04	5.08	-0.01	-4.96	0.13	-83.71	1-19	0
1	18	SC_CARRIL_2	LinMoving	Max P	0.04	5.08	-0.01	-4.96	0.14	-88.79	1-20	0
1	19	SC_CARRIL_2	LinMoving	Max P	0.04	5.08	-0.01	-4.96	0.15	-93.86	1-21	0
1	20	SC_CARRIL_2	LinMoving	Max P	0.04	5.08	-0.01	-4.96	0.15	-98.94	1-22	0
1	21	SC_CARRIL_2	LinMoving	Max P	0.04	5.08	-0.01	-4.96	0.16	-104.02	1-23	0
1	22	SC_CARRIL_2	LinMoving	Max P	0.04	5.08	-0.01	-4.96	0.17	-109.09	1-24	0
1	23	SC_CARRIL_2	LinMoving	Max P	0.04	5.08	-0.01	-4.96	0.18	-114.17	1-25	0
1	24	SC_CARRIL_2	LinMoving	Max P	0.04	5.08	-0.01	-4.96	0.19	-119.24	1-26	0
1	25	SC_CARRIL_2	LinMoving	Max P	0.04	5.08	-0.01	-4.96	0.19	-124.32	1-27	0
1	26	SC_CARRIL_2	LinMoving	Max P	0.04	5.08	-0.01	-4.96	0.20	-129.40	1-28	0
1	27	SC_CARRIL_2	LinMoving	Max P	0.04	5.08	-0.01	-4.96	0.21	-134.47	1-29	0
1	28	SC_CARRIL_2	LinMoving	Max P	0.04	5.08	-0.01	-4.96	0.22	-139.55	1-30	0
1	29	SC_CARRIL_2	LinMoving	Max P	0.04	5.08	-0.01	-4.96	0.23	-144.62	1-31	0
1	30	SC_CARRIL_2	LinMoving	Max P	0.04	5.08	-0.01	-4.96	0.23	-149.70	1-32	0
1	31	SC_CARRIL_2	LinMoving	Max P	0.04	5.08	-0.01	-4.96	0.24	-154.78	1-33	0
1	32	SC_CARRIL_2	LinMoving	Max P	0.04	5.08	-0.01	-4.96	0.25	-159.85	1-34	0
1	33	SC_CARRIL_2	LinMoving	Max P	0.04	5.08	-0.01	-4.96	0.26	-164.93	1-35	0
1	33.75	SC_CARRIL_2	LinMoving	Max P	0.04	5.08	-0.01	-4.96	0.26	-168.74	1-36	0
1	34.5	SC_CARRIL_2	LinMoving	Max P	0.04	-5.22	0.01	4.89	0.27	-172.62	1-37	0
1	35.25	SC_CARRIL_2	LinMoving	Max P	0.04	-5.08	0.01	4.96	0.26	-168.74	1-38	0
1	36	SC_CARRIL_2	LinMoving	Max P	0.04	-5.08	0.01	4.96	0.26	-164.93	1-39	0
1	37	SC_CARRIL_2	LinMoving	Max P	0.04	-5.08	0.01	4.96	0.25	-159.85	1-40	0
1	38	SC_CARRIL_2	LinMoving	Max P	0.04	-5.08	0.01	4.96	0.24	-154.78	1-41	0
1	39	SC_CARRIL_2	LinMoving	Max P	0.04	-5.08	0.01	4.96	0.23	-149.70	1-42	0
1	40	SC_CARRIL_2	LinMoving	Max P	0.04	-5.08	0.01	4.96	0.23	-144.62	1-43	0
1	41	SC_CARRIL_2	LinMoving	Max P	0.04	-5.08	0.01	4.96	0.22	-139.55	1-44	0
1	42	SC_CARRIL_2	LinMoving	Max P	0.04	-5.08	0.01	4.96	0.21	-134.47	1-45	0
1	43	SC_CARRIL_2	LinMoving	Max P	0.04	-5.08	0.01	4.96	0.20	-129.40	1-46	0
1	44	SC_CARRIL_2	LinMoving	Max P	0.04	-5.08	0.01	4.96	0.19	-124.32	1-47	0
1	45	SC_CARRIL_2	LinMoving	Max P	0.04	-5.08	0.01	4.96	0.19	-119.24	1-48	0
1	46	SC_CARRIL_2	LinMoving	Max P	0.04	-5.08	0.01	4.96	0.18	-114.17	1-49	0
1	47	SC_CARRIL_2	LinMoving	Max P	0.04	-5.08	0.01	4.96	0.17	-109.09	1-50	0
1	48	SC_CARRIL_2	LinMoving	Max P	0.04	-5.08	0.01	4.96	0.16	-104.02	1-51	0
1	49	SC_CARRIL_2	LinMoving	Max P	0.04	-5.08	0.01	4.96	0.15	-98.94	1-52	0
1	50	SC_CARRIL_2	LinMoving	Max P	0.04	-5.08	0.01	4.96	0.15	-93.86	1-53	0
1	51	SC_CARRIL_2	LinMoving	Max P	0.04	-5.08	0.01	4.96	0.14	-88.79	1-54	0
1	52	SC_CARRIL_2	LinMoving	Max P	0.04	-5.08	0.01	4.96	0.13	-83.71	1-55	0
1	53	SC_CARRIL_2	LinMoving	Max P	0.04	-5.08	0.01	4.96	0.12	-78.64	1-56	0
1	54	SC_CARRIL_2	LinMoving	Max P	0.04	-5.08	0.01	4.96	0.11	-73.56	1-57	0
1	55	SC_CARRIL_2	LinMoving	Max P	0.04	-5.08	0.01	4.96	0.11	-68.48	1-58	0
1	56	SC_CARRIL_2	LinMoving	Max P	0.04	-5.08	0.01	4.96	0.10	-63.41	1-59	0
1	57	SC_CARRIL_2	LinMoving	Max P	0.04	-5.08	0.01	4.96	0.09	-58.33	1-60	0
1	58	SC_CARRIL_2	LinMoving	Max P	0.04	-5.08	0.01	4.96	0.08	-53.26	1-61	0
1	59	SC_CARRIL_2	LinMoving	Max P	0.04	-5.08	0.01	4.96	0.07	-48.18	1-62	0
1	60	SC_CARRIL_2	LinMoving	Max P	0.04	-5.08	0.01	4.96	0.07	-43.10	1-63	0
1	61	SC_CARRIL_2	LinMoving	Max P	0.04	-5.08	0.01	4.96	0.06	-38.03	1-64	0
1	62	SC_CARRIL_2	LinMoving	Max P	0.04	-5.08	0.01	4.96	0.05	-32.95	1-65	0
1	63	SC_CARRIL_2	LinMoving	Max P	0.04	-5.08	0.01	4.96	0.04	-27.88	1-66	0
1	64	SC_CARRIL_2	LinMoving	Max P	0.04	-5.08	0.01	4.96	0.03	-22.80	1-67	0
1	65	SC_CARRIL_2	LinMoving	Max P	0.04	-5.08	0.01	4.96	0.03	-17.72	1-68	0
1	66	SC_CARRIL_2	LinMoving	Max P	0.04	-5.08	0.01	4.96	0.02	-12.65	1-69	0
1	67	SC_CARRIL_2	LinMoving	Max P	0.04	-5.08	0.01	4.96	0.01	-7.57	1-70	0
1	67.5	SC_CARRIL_2	LinMoving	Max P	0.04	-5.08	0.01	4.96	0.01	-5.04	1-71	0
1	68.5	SC_CARRIL_2	LinMoving	Max P	0.00	0.00	0.00	0.00	0.00	0.00	1-72	0
1	0	SC_CARRIL_2	LinMoving	Min P	0.00	0.00	0.00	0.00	0.00	0.00	1-1	0
1	0.5	SC_CARRIL_2	LinMoving	Min P	-1.86	-100.82	-0.02	-76.00	-0.04	-3.47	1-2	0
1	1.5	SC_CARRIL_2	LinMoving	Min P	-1.86	-93.32	-0.02	-72.25	-0.02	93.48	1-3	0
1	2	SC_CARRIL_2	LinMoving	Min P	-1.86	-93.32	-0.02	-72.25	-0.01	140.07	1-4	0
1	3	SC_CARRIL_2	LinMoving	Min P	-1.86	-85.82	-0.02	-68.50	0.01	225.89	1-5	0
1	4	SC_CARRIL_2	LinMoving	Min P	-1.86	-78.32	-0.02	-64.75	0.02	304.22	1-6	0
1	5	SC_CARRIL_2	LinMoving	Min P	-1.86	-70.82	-0.02	-61.00	0.04	375.05	1-7	0
1	6	SC_CARRIL_2	LinMoving	Min P	-1.86	-63.32	-0.02	-57.25	0.05	438.37	1-8	0
1	7	SC_CARRIL_2	LinMoving	Min P	-1.86	-55.82	-0.02	-53.50	0.07	494.20	1-9	0
1	8	SC_CARRIL_2	LinMoving	Min P	-1.86	-48.32	-0.02	-49.75	0.09	542.53	1-10	0
1	9	SC_CARRIL_2	LinMoving	Min P	-1.86	-40.82	-0.02	-46.00	0.10	583.35	1-11	0
1	10	SC_CARRIL_2	LinMoving	Min P	-1.86	-33.32	-0.02	-42.25	0.12	616.68	1-12	0
1	11	SC_CARRIL_2	LinMoving	Min P	-1.86	-25.82	-0.02	-38.50	0.13	642.51	1-13	0
1	12	SC_CARRIL_2	LinMoving	Min P	-1.86	-18.32	-0.02	-34.75	0.15	660.84	1-14	0
1	13	SC_CARRIL_2	LinMoving	Min P	-1.86	-10.82	-0.02	-31.00	0.17	671.66	1-15	0
1	14	SC_CARRIL_2	LinMoving	Min P	-1.86	-3.32	-0.02	-27.25	0.18	674.99	1-16	0
1	15	SC_CARRIL_2	LinMoving	Min P	-1.86	4.18	-0.02	-23.50	0.20	670.82	1-17	0
1	16	SC_CARRIL_2	LinMoving	Min P	-1.86	11.68	-0.02	-19.75	0.21	659.14	1-18	0

ESTRUCTURA E1. ESFUERZOS EN TABLERO PARA TODOS LOS CASOS E HIPOTESIS DE CARGA

Frame	Station	OutputCase	CaseType	StepType	P	V2	V3	T	M2	M3	FrameElem	ElemStation
Text	m	Text	Text	Text	KN	KN	KN	KN-m	KN-m	KN-m	Text	m
1	17	SC_CARRIL_2	LinMoving	Min P	-1.86	19.18	-0.02	-16.00	0.23	639.97	1-19	0
1	18	SC_CARRIL_2	LinMoving	Min P	-1.86	26.68	-0.02	-12.25	0.25	613.30	1-20	0
1	19	SC_CARRIL_2	LinMoving	Min P	-1.86	34.18	-0.02	-8.50	0.26	579.12	1-21	0
1	20	SC_CARRIL_2	LinMoving	Min P	-1.86	41.68	-0.02	-4.75	0.28	537.45	1-22	0
1	21	SC_CARRIL_2	LinMoving	Min P	-1.86	49.18	-0.02	-1.00	0.30	488.28	1-23	0
1	22	SC_CARRIL_2	LinMoving	Min P	-1.86	56.68	-0.02	2.75	0.31	431.60	1-24	0
1	23	SC_CARRIL_2	LinMoving	Min P	-1.86	64.18	-0.02	6.50	0.33	367.43	1-25	0
1	24	SC_CARRIL_2	LinMoving	Min P	-1.86	71.68	-0.02	10.25	0.34	295.76	1-26	0
1	25	SC_CARRIL_2	LinMoving	Min P	-1.86	79.18	-0.02	14.00	0.36	216.59	1-27	0
1	26	SC_CARRIL_2	LinMoving	Min P	-1.86	86.68	-0.02	17.75	0.38	129.91	1-28	0
1	27	SC_CARRIL_2	LinMoving	Min P	-1.86	94.18	-0.02	21.50	0.39	35.74	1-29	0
1	28	SC_CARRIL_2	LinMoving	Min P	-1.86	101.68	-0.02	25.25	0.41	-65.93	1-30	0
1	29	SC_CARRIL_2	LinMoving	Min P	-1.86	109.18	-0.02	29.00	0.42	-175.11	1-31	0
1	30	SC_CARRIL_2	LinMoving	Min P	-1.86	116.67	-0.02	32.75	0.44	-291.78	1-32	0
1	31	SC_CARRIL_2	LinMoving	Min P	-1.86	124.17	-0.02	36.50	0.46	-415.95	1-33	0
1	32	SC_CARRIL_2	LinMoving	Min P	-1.86	135.42	-0.02	42.12	0.47	-547.63	1-34	0
1	33	SC_CARRIL_2	LinMoving	Min P	-1.86	142.92	-0.02	45.87	0.49	-686.73	1-35	0
1	33.75	SC_CARRIL_2	LinMoving	Min P	-1.86	146.67	-0.02	47.75	0.50	-796.73	1-36	0
1	34.5	SC_CARRIL_2	LinMoving	Min P	-1.86	-154.03	0.02	-51.42	0.51	-910.42	1-37	0
1	35.25	SC_CARRIL_2	LinMoving	Min P	-1.86	-146.67	0.02	-47.75	0.50	-796.73	1-38	0
1	36	SC_CARRIL_2	LinMoving	Min P	-1.86	-142.92	0.02	-45.87	0.49	-686.80	1-39	0
1	37	SC_CARRIL_2	LinMoving	Min P	-1.86	-131.67	0.02	-40.25	0.47	-547.63	1-40	0
1	38	SC_CARRIL_2	LinMoving	Min P	-1.86	-124.17	0.02	-36.50	0.46	-415.95	1-41	0
1	39	SC_CARRIL_2	LinMoving	Min P	-1.86	-116.67	0.02	-32.75	0.44	-291.78	1-42	0
1	40	SC_CARRIL_2	LinMoving	Min P	-1.86	-109.18	0.02	-29.00	0.42	-175.11	1-43	0
1	41	SC_CARRIL_2	LinMoving	Min P	-1.86	-101.68	0.02	-25.25	0.41	-65.93	1-44	0
1	42	SC_CARRIL_2	LinMoving	Min P	-1.86	-94.18	0.02	-21.50	0.39	35.74	1-45	0
1	43	SC_CARRIL_2	LinMoving	Min P	-1.86	-86.68	0.02	-17.75	0.38	129.91	1-46	0
1	44	SC_CARRIL_2	LinMoving	Min P	-1.86	-79.18	0.02	-14.00	0.36	216.59	1-47	0
1	45	SC_CARRIL_2	LinMoving	Min P	-1.86	-71.68	0.02	-10.25	0.34	295.76	1-48	0
1	46	SC_CARRIL_2	LinMoving	Min P	-1.86	-64.18	0.02	-6.50	0.33	367.43	1-49	0
1	47	SC_CARRIL_2	LinMoving	Min P	-1.86	-56.68	0.02	-2.75	0.31	431.60	1-50	0
1	48	SC_CARRIL_2	LinMoving	Min P	-1.86	-49.18	0.02	1.00	0.30	488.28	1-51	0
1	49	SC_CARRIL_2	LinMoving	Min P	-1.86	-41.68	0.02	4.75	0.28	537.45	1-52	0
1	50	SC_CARRIL_2	LinMoving	Min P	-1.86	-34.18	0.02	8.50	0.26	579.12	1-53	0
1	51	SC_CARRIL_2	LinMoving	Min P	-1.86	-26.68	0.02	12.25	0.25	613.30	1-54	0
1	52	SC_CARRIL_2	LinMoving	Min P	-1.86	-19.18	0.02	16.00	0.23	639.97	1-55	0
1	53	SC_CARRIL_2	LinMoving	Min P	-1.86	-11.68	0.02	19.75	0.21	659.14	1-56	0
1	54	SC_CARRIL_2	LinMoving	Min P	-1.86	-4.18	0.02	23.50	0.20	670.82	1-57	0
1	55	SC_CARRIL_2	LinMoving	Min P	-1.86	3.32	0.02	27.25	0.18	674.99	1-58	0
1	56	SC_CARRIL_2	LinMoving	Min P	-1.86	10.82	0.02	31.00	0.17	671.66	1-59	0
1	57	SC_CARRIL_2	LinMoving	Min P	-1.86	18.32	0.02	34.75	0.15	660.84	1-60	0
1	58	SC_CARRIL_2	LinMoving	Min P	-1.86	25.82	0.02	38.50	0.13	642.51	1-61	0
1	59	SC_CARRIL_2	LinMoving	Min P	-1.86	33.32	0.02	42.25	0.12	616.68	1-62	0
1	60	SC_CARRIL_2	LinMoving	Min P	-1.86	40.82	0.02	46.00	0.10	583.36	1-63	0
1	61	SC_CARRIL_2	LinMoving	Min P	-1.86	48.32	0.02	49.75	0.09	542.53	1-64	0
1	62	SC_CARRIL_2	LinMoving	Min P	-1.86	55.82	0.02	53.50	0.07	494.20	1-65	0
1	63	SC_CARRIL_2	LinMoving	Min P	-1.86	63.32	0.02	57.25	0.05	438.37	1-66	0
1	64	SC_CARRIL_2	LinMoving	Min P	-1.86	70.82	0.02	61.00	0.04	375.05	1-67	0
1	65	SC_CARRIL_2	LinMoving	Min P	-1.86	78.32	0.02	64.75	0.02	304.22	1-68	0
1	66	SC_CARRIL_2	LinMoving	Min P	-1.86	85.82	0.02	68.50	0.01	225.89	1-69	0
1	67	SC_CARRIL_2	LinMoving	Min P	-1.86	93.32	0.02	72.25	-0.01	140.14	1-70	0
1	67.5	SC_CARRIL_2	LinMoving	Min P	-1.86	93.32	0.02	72.25	-0.02	93.61	1-71	0
1	68.5	SC_CARRIL_2	LinMoving	Min P	0.00	0.00	0.00	0.00	0.00	0.00	1-72	0
1	0	SC_CARRIL_2	LinMoving	Max V2	0.00	0.00	0.00	0.00	0.00	0.00	1-1	0
1	0.5	SC_CARRIL_2	LinMoving	Max V2	-0.34	15.90	-0.01	-9.09	-0.01	-0.29	1-2	0
1	1.5	SC_CARRIL_2	LinMoving	Max V2	-0.35	15.93	-0.01	-9.03	0.00	-15.25	1-3	0
1	2	SC_CARRIL_2	LinMoving	Max V2	-0.35	15.93	-0.01	-9.03	0.01	-23.23	1-4	0
1	3	SC_CARRIL_2	LinMoving	Max V2	-0.39	16.22	-0.01	-8.89	0.02	-31.85	1-5	0
1	4	SC_CARRIL_2	LinMoving	Max V2	-0.43	16.79	-0.01	-8.67	0.03	-34.03	1-6	0
1	5	SC_CARRIL_2	LinMoving	Max V2	-0.47	17.65	-0.01	-8.35	0.04	-30.55	1-7	0
1	6	SC_CARRIL_2	LinMoving	Max V2	-0.53	18.79	-0.01	-7.93	0.05	-22.51	1-8	0
1	7	SC_CARRIL_2	LinMoving	Max V2	-0.58	20.22	-0.01	-7.42	0.06	-10.78	1-9	0
1	8	SC_CARRIL_2	LinMoving	Max V2	-0.64	21.92	-0.01	-6.81	0.07	3.97	1-10	0
1	9	SC_CARRIL_2	LinMoving	Max V2	-0.71	23.91	-0.01	-6.10	0.08	20.77	1-11	0
1	10	SC_CARRIL_2	LinMoving	Max V2	-0.77	26.17	-0.01	-5.30	0.09	38.78	1-12	0
1	11	SC_CARRIL_2	LinMoving	Max V2	-0.84	28.70	-0.01	-4.40	0.10	57.16	1-13	0
1	12	SC_CARRIL_2	LinMoving	Max V2	-0.90	31.51	-0.01	-3.41	0.11	75.08	1-14	0
1	13	SC_CARRIL_2	LinMoving	Max V2	-0.97	34.59	-0.01	-2.31	0.13	91.73	1-15	0
1	14	SC_CARRIL_2	LinMoving	Max V2	-1.04	37.93	-0.01	-1.12	0.14	106.34	1-16	0
1	15	SC_CARRIL_2	LinMoving	Max V2	-1.11	41.53	-0.01	0.16	0.16	118.14	1-17	0
1	16	SC_CARRIL_2	LinMoving	Max V2	-1.17	45.38	-0.01	1.54	0.17	126.37	1-18	0
1	17	SC_CARRIL_2	LinMoving	Max V2	-1.23	49.49	-0.01	3.02	0.19	130.33	1-19	0
1	18	SC_CARRIL_2	LinMoving	Max V2	-1.29	53.84	-0.01	4.60	0.21	129.31	1-20	0
1	19	SC_CARRIL_2	LinMoving	Max V2	-1.35	58.44	-0.01	6.27	0.23	122.66	1-21	0
1	20	SC_CARRIL_2	LinMoving	Max V2	-1.41	63.27	-0.01	8.05	0.25	109.73	1-22	0
1	21	SC_CARRIL_2	LinMoving	Max V2	-1.46	68.33	-0.02	9.91	0.27	89.91	1-23	0
1	22	SC_CARRIL_2	LinMoving	Max V2	-1.51	73.62	-0.02	11.88	0.30	62.64	1-24	0
1	23	SC_CARRIL_2	LinMoving	Max V2	-1.55	79.12	-0.02	13.94	0.32	27.37	1-25	0
1	24	SC_CARRIL_2	LinMoving	Max V2	-1.59	84.83	-0.02	16.10	0.35	-16.40	1-26	0
1	25	SC_CARRIL_2	LinMoving	Max V2	-1.63	90.74	-0.02	18.36	0.38	-69.15	1-27	0

ESTRUCTURA E1. ESFUERZOS EN TABLERO PARA TODOS LOS CASOS E HIPOTESIS DE CARGA

Frame	Station	OutputCase	CaseType	StepType	P	V2	V3	T	M2	M3	FrameElem	ElemStation
Text	m	Text	Text	Text	KN	KN	KN	KN-m	KN-m	KN-m	Text	m
1	26	SC_CARRIL_2	LinMoving	Max V2	-1.67	96.86	-0.02	20.72	0.42	-131.29	1-28	0
1	27	SC_CARRIL_2	LinMoving	Max V2	-1.69	103.15	-0.02	23.17	0.45	-203.22	1-29	0
1	28	SC_CARRIL_2	LinMoving	Max V2	-1.72	109.63	-0.02	25.72	0.49	-285.28	1-30	0
1	29	SC_CARRIL_2	LinMoving	Max V2	-1.74	116.29	-0.02	28.37	0.53	-377.79	1-31	0
1	30	SC_CARRIL_2	LinMoving	Max V2	-1.76	123.10	-0.02	31.12	0.57	-480.99	1-32	0
1	31	SC_CARRIL_2	LinMoving	Max V2	-1.77	130.07	-0.02	33.96	0.61	-595.12	1-33	0
1	32	SC_CARRIL_2	LinMoving	Max V2	-1.78	140.93	-0.02	38.75	0.66	-719.93	1-34	0
1	33	SC_CARRIL_2	LinMoving	Max V2	-1.79	148.18	-0.02	41.80	0.71	-856.55	1-35	0
1	33.75	SC_CARRIL_2	LinMoving	Max V2	-1.79	151.81	-0.02	43.07	0.75	-966.46	1-36	0
1	34.5	SC_CARRIL_2	LinMoving	Max V2	-0.02	0.04	0.00	-0.03	-0.01	0.42	1-37	0
1	35.25	SC_CARRIL_2	LinMoving	Max V2	-0.02	0.06	0.00	0.28	0.01	0.99	1-38	0
1	36	SC_CARRIL_2	LinMoving	Max V2	-0.02	0.18	0.00	0.89	0.04	4.89	1-39	0
1	37	SC_CARRIL_2	LinMoving	Max V2	-0.03	0.43	0.00	1.62	0.06	12.46	1-40	0
1	38	SC_CARRIL_2	LinMoving	Max V2	-0.04	0.82	0.00	2.43	0.09	24.39	1-41	0
1	39	SC_CARRIL_2	LinMoving	Max V2	-0.05	1.35	0.00	3.33	0.11	39.51	1-42	0
1	40	SC_CARRIL_2	LinMoving	Max V2	-0.07	2.04	0.00	4.34	0.12	58.05	1-43	0
1	41	SC_CARRIL_2	LinMoving	Max V2	-0.09	2.88	0.01	5.44	0.14	79.80	1-44	0
1	42	SC_CARRIL_2	LinMoving	Max V2	-0.12	3.90	0.01	6.64	0.15	104.48	1-45	0
1	43	SC_CARRIL_2	LinMoving	Max V2	-0.15	5.10	0.01	7.93	0.16	131.80	1-46	0
1	44	SC_CARRIL_2	LinMoving	Max V2	-0.18	6.49	0.01	9.33	0.17	161.41	1-47	0
1	45	SC_CARRIL_2	LinMoving	Max V2	-0.22	8.08	0.01	10.82	0.18	192.92	1-48	0
1	46	SC_CARRIL_2	LinMoving	Max V2	-0.26	9.86	0.01	12.41	0.18	225.89	1-49	0
1	47	SC_CARRIL_2	LinMoving	Max V2	-0.30	11.86	0.01	14.10	0.18	259.87	1-50	0
1	48	SC_CARRIL_2	LinMoving	Max V2	-0.35	14.08	0.01	15.88	0.18	294.35	1-51	0
1	49	SC_CARRIL_2	LinMoving	Max V2	-0.41	16.52	0.01	17.76	0.18	328.78	1-52	0
1	50	SC_CARRIL_2	LinMoving	Max V2	-0.46	19.19	0.01	19.74	0.18	362.60	1-53	0
1	51	SC_CARRIL_2	LinMoving	Max V2	-0.52	22.09	0.01	21.82	0.18	395.19	1-54	0
1	52	SC_CARRIL_2	LinMoving	Max V2	-0.58	25.24	0.01	23.99	0.17	425.93	1-55	0
1	53	SC_CARRIL_2	LinMoving	Max V2	-0.64	28.63	0.01	26.26	0.16	454.13	1-56	0
1	54	SC_CARRIL_2	LinMoving	Max V2	-0.71	32.27	0.01	28.63	0.16	479.12	1-57	0
1	55	SC_CARRIL_2	LinMoving	Max V2	-0.77	36.17	0.01	31.09	0.15	500.16	1-58	0
1	56	SC_CARRIL_2	LinMoving	Max V2	-0.84	40.33	0.01	33.65	0.14	516.52	1-59	0
1	57	SC_CARRIL_2	LinMoving	Max V2	-0.91	44.76	0.01	36.31	0.13	527.43	1-60	0
1	58	SC_CARRIL_2	LinMoving	Max V2	-0.98	49.45	0.01	39.06	0.11	532.10	1-61	0
1	59	SC_CARRIL_2	LinMoving	Max V2	-1.04	54.41	0.01	41.91	0.10	529.72	1-62	0
1	60	SC_CARRIL_2	LinMoving	Max V2	-1.11	59.65	0.01	44.86	0.09	519.48	1-63	0
1	61	SC_CARRIL_2	LinMoving	Max V2	-1.17	65.17	0.01	47.90	0.07	500.53	1-64	0
1	62	SC_CARRIL_2	LinMoving	Max V2	-1.23	70.96	0.01	51.05	0.06	472.03	1-65	0
1	63	SC_CARRIL_2	LinMoving	Max V2	-1.29	77.04	0.01	54.28	0.05	433.11	1-66	0
1	64	SC_CARRIL_2	LinMoving	Max V2	-1.34	83.39	0.01	57.62	0.03	382.90	1-67	0
1	65	SC_CARRIL_2	LinMoving	Max V2	-1.39	90.04	0.01	61.04	0.02	320.52	1-68	0
1	66	SC_CARRIL_2	LinMoving	Max V2	-1.43	96.96	0.01	64.57	0.00	245.09	1-69	0
1	67	SC_CARRIL_2	LinMoving	Max V2	-1.46	104.18	0.01	68.18	-0.01	155.78	1-70	0
1	67.5	SC_CARRIL_2	LinMoving	Max V2	-1.46	104.18	0.01	68.18	-0.02	103.79	1-71	0
1	68.5	SC_CARRIL_2	LinMoving	Max V2	0.00	0.00	0.00	0.00	0.00	0.00	1-72	0
1	0	SC_CARRIL_2	LinMoving	Min V2	0.00	0.00	0.00	0.00	0.00	0.00	1-1	0
1	0.5	SC_CARRIL_2	LinMoving	Min V2	-1.47	-111.64	-0.01	-71.88	-0.03	-3.14	1-2	0
1	1.5	SC_CARRIL_2	LinMoving	Min V2	-1.46	-104.18	-0.01	-68.18	-0.02	103.69	1-3	0
1	2	SC_CARRIL_2	LinMoving	Min V2	-1.46	-104.18	-0.01	-68.18	-0.01	155.72	1-4	0
1	3	SC_CARRIL_2	LinMoving	Min V2	-1.43	-96.96	-0.01	-64.57	0.00	245.09	1-5	0
1	4	SC_CARRIL_2	LinMoving	Min V2	-1.39	-90.04	-0.01	-61.04	0.02	320.52	1-6	0
1	5	SC_CARRIL_2	LinMoving	Min V2	-1.34	-83.39	-0.01	-57.61	0.03	382.90	1-7	0
1	6	SC_CARRIL_2	LinMoving	Min V2	-1.29	-77.04	-0.01	-54.28	0.05	433.11	1-8	0
1	7	SC_CARRIL_2	LinMoving	Min V2	-1.23	-70.96	-0.01	-51.05	0.06	472.03	1-9	0
1	8	SC_CARRIL_2	LinMoving	Min V2	-1.17	-65.17	-0.01	-47.90	0.07	500.53	1-10	0
1	9	SC_CARRIL_2	LinMoving	Min V2	-1.11	-59.65	-0.01	-44.86	0.09	519.48	1-11	0
1	10	SC_CARRIL_2	LinMoving	Min V2	-1.04	-54.41	-0.01	-41.91	0.10	529.72	1-12	0
1	11	SC_CARRIL_2	LinMoving	Min V2	-0.98	-49.45	-0.01	-39.06	0.11	532.10	1-13	0
1	12	SC_CARRIL_2	LinMoving	Min V2	-0.91	-44.76	-0.01	-36.31	0.13	527.43	1-14	0
1	13	SC_CARRIL_2	LinMoving	Min V2	-0.84	-40.33	-0.01	-33.65	0.14	516.52	1-15	0
1	14	SC_CARRIL_2	LinMoving	Min V2	-0.77	-36.17	-0.01	-31.09	0.15	500.16	1-16	0
1	15	SC_CARRIL_2	LinMoving	Min V2	-0.71	-32.27	-0.01	-28.63	0.16	479.12	1-17	0
1	16	SC_CARRIL_2	LinMoving	Min V2	-0.64	-28.63	-0.01	-26.26	0.16	454.13	1-18	0
1	17	SC_CARRIL_2	LinMoving	Min V2	-0.58	-25.24	-0.01	-23.99	0.17	425.93	1-19	0
1	18	SC_CARRIL_2	LinMoving	Min V2	-0.52	-22.09	-0.01	-21.82	0.18	395.19	1-20	0
1	19	SC_CARRIL_2	LinMoving	Min V2	-0.46	-19.19	-0.01	-19.74	0.18	362.60	1-21	0
1	20	SC_CARRIL_2	LinMoving	Min V2	-0.41	-16.52	-0.01	-17.76	0.18	328.78	1-22	0
1	21	SC_CARRIL_2	LinMoving	Min V2	-0.35	-14.08	-0.01	-15.88	0.18	294.35	1-23	0
1	22	SC_CARRIL_2	LinMoving	Min V2	-0.30	-11.86	-0.01	-14.10	0.18	259.87	1-24	0
1	23	SC_CARRIL_2	LinMoving	Min V2	-0.26	-9.86	-0.01	-12.41	0.18	225.89	1-25	0
1	24	SC_CARRIL_2	LinMoving	Min V2	-0.22	-8.08	-0.01	-10.82	0.18	192.92	1-26	0
1	25	SC_CARRIL_2	LinMoving	Min V2	-0.18	-6.49	-0.01	-9.33	0.17	161.41	1-27	0
1	26	SC_CARRIL_2	LinMoving	Min V2	-0.15	-5.10	-0.01	-7.93	0.16	131.80	1-28	0
1	27	SC_CARRIL_2	LinMoving	Min V2	-0.12	-3.90	-0.01	-6.64	0.15	104.48	1-29	0
1	28	SC_CARRIL_2	LinMoving	Min V2	-0.09	-2.88	-0.01	-5.44	0.14	79.80	1-30	0
1	29	SC_CARRIL_2	LinMoving	Min V2	-0.07	-2.03	0.00	-4.34	0.12	58.05	1-31	0
1	30	SC_CARRIL_2	LinMoving	Min V2	-0.05	-1.35	0.00	-3.33	0.11	39.51	1-32	0
1	31	SC_CARRIL_2	LinMoving	Min V2	-0.04	-0.82	0.00	-2.43	0.09	24.39	1-33	0
1	32	SC_CARRIL_2	LinMoving	Min V2	-0.03	-0.43	0.00	-1.59	0.06	12.45	1-34	0
1	33	SC_CARRIL_2	LinMoving	Min V2	-0.02	-0.18	0.00	-0.89	0.04	4.89	1-35	0
1	33.75	SC_CARRIL_2	LinMoving	Min V2	-0.02	-0.06	0.00	-0.28	0.01	0.99	1-36	0

ESTRUCTURA E1. ESFUERZOS EN TABLERO PARA TODOS LOS CASOS E HIPOTESIS DE CARGA

Frame	Station	OutputCase	CaseType	StepType	P	V2	V3	T	M2	M3	FrameElem	ElemStation
Text	m	Text	Text	Text	KN	KN	KN	KN-m	KN-m	KN-m	Text	m
1	34.5	SC_CARRIL_2	LinMoving	Min V2	-1.79	-159.29	0.02	-46.50	0.79	-1083.45	1-37	0
1	35.25	SC_CARRIL_2	LinMoving	Min V2	-1.79	-151.81	0.02	-43.07	0.75	-966.46	1-38	0
1	36	SC_CARRIL_2	LinMoving	Min V2	-1.79	-148.18	0.02	-41.80	0.71	-856.62	1-39	0
1	37	SC_CARRIL_2	LinMoving	Min V2	-1.78	-137.18	0.02	-36.90	0.66	-720.34	1-40	0
1	38	SC_CARRIL_2	LinMoving	Min V2	-1.77	-130.07	0.02	-33.96	0.61	-595.12	1-41	0
1	39	SC_CARRIL_2	LinMoving	Min V2	-1.76	-123.10	0.02	-31.12	0.57	-480.99	1-42	0
1	40	SC_CARRIL_2	LinMoving	Min V2	-1.74	-116.29	0.02	-28.37	0.53	-377.79	1-43	0
1	41	SC_CARRIL_2	LinMoving	Min V2	-1.72	-109.63	0.02	-25.72	0.49	-285.28	1-44	0
1	42	SC_CARRIL_2	LinMoving	Min V2	-1.69	-103.15	0.02	-23.17	0.45	-203.22	1-45	0
1	43	SC_CARRIL_2	LinMoving	Min V2	-1.67	-96.86	0.02	-20.72	0.42	-131.29	1-46	0
1	44	SC_CARRIL_2	LinMoving	Min V2	-1.63	-90.74	0.02	-18.36	0.38	-69.15	1-47	0
1	45	SC_CARRIL_2	LinMoving	Min V2	-1.59	-84.83	0.02	-16.10	0.35	-16.40	1-48	0
1	46	SC_CARRIL_2	LinMoving	Min V2	-1.55	-79.12	0.02	-13.94	0.32	27.37	1-49	0
1	47	SC_CARRIL_2	LinMoving	Min V2	-1.51	-73.62	0.02	-11.88	0.30	62.64	1-50	0
1	48	SC_CARRIL_2	LinMoving	Min V2	-1.46	-68.33	0.02	-9.91	0.27	89.91	1-51	0
1	49	SC_CARRIL_2	LinMoving	Min V2	-1.41	-63.27	0.01	-8.05	0.25	109.73	1-52	0
1	50	SC_CARRIL_2	LinMoving	Min V2	-1.35	-58.44	0.01	-6.27	0.23	122.66	1-53	0
1	51	SC_CARRIL_2	LinMoving	Min V2	-1.29	-53.84	0.01	-4.60	0.21	129.31	1-54	0
1	52	SC_CARRIL_2	LinMoving	Min V2	-1.23	-49.49	0.01	-3.02	0.19	130.33	1-55	0
1	53	SC_CARRIL_2	LinMoving	Min V2	-1.17	-45.38	0.01	-1.54	0.17	126.37	1-56	0
1	54	SC_CARRIL_2	LinMoving	Min V2	-1.11	-41.53	0.01	-0.16	0.16	118.14	1-57	0
1	55	SC_CARRIL_2	LinMoving	Min V2	-1.04	-37.93	0.01	1.12	0.14	106.34	1-58	0
1	56	SC_CARRIL_2	LinMoving	Min V2	-0.97	-34.59	0.01	2.31	0.13	91.73	1-59	0
1	57	SC_CARRIL_2	LinMoving	Min V2	-0.90	-31.51	0.01	3.41	0.11	75.08	1-60	0
1	58	SC_CARRIL_2	LinMoving	Min V2	-0.84	-28.70	0.01	4.40	0.10	57.16	1-61	0
1	59	SC_CARRIL_2	LinMoving	Min V2	-0.77	-26.17	0.01	5.30	0.09	38.78	1-62	0
1	60	SC_CARRIL_2	LinMoving	Min V2	-0.71	-23.91	0.01	6.10	0.08	20.77	1-63	0
1	61	SC_CARRIL_2	LinMoving	Min V2	-0.64	-21.92	0.01	6.81	0.07	3.97	1-64	0
1	62	SC_CARRIL_2	LinMoving	Min V2	-0.58	-20.22	0.01	7.42	0.06	-10.78	1-65	0
1	63	SC_CARRIL_2	LinMoving	Min V2	-0.53	-18.79	0.01	7.93	0.05	-22.51	1-66	0
1	64	SC_CARRIL_2	LinMoving	Min V2	-0.47	-17.65	0.01	8.35	0.04	-30.55	1-67	0
1	65	SC_CARRIL_2	LinMoving	Min V2	-0.43	-16.79	0.01	8.67	0.03	-34.03	1-68	0
1	66	SC_CARRIL_2	LinMoving	Min V2	-0.39	-16.22	0.01	8.89	0.02	-31.85	1-69	0
1	67	SC_CARRIL_2	LinMoving	Min V2	-0.35	-15.93	0.01	9.03	0.01	-23.21	1-70	0
1	67.5	SC_CARRIL_2	LinMoving	Min V2	-0.35	-15.93	0.01	9.04	0.00	-15.22	1-71	0
1	68.5	SC_CARRIL_2	LinMoving	Min V2	0.00	-3.75	0.00	-1.87	0.00	-1.87	1-72	0
1	0	SC_CARRIL_2	LinMoving	Max V3	0.00	0.00	0.00	0.00	0.00	0.00	1-1	0
1	0.5	SC_CARRIL_2	LinMoving	Max V3	-0.39	-35.20	0.00	-18.87	-0.01	-2.20	1-2	0
1	1.5	SC_CARRIL_2	LinMoving	Max V3	-0.39	-27.70	0.00	-15.12	-0.01	29.23	1-3	0
1	2	SC_CARRIL_2	LinMoving	Max V3	-0.39	-27.70	0.00	-15.12	-0.01	43.06	1-4	0
1	3	SC_CARRIL_2	LinMoving	Max V3	-0.39	-20.20	0.00	-11.37	-0.01	63.27	1-5	0
1	4	SC_CARRIL_2	LinMoving	Max V3	-0.39	-12.70	0.00	-7.62	-0.01	75.98	1-6	0
1	5	SC_CARRIL_2	LinMoving	Max V3	-0.39	-5.20	0.00	-3.87	-0.02	81.18	1-7	0
1	6	SC_CARRIL_2	LinMoving	Max V3	-0.39	2.23	0.00	-0.16	-0.02	78.96	1-8	0
1	7	SC_CARRIL_2	LinMoving	Max V3	-0.39	5.02	0.00	1.24	-0.02	73.95	1-9	0
1	8	SC_CARRIL_2	LinMoving	Max V3	-0.39	5.02	0.00	1.24	-0.02	68.93	1-10	0
1	9	SC_CARRIL_2	LinMoving	Max V3	-0.39	5.02	0.00	1.24	-0.02	63.91	1-11	0
1	10	SC_CARRIL_2	LinMoving	Max V3	-0.39	5.02	0.00	1.24	-0.02	58.89	1-12	0
1	11	SC_CARRIL_2	LinMoving	Max V3	-0.39	5.02	0.00	1.24	-0.02	53.87	1-13	0
1	12	SC_CARRIL_2	LinMoving	Max V3	-0.39	5.02	0.00	1.24	-0.02	48.86	1-14	0
1	13	SC_CARRIL_2	LinMoving	Max V3	-0.39	5.02	0.00	1.24	-0.03	43.84	1-15	0
1	14	SC_CARRIL_2	LinMoving	Max V3	-0.39	5.02	0.00	1.24	-0.03	38.82	1-16	0
1	15	SC_CARRIL_2	LinMoving	Max V3	-0.39	5.02	0.00	1.24	-0.03	33.80	1-17	0
1	16	SC_CARRIL_2	LinMoving	Max V3	-0.39	5.02	0.00	1.24	-0.03	28.78	1-18	0
1	17	SC_CARRIL_2	LinMoving	Max V3	-0.39	5.02	0.00	1.24	-0.03	23.77	1-19	0
1	18	SC_CARRIL_2	LinMoving	Max V3	-0.39	5.02	0.00	1.24	-0.03	18.75	1-20	0
1	19	SC_CARRIL_2	LinMoving	Max V3	-0.39	5.02	0.00	1.24	-0.03	13.73	1-21	0
1	20	SC_CARRIL_2	LinMoving	Max V3	-0.39	5.02	0.00	1.24	-0.03	8.71	1-22	0
1	21	SC_CARRIL_2	LinMoving	Max V3	-0.39	5.02	0.00	1.24	-0.04	3.69	1-23	0
1	22	SC_CARRIL_2	LinMoving	Max V3	-0.39	5.02	0.00	1.24	-0.04	-1.33	1-24	0
1	23	SC_CARRIL_2	LinMoving	Max V3	-0.39	5.02	0.00	1.24	-0.04	-6.34	1-25	0
1	24	SC_CARRIL_2	LinMoving	Max V3	-0.39	5.02	0.00	1.24	-0.04	-11.36	1-26	0
1	25	SC_CARRIL_2	LinMoving	Max V3	-0.39	5.02	0.00	1.24	-0.04	-16.38	1-27	0
1	26	SC_CARRIL_2	LinMoving	Max V3	-0.39	5.02	0.00	1.24	-0.04	-21.40	1-28	0
1	27	SC_CARRIL_2	LinMoving	Max V3	-0.39	5.02	0.00	1.24	-0.04	-26.42	1-29	0
1	28	SC_CARRIL_2	LinMoving	Max V3	-0.39	5.02	0.00	1.24	-0.04	-31.43	1-30	0
1	29	SC_CARRIL_2	LinMoving	Max V3	-0.39	5.02	0.00	1.24	-0.05	-36.45	1-31	0
1	30	SC_CARRIL_2	LinMoving	Max V3	-0.39	5.02	0.00	1.24	-0.05	-41.47	1-32	0
1	31	SC_CARRIL_2	LinMoving	Max V3	-0.39	5.02	0.00	1.24	-0.05	-46.49	1-33	0
1	32	SC_CARRIL_2	LinMoving	Max V3	-0.39	5.02	0.00	1.24	-0.05	-51.51	1-34	0
1	33	SC_CARRIL_2	LinMoving	Max V3	-0.39	5.02	0.00	1.24	-0.05	-56.51	1-35	0
1	33.75	SC_CARRIL_2	LinMoving	Max V3	-0.39	5.02	0.00	1.24	-0.05	-60.27	1-36	0
1	34.5	SC_CARRIL_2	LinMoving	Max V3	-1.43	-154.20	0.03	-45.28	0.83	-1018.99	1-37	0
1	35.25	SC_CARRIL_2	LinMoving	Max V3	-1.43	-146.71	0.03	-41.53	0.82	-905.21	1-38	0
1	36	SC_CARRIL_2	LinMoving	Max V3	-1.43	-142.96	0.03	-39.66	0.80	-795.24	1-39	0
1	37	SC_CARRIL_2	LinMoving	Max V3	-1.43	-131.71	0.03	-34.03	0.77	-656.03	1-40	0
1	38	SC_CARRIL_2	LinMoving	Max V3	-1.43	-124.21	0.03	-30.28	0.75	-524.33	1-41	0
1	39	SC_CARRIL_2	LinMoving	Max V3	-1.43	-116.71	0.03	-26.53	0.72	-400.12	1-42	0
1	40	SC_CARRIL_2	LinMoving	Max V3	-1.43	-109.21	0.03	-22.78	0.69	-283.42	1-43	0
1	41	SC_CARRIL_2	LinMoving	Max V3	-1.43	-101.71	0.03	-19.03	0.67	-174.22	1-44	0
1	42	SC_CARRIL_2	LinMoving	Max V3	-1.43	-94.21	0.03	-15.28	0.64	-72.51	1-45	0

ESTRUCTURA E1. ESFUERZOS EN TABLERO PARA TODOS LOS CASOS E HIPOTESIS DE CARGA

Frame	Station	OutputCase	CaseType	StepType	P	V2	V3	T	M2	M3	FrameElem	ElemStation
Text	m	Text	Text	Text	KN	KN	KN	KN-m	KN-m	KN-m	Text	m
1	43	SC_CARRIL_2	LinMoving	Max V3	-1.43	-86.71	0.03	-11.53	0.62	21.69	1-46	0
1	44	SC_CARRIL_2	LinMoving	Max V3	-1.43	-79.21	0.03	-7.78	0.59	108.40	1-47	0
1	45	SC_CARRIL_2	LinMoving	Max V3	-1.43	-71.71	0.03	-4.03	0.57	187.60	1-48	0
1	46	SC_CARRIL_2	LinMoving	Max V3	-1.43	-64.21	0.03	-0.28	0.54	259.31	1-49	0
1	47	SC_CARRIL_2	LinMoving	Max V3	-1.43	-56.71	0.03	3.47	0.52	323.51	1-50	0
1	48	SC_CARRIL_2	LinMoving	Max V3	-1.43	-49.21	0.03	7.22	0.49	380.21	1-51	0
1	49	SC_CARRIL_2	LinMoving	Max V3	-1.43	-41.71	0.03	10.97	0.47	429.42	1-52	0
1	50	SC_CARRIL_2	LinMoving	Max V3	-1.43	-34.21	0.03	14.72	0.44	471.12	1-53	0
1	51	SC_CARRIL_2	LinMoving	Max V3	-1.43	-26.71	0.03	18.47	0.42	505.33	1-54	0
1	52	SC_CARRIL_2	LinMoving	Max V3	-1.43	-19.21	0.03	22.22	0.39	532.03	1-55	0
1	53	SC_CARRIL_2	LinMoving	Max V3	-1.43	-11.71	0.03	25.97	0.36	551.24	1-56	0
1	54	SC_CARRIL_2	LinMoving	Max V3	-1.43	-4.21	0.03	29.72	0.34	562.94	1-57	0
1	55	SC_CARRIL_2	LinMoving	Max V3	-1.43	3.29	0.03	33.47	0.31	567.15	1-58	0
1	56	SC_CARRIL_2	LinMoving	Max V3	-1.43	10.79	0.03	37.22	0.29	563.85	1-59	0
1	57	SC_CARRIL_2	LinMoving	Max V3	-1.43	18.29	0.03	40.97	0.26	553.05	1-60	0
1	58	SC_CARRIL_2	LinMoving	Max V3	-1.43	25.79	0.03	44.72	0.24	534.76	1-61	0
1	59	SC_CARRIL_2	LinMoving	Max V3	-1.43	33.29	0.03	48.47	0.21	508.96	1-62	0
1	60	SC_CARRIL_2	LinMoving	Max V3	-1.43	40.79	0.03	52.22	0.19	475.67	1-63	0
1	61	SC_CARRIL_2	LinMoving	Max V3	-1.43	48.29	0.03	55.97	0.16	434.87	1-64	0
1	62	SC_CARRIL_2	LinMoving	Max V3	-1.43	55.79	0.03	59.72	0.14	386.58	1-65	0
1	63	SC_CARRIL_2	LinMoving	Max V3	-1.43	60.35	0.03	62.00	0.11	330.78	1-66	0
1	64	SC_CARRIL_2	LinMoving	Max V3	-1.43	60.40	0.03	62.02	0.09	270.43	1-67	0
1	65	SC_CARRIL_2	LinMoving	Max V3	-1.43	60.40	0.03	62.02	0.06	210.03	1-68	0
1	66	SC_CARRIL_2	LinMoving	Max V3	-1.43	60.40	0.03	62.02	0.04	149.62	1-69	0
1	67	SC_CARRIL_2	LinMoving	Max V3	-1.43	60.40	0.03	62.02	0.01	89.28	1-70	0
1	67.5	SC_CARRIL_2	LinMoving	Max V3	-1.43	60.40	0.03	62.03	0.00	59.17	1-71	0
1	68.5	SC_CARRIL_2	LinMoving	Max V3	0.00	0.00	0.00	0.00	0.00	0.00	1-72	0
1	0	SC_CARRIL_2	LinMoving	Min V3	0.00	0.00	0.00	0.00	0.00	0.00	1-1	0
1	0.5	SC_CARRIL_2	LinMoving	Min V3	-1.43	-60.54	-0.03	-62.10	-0.03	-1.23	1-2	0
1	1.5	SC_CARRIL_2	LinMoving	Min V3	-1.43	-60.54	-0.03	-62.09	0.00	59.22	1-3	0
1	2	SC_CARRIL_2	LinMoving	Min V3	-1.43	-60.54	-0.03	-62.09	0.01	89.43	1-4	0
1	3	SC_CARRIL_2	LinMoving	Min V3	-1.43	-60.54	-0.03	-62.09	0.03	149.98	1-5	0
1	4	SC_CARRIL_2	LinMoving	Min V3	-1.43	-60.54	-0.03	-62.09	0.06	210.52	1-6	0
1	5	SC_CARRIL_2	LinMoving	Min V3	-1.43	-60.54	-0.03	-62.09	0.09	271.06	1-7	0
1	6	SC_CARRIL_2	LinMoving	Min V3	-1.43	-60.47	-0.03	-62.06	0.11	331.54	1-8	0
1	7	SC_CARRIL_2	LinMoving	Min V3	-1.43	-55.76	-0.03	-59.70	0.14	387.30	1-9	0
1	8	SC_CARRIL_2	LinMoving	Min V3	-1.43	-48.26	-0.03	-55.95	0.16	435.57	1-10	0
1	9	SC_CARRIL_2	LinMoving	Min V3	-1.43	-40.76	-0.03	-52.20	0.19	476.34	1-11	0
1	10	SC_CARRIL_2	LinMoving	Min V3	-1.43	-33.26	-0.03	-48.45	0.21	509.61	1-12	0
1	11	SC_CARRIL_2	LinMoving	Min V3	-1.43	-25.76	-0.03	-44.70	0.24	535.38	1-13	0
1	12	SC_CARRIL_2	LinMoving	Min V3	-1.43	-18.26	-0.03	-40.95	0.26	553.65	1-14	0
1	13	SC_CARRIL_2	LinMoving	Min V3	-1.43	-10.76	-0.03	-37.20	0.29	564.42	1-15	0
1	14	SC_CARRIL_2	LinMoving	Min V3	-1.43	-3.26	-0.03	-33.45	0.31	567.69	1-16	0
1	15	SC_CARRIL_2	LinMoving	Min V3	-1.43	4.24	-0.03	-29.70	0.34	563.45	1-17	0
1	16	SC_CARRIL_2	LinMoving	Min V3	-1.43	11.74	-0.03	-25.95	0.36	551.72	1-18	0
1	17	SC_CARRIL_2	LinMoving	Min V3	-1.43	19.24	-0.03	-22.20	0.39	532.49	1-19	0
1	18	SC_CARRIL_2	LinMoving	Min V3	-1.43	26.74	-0.03	-18.45	0.42	505.76	1-20	0
1	19	SC_CARRIL_2	LinMoving	Min V3	-1.43	34.24	-0.03	-14.70	0.44	471.53	1-21	0
1	20	SC_CARRIL_2	LinMoving	Min V3	-1.43	41.73	-0.03	-10.95	0.47	429.80	1-22	0
1	21	SC_CARRIL_2	LinMoving	Min V3	-1.43	49.23	-0.03	-7.20	0.49	380.57	1-23	0
1	22	SC_CARRIL_2	LinMoving	Min V3	-1.43	56.73	-0.03	-3.45	0.52	323.84	1-24	0
1	23	SC_CARRIL_2	LinMoving	Min V3	-1.43	64.23	-0.03	0.30	0.54	259.61	1-25	0
1	24	SC_CARRIL_2	LinMoving	Min V3	-1.43	71.73	-0.03	4.05	0.57	187.88	1-26	0
1	25	SC_CARRIL_2	LinMoving	Min V3	-1.43	79.23	-0.03	7.80	0.59	108.64	1-27	0
1	26	SC_CARRIL_2	LinMoving	Min V3	-1.43	86.73	-0.03	11.55	0.62	21.91	1-28	0
1	27	SC_CARRIL_2	LinMoving	Min V3	-1.43	94.23	-0.03	15.30	0.64	-72.32	1-29	0
1	28	SC_CARRIL_2	LinMoving	Min V3	-1.43	101.73	-0.03	19.05	0.67	-174.05	1-30	0
1	29	SC_CARRIL_2	LinMoving	Min V3	-1.43	109.23	-0.03	22.80	0.69	-283.28	1-31	0
1	30	SC_CARRIL_2	LinMoving	Min V3	-1.43	116.73	-0.03	26.55	0.72	-400.01	1-32	0
1	31	SC_CARRIL_2	LinMoving	Min V3	-1.43	124.23	-0.03	30.30	0.75	-524.24	1-33	0
1	32	SC_CARRIL_2	LinMoving	Min V3	-1.43	135.48	-0.03	35.92	0.77	-655.97	1-34	0
1	33	SC_CARRIL_2	LinMoving	Min V3	-1.43	142.98	-0.03	39.67	0.80	-795.15	1-35	0
1	33.75	SC_CARRIL_2	LinMoving	Min V3	-1.43	146.73	-0.03	41.54	0.82	-905.20	1-36	0
1	34.5	SC_CARRIL_2	LinMoving	Min V3	-0.39	-5.05	0.00	-1.25	-0.05	-64.04	1-37	0
1	35.25	SC_CARRIL_2	LinMoving	Min V3	-0.39	-5.05	0.00	-1.25	-0.05	-60.26	1-38	0
1	36	SC_CARRIL_2	LinMoving	Min V3	-0.39	-5.05	0.00	-1.25	-0.05	-56.49	1-39	0
1	37	SC_CARRIL_2	LinMoving	Min V3	-0.39	-5.05	0.00	-1.25	-0.05	-51.45	1-40	0
1	38	SC_CARRIL_2	LinMoving	Min V3	-0.39	-5.05	0.00	-1.25	-0.05	-46.40	1-41	0
1	39	SC_CARRIL_2	LinMoving	Min V3	-0.39	-5.05	0.00	-1.25	-0.05	-41.36	1-42	0
1	40	SC_CARRIL_2	LinMoving	Min V3	-0.39	-5.05	0.00	-1.25	-0.05	-36.31	1-43	0
1	41	SC_CARRIL_2	LinMoving	Min V3	-0.39	-5.05	0.00	-1.25	-0.04	-31.27	1-44	0
1	42	SC_CARRIL_2	LinMoving	Min V3	-0.39	-5.05	0.00	-1.25	-0.04	-26.22	1-45	0
1	43	SC_CARRIL_2	LinMoving	Min V3	-0.39	-5.05	0.00	-1.25	-0.04	-21.18	1-46	0
1	44	SC_CARRIL_2	LinMoving	Min V3	-0.39	-5.05	0.00	-1.25	-0.04	-16.13	1-47	0
1	45	SC_CARRIL_2	LinMoving	Min V3	-0.39	-5.05	0.00	-1.25	-0.04	-11.09	1-48	0
1	46	SC_CARRIL_2	LinMoving	Min V3	-0.39	-5.05	0.00	-1.25	-0.04	-6.04	1-49	0
1	47	SC_CARRIL_2	LinMoving	Min V3	-0.39	-5.05	0.00	-1.25	-0.04	-1.00	1-50	0
1	48	SC_CARRIL_2	LinMoving	Min V3	-0.39	-5.05	0.00	-1.25	-0.04	4.05	1-51	0
1	49	SC_CARRIL_2	LinMoving	Min V3	-0.39	-5.05	0.00	-1.25	-0.03	9.09	1-52	0
1	50	SC_CARRIL_2	LinMoving	Min V3	-0.39	-5.05	0.00	-1.25	-0.03	14.14	1-53	0
1	51	SC_CARRIL_2	LinMoving	Min V3	-0.39	-5.05	0.00	-1.25	-0.03	19.18	1-54	0

ESTRUCTURA E1. ESFUERZOS EN TABLERO PARA TODOS LOS CASOS E HIPOTESIS DE CARGA

Frame	Station	OutputCase	CaseType	StepType	P	V2	V3	T	M2	M3	FrameElem	ElemStation
Text	m	Text	Text	Text	KN	KN	KN	KN-m	KN-m	KN-m	Text	m
1	52	SC_CARRIL_2	LinMoving	Min V3	-0.39	-5.05	0.00	-1.25	-0.03	24.23	1-55	0
1	53	SC_CARRIL_2	LinMoving	Min V3	-0.39	-5.05	0.00	-1.25	-0.03	29.27	1-56	0
1	54	SC_CARRIL_2	LinMoving	Min V3	-0.39	-5.05	0.00	-1.25	-0.03	34.32	1-57	0
1	55	SC_CARRIL_2	LinMoving	Min V3	-0.39	-5.05	0.00	-1.25	-0.03	39.36	1-58	0
1	56	SC_CARRIL_2	LinMoving	Min V3	-0.39	-5.05	0.00	-1.25	-0.03	44.41	1-59	0
1	57	SC_CARRIL_2	LinMoving	Min V3	-0.39	-5.05	0.00	-1.25	-0.02	49.45	1-60	0
1	58	SC_CARRIL_2	LinMoving	Min V3	-0.39	-5.05	0.00	-1.25	-0.02	54.49	1-61	0
1	59	SC_CARRIL_2	LinMoving	Min V3	-0.39	-5.05	0.00	-1.25	-0.02	59.54	1-62	0
1	60	SC_CARRIL_2	LinMoving	Min V3	-0.39	-5.05	0.00	-1.25	-0.02	64.58	1-63	0
1	61	SC_CARRIL_2	LinMoving	Min V3	-0.39	-5.05	0.00	-1.25	-0.02	69.63	1-64	0
1	62	SC_CARRIL_2	LinMoving	Min V3	-0.39	-5.05	0.00	-1.25	-0.02	74.67	1-65	0
1	63	SC_CARRIL_2	LinMoving	Min V3	-0.39	-2.11	0.00	0.22	-0.02	79.72	1-66	0
1	64	SC_CARRIL_2	LinMoving	Min V3	-0.39	5.34	0.00	3.94	-0.02	81.82	1-67	0
1	65	SC_CARRIL_2	LinMoving	Min V3	-0.39	12.84	0.00	7.69	-0.01	76.47	1-68	0
1	66	SC_CARRIL_2	LinMoving	Min V3	-0.39	20.34	0.00	11.44	-0.01	63.62	1-69	0
1	67	SC_CARRIL_2	LinMoving	Min V3	-0.39	27.84	0.00	15.19	-0.01	43.29	1-70	0
1	67.5	SC_CARRIL_2	LinMoving	Min V3	-0.39	27.84	0.00	15.19	-0.01	29.39	1-71	0
1	68.5	SC_CARRIL_2	LinMoving	Min V3	0.00	0.00	0.00	0.00	0.00	0.00	1-72	0
1	0	SC_CARRIL_2	LinMoving	Max T	0.00	0.00	0.00	0.00	0.00	0.00	1-1	0
1	0.5	SC_CARRIL_2	LinMoving	Max T	0.00	0.00	0.00	0.00	0.00	-0.08	1-2	0
1	1.5	SC_CARRIL_2	LinMoving	Max T	-0.03	0.00	0.00	0.09	0.00	0.09	1-3	0
1	2	SC_CARRIL_2	LinMoving	Max T	-0.03	0.00	0.00	0.09	0.00	0.08	1-4	0
1	3	SC_CARRIL_2	LinMoving	Max T	-0.06	0.29	0.00	0.23	0.00	7.25	1-5	0
1	4	SC_CARRIL_2	LinMoving	Max T	-0.10	0.86	0.00	0.46	-0.01	20.73	1-6	0
1	5	SC_CARRIL_2	LinMoving	Max T	-0.14	1.72	0.00	0.78	-0.01	39.63	1-7	0
1	6	SC_CARRIL_2	LinMoving	Max T	-0.20	2.85	0.00	1.20	-0.01	63.09	1-8	0
1	7	SC_CARRIL_2	LinMoving	Max T	-0.25	4.27	0.00	1.71	-0.01	90.26	1-9	0
1	8	SC_CARRIL_2	LinMoving	Max T	-0.31	5.97	0.00	2.33	-0.01	120.27	1-10	0
1	9	SC_CARRIL_2	LinMoving	Max T	-0.37	7.95	0.00	3.03	-0.01	152.31	1-11	0
1	10	SC_CARRIL_2	LinMoving	Max T	-0.44	10.21	0.00	3.84	-0.02	185.53	1-12	0
1	11	SC_CARRIL_2	LinMoving	Max T	-0.50	12.74	0.00	4.74	-0.02	219.13	1-13	0
1	12	SC_CARRIL_2	LinMoving	Max T	-0.57	15.54	0.00	5.74	-0.02	252.29	1-14	0
1	13	SC_CARRIL_2	LinMoving	Max T	-0.64	18.60	0.00	6.84	-0.01	284.24	1-15	0
1	14	SC_CARRIL_2	LinMoving	Max T	-0.70	21.93	0.00	8.03	-0.01	314.19	1-16	0
1	15	SC_CARRIL_2	LinMoving	Max T	-0.77	25.52	0.00	9.32	-0.01	341.41	1-17	0
1	16	SC_CARRIL_2	LinMoving	Max T	-0.83	29.37	0.00	10.71	0.00	365.16	1-18	0
1	17	SC_CARRIL_2	LinMoving	Max T	-0.90	33.47	0.00	12.19	0.00	384.72	1-19	0
1	18	SC_CARRIL_2	LinMoving	Max T	-0.96	37.82	0.00	13.77	0.01	399.42	1-20	0
1	19	SC_CARRIL_2	LinMoving	Max T	-1.02	42.41	0.00	15.45	0.02	408.59	1-21	0
1	20	SC_CARRIL_2	LinMoving	Max T	-1.07	47.23	0.00	17.23	0.02	411.60	1-22	0
1	21	SC_CARRIL_2	LinMoving	Max T	-1.12	52.29	0.00	19.10	0.04	407.84	1-23	0
1	22	SC_CARRIL_2	LinMoving	Max T	-1.17	57.57	0.00	21.07	0.05	396.73	1-24	0
1	23	SC_CARRIL_2	LinMoving	Max T	-1.22	63.06	0.00	23.13	0.06	377.73	1-25	0
1	24	SC_CARRIL_2	LinMoving	Max T	-1.26	68.77	0.00	25.29	0.08	350.33	1-26	0
1	25	SC_CARRIL_2	LinMoving	Max T	-1.30	74.69	-0.01	27.55	0.10	314.05	1-27	0
1	26	SC_CARRIL_2	LinMoving	Max T	-1.33	80.80	-0.01	29.91	0.12	268.45	1-28	0
1	27	SC_CARRIL_2	LinMoving	Max T	-1.36	87.10	-0.01	32.36	0.14	213.12	1-29	0
1	28	SC_CARRIL_2	LinMoving	Max T	-1.39	93.58	-0.01	34.91	0.16	147.70	1-30	0
1	29	SC_CARRIL_2	LinMoving	Max T	-1.41	100.24	-0.01	37.55	0.19	71.87	1-31	0
1	30	SC_CARRIL_2	LinMoving	Max T	-1.43	107.06	-0.01	40.30	0.22	-14.56	1-32	0
1	31	SC_CARRIL_2	LinMoving	Max T	-1.44	114.03	-0.01	43.14	0.25	-112.11	1-33	0
1	32	SC_CARRIL_2	LinMoving	Max T	-1.46	125.00	-0.01	47.87	0.29	-218.76	1-34	0
1	33	SC_CARRIL_2	LinMoving	Max T	-1.46	132.25	-0.01	50.92	0.33	-339.47	1-35	0
1	33.75	SC_CARRIL_2	LinMoving	Max T	-1.47	135.80	-0.01	52.23	0.36	-437.71	1-36	0
1	34.5	SC_CARRIL_2	LinMoving	Max T	-0.35	-15.96	0.01	8.90	0.38	-540.44	1-37	0
1	35.25	SC_CARRIL_2	LinMoving	Max T	-0.35	-15.95	0.01	9.45	0.40	-527.76	1-38	0
1	36	SC_CARRIL_2	LinMoving	Max T	-0.35	-15.75	0.01	10.02	0.42	-512.21	1-39	0
1	37	SC_CARRIL_2	LinMoving	Max T	-0.36	-15.59	0.01	10.79	0.43	-486.80	1-40	0
1	38	SC_CARRIL_2	LinMoving	Max T	-0.37	-15.22	0.02	11.60	0.45	-458.62	1-41	0
1	39	SC_CARRIL_2	LinMoving	Max T	-0.38	-14.69	0.02	12.51	0.45	-426.82	1-42	0
1	40	SC_CARRIL_2	LinMoving	Max T	-0.40	-14.01	0.02	13.52	0.46	-391.60	1-43	0
1	41	SC_CARRIL_2	LinMoving	Max T	-0.42	-13.17	0.02	14.62	0.46	-353.18	1-44	0
1	42	SC_CARRIL_2	LinMoving	Max T	-0.45	-12.15	0.02	15.83	0.46	-311.85	1-45	0
1	43	SC_CARRIL_2	LinMoving	Max T	-0.48	-10.95	0.02	17.12	0.46	-267.93	1-46	0
1	44	SC_CARRIL_2	LinMoving	Max T	-0.52	-9.57	0.02	18.52	0.46	-221.79	1-47	0
1	45	SC_CARRIL_2	LinMoving	Max T	-0.55	-7.98	0.02	20.01	0.45	-173.82	1-48	0
1	46	SC_CARRIL_2	LinMoving	Max T	-0.59	-6.19	0.02	21.60	0.44	-124.47	1-49	0
1	47	SC_CARRIL_2	LinMoving	Max T	-0.64	-4.19	0.02	23.28	0.43	-74.22	1-50	0
1	48	SC_CARRIL_2	LinMoving	Max T	-0.69	-1.97	0.02	25.06	0.42	-23.58	1-51	0
1	49	SC_CARRIL_2	LinMoving	Max T	-0.74	0.48	0.02	26.94	0.41	26.91	1-52	0
1	50	SC_CARRIL_2	LinMoving	Max T	-0.80	3.15	0.02	28.92	0.39	76.67	1-53	0
1	51	SC_CARRIL_2	LinMoving	Max T	-0.86	6.06	0.02	30.99	0.38	125.09	1-54	0
1	52	SC_CARRIL_2	LinMoving	Max T	-0.92	9.22	0.02	33.16	0.36	171.53	1-55	0
1	53	SC_CARRIL_2	LinMoving	Max T	-0.98	12.62	0.02	35.42	0.34	215.35	1-56	0
1	54	SC_CARRIL_2	LinMoving	Max T	-1.04	16.27	0.02	37.79	0.32	255.85	1-57	0
1	55	SC_CARRIL_2	LinMoving	Max T	-1.11	20.18	0.02	40.25	0.30	292.31	1-58	0
1	56	SC_CARRIL_2	LinMoving	Max T	-1.18	24.35	0.02	42.80	0.28	324.02	1-59	0
1	57	SC_CARRIL_2	LinMoving	Max T	-1.24	28.78	0.02	45.46	0.26	350.21	1-60	0
1	58	SC_CARRIL_2	LinMoving	Max T	-1.31	33.48	0.02	48.21	0.23	370.13	1-61	0
1	59	SC_CARRIL_2	LinMoving	Max T	-1.38	38.45	0.02	51.05	0.21	382.97	1-62	0
1	60	SC_CARRIL_2	LinMoving	Max T	-1.44	43.70	0.03	54.00	0.18	387.94	1-63	0

ESTRUCTURA E1. ESFUERZOS EN TABLERO PARA TODOS LOS CASOS E HIPOTESIS DE CARGA

Frame	Station	OutputCase	CaseType	StepType	P	V2	V3	T	M2	M3	FrameElem	ElemStation
Text	m	Text	Text	Text	KN	KN	KN	KN-m	KN-m	KN-m	Text	m
1	61	SC_CARRIL_2	LinMoving	Max T	-1.50	49.22	0.03	57.04	0.16	384.23	1-64	0
1	62	SC_CARRIL_2	LinMoving	Max T	-1.56	55.02	0.03	60.18	0.13	370.99	1-65	0
1	63	SC_CARRIL_2	LinMoving	Max T	-1.62	61.10	0.03	63.41	0.10	347.41	1-66	0
1	64	SC_CARRIL_2	LinMoving	Max T	-1.67	67.46	0.03	66.74	0.08	312.61	1-67	0
1	65	SC_CARRIL_2	LinMoving	Max T	-1.71	74.10	0.03	70.17	0.05	265.76	1-68	0
1	66	SC_CARRIL_2	LinMoving	Max T	-1.75	81.03	0.02	73.70	0.03	205.99	1-69	0
1	67	SC_CARRIL_2	LinMoving	Max T	-1.79	88.25	0.02	77.31	0.00	132.48	1-70	0
1	67.5	SC_CARRIL_2	LinMoving	Max T	-1.79	88.25	0.02	77.31	-0.01	88.48	1-71	0
1	68.5	SC_CARRIL_2	LinMoving	Max T	0.00	0.00	0.00	0.00	0.00	0.00	1-72	0
1	0	SC_CARRIL_2	LinMoving	Min T	0.00	0.00	0.00	0.00	0.00	0.00	1-1	0
1	0.5	SC_CARRIL_2	LinMoving	Min T	-1.81	-95.74	-0.02	-80.97	-0.04	-3.36	1-2	0
1	1.5	SC_CARRIL_2	LinMoving	Min T	-1.79	-88.25	-0.02	-77.31	-0.01	88.36	1-3	0
1	2	SC_CARRIL_2	LinMoving	Min T	-1.79	-88.25	-0.02	-77.31	0.00	132.41	1-4	0
1	3	SC_CARRIL_2	LinMoving	Min T	-1.75	-81.03	-0.02	-73.70	0.03	205.99	1-5	0
1	4	SC_CARRIL_2	LinMoving	Min T	-1.71	-74.10	-0.03	-70.17	0.05	265.76	1-6	0
1	5	SC_CARRIL_2	LinMoving	Min T	-1.67	-67.46	-0.03	-66.74	0.08	312.61	1-7	0
1	6	SC_CARRIL_2	LinMoving	Min T	-1.62	-61.10	-0.03	-63.41	0.10	347.41	1-8	0
1	7	SC_CARRIL_2	LinMoving	Min T	-1.56	-55.02	-0.03	-60.18	0.13	370.99	1-9	0
1	8	SC_CARRIL_2	LinMoving	Min T	-1.50	-49.22	-0.03	-57.04	0.16	384.23	1-10	0
1	9	SC_CARRIL_2	LinMoving	Min T	-1.44	-43.70	-0.03	-54.00	0.18	387.94	1-11	0
1	10	SC_CARRIL_2	LinMoving	Min T	-1.38	-38.45	-0.02	-51.05	0.21	382.97	1-12	0
1	11	SC_CARRIL_2	LinMoving	Min T	-1.31	-33.48	-0.02	-48.21	0.23	370.13	1-13	0
1	12	SC_CARRIL_2	LinMoving	Min T	-1.24	-28.78	-0.02	-45.46	0.25	350.21	1-14	0
1	13	SC_CARRIL_2	LinMoving	Min T	-1.18	-24.35	-0.02	-42.80	0.28	324.02	1-15	0
1	14	SC_CARRIL_2	LinMoving	Min T	-1.11	-20.18	-0.02	-40.25	0.30	292.31	1-16	0
1	15	SC_CARRIL_2	LinMoving	Min T	-1.04	-16.27	-0.02	-37.79	0.32	255.84	1-17	0
1	16	SC_CARRIL_2	LinMoving	Min T	-0.98	-12.62	-0.02	-35.42	0.34	215.35	1-18	0
1	17	SC_CARRIL_2	LinMoving	Min T	-0.92	-9.22	-0.02	-33.16	0.36	171.53	1-19	0
1	18	SC_CARRIL_2	LinMoving	Min T	-0.86	-6.06	-0.02	-30.99	0.38	125.09	1-20	0
1	19	SC_CARRIL_2	LinMoving	Min T	-0.80	-3.15	-0.02	-28.92	0.39	76.67	1-21	0
1	20	SC_CARRIL_2	LinMoving	Min T	-0.74	-0.48	-0.02	-26.94	0.41	26.91	1-22	0
1	21	SC_CARRIL_2	LinMoving	Min T	-0.69	1.97	-0.02	-25.06	0.42	-23.58	1-23	0
1	22	SC_CARRIL_2	LinMoving	Min T	-0.64	4.19	-0.02	-23.28	0.43	-74.22	1-24	0
1	23	SC_CARRIL_2	LinMoving	Min T	-0.59	6.19	-0.02	-21.60	0.44	-124.47	1-25	0
1	24	SC_CARRIL_2	LinMoving	Min T	-0.55	7.98	-0.02	-20.01	0.45	-173.82	1-26	0
1	25	SC_CARRIL_2	LinMoving	Min T	-0.52	9.57	-0.02	-18.52	0.46	-221.79	1-27	0
1	26	SC_CARRIL_2	LinMoving	Min T	-0.48	10.95	-0.02	-17.12	0.46	-267.93	1-28	0
1	27	SC_CARRIL_2	LinMoving	Min T	-0.45	12.15	-0.02	-15.82	0.46	-311.85	1-29	0
1	28	SC_CARRIL_2	LinMoving	Min T	-0.42	13.17	-0.02	-14.62	0.46	-353.18	1-30	0
1	29	SC_CARRIL_2	LinMoving	Min T	-0.40	14.01	-0.02	-13.52	0.46	-391.60	1-31	0
1	30	SC_CARRIL_2	LinMoving	Min T	-0.38	14.69	-0.02	-12.51	0.45	-426.82	1-32	0
1	31	SC_CARRIL_2	LinMoving	Min T	-0.37	15.22	-0.02	-11.60	0.44	-458.62	1-33	0
1	32	SC_CARRIL_2	LinMoving	Min T	-0.36	15.50	-0.01	-10.71	0.43	-488.72	1-34	0
1	33	SC_CARRIL_2	LinMoving	Min T	-0.35	15.75	-0.01	-10.02	0.42	-512.19	1-35	0
1	33.75	SC_CARRIL_2	LinMoving	Min T	-0.35	15.95	-0.01	-9.45	0.40	-527.76	1-36	0
1	34.5	SC_CARRIL_2	LinMoving	Min T	-1.47	-143.29	0.01	-55.43	0.40	-542.60	1-37	0
1	35.25	SC_CARRIL_2	LinMoving	Min T	-1.47	-135.80	0.01	-52.23	0.36	-437.71	1-38	0
1	36	SC_CARRIL_2	LinMoving	Min T	-1.46	-132.25	0.01	-50.92	0.33	-339.52	1-39	0
1	37	SC_CARRIL_2	LinMoving	Min T	-1.45	-121.16	0.01	-46.07	0.29	-220.68	1-40	0
1	38	SC_CARRIL_2	LinMoving	Min T	-1.44	-114.03	0.01	-43.14	0.25	-112.11	1-41	0
1	39	SC_CARRIL_2	LinMoving	Min T	-1.43	-107.06	0.01	-40.30	0.22	-14.56	1-42	0
1	40	SC_CARRIL_2	LinMoving	Min T	-1.41	-100.24	0.01	-37.55	0.19	71.87	1-43	0
1	41	SC_CARRIL_2	LinMoving	Min T	-1.39	-93.58	0.01	-34.91	0.16	147.70	1-44	0
1	42	SC_CARRIL_2	LinMoving	Min T	-1.36	-87.10	0.01	-32.36	0.14	213.12	1-45	0
1	43	SC_CARRIL_2	LinMoving	Min T	-1.33	-80.80	0.01	-29.91	0.12	268.45	1-46	0
1	44	SC_CARRIL_2	LinMoving	Min T	-1.30	-74.69	0.01	-27.55	0.10	314.05	1-47	0
1	45	SC_CARRIL_2	LinMoving	Min T	-1.26	-68.77	0.00	-25.29	0.08	350.33	1-48	0
1	46	SC_CARRIL_2	LinMoving	Min T	-1.22	-63.06	0.00	-23.13	0.06	377.73	1-49	0
1	47	SC_CARRIL_2	LinMoving	Min T	-1.17	-57.57	0.00	-21.07	0.05	396.73	1-50	0
1	48	SC_CARRIL_2	LinMoving	Min T	-1.12	-52.29	0.00	-19.10	0.04	407.84	1-51	0
1	49	SC_CARRIL_2	LinMoving	Min T	-1.07	-47.23	0.00	-17.23	0.02	411.60	1-52	0
1	50	SC_CARRIL_2	LinMoving	Min T	-1.02	-42.41	0.00	-15.45	0.02	408.59	1-53	0
1	51	SC_CARRIL_2	LinMoving	Min T	-0.96	-37.82	0.00	-13.77	0.01	399.42	1-54	0
1	52	SC_CARRIL_2	LinMoving	Min T	-0.90	-33.47	0.00	-12.19	0.00	384.72	1-55	0
1	53	SC_CARRIL_2	LinMoving	Min T	-0.83	-29.37	0.00	-10.71	0.00	365.16	1-56	0
1	54	SC_CARRIL_2	LinMoving	Min T	-0.77	-25.52	0.00	-9.32	-0.01	341.41	1-57	0
1	55	SC_CARRIL_2	LinMoving	Min T	-0.70	-21.93	0.00	-8.03	-0.01	314.19	1-58	0
1	56	SC_CARRIL_2	LinMoving	Min T	-0.64	-18.60	0.00	-6.84	-0.01	284.24	1-59	0
1	57	SC_CARRIL_2	LinMoving	Min T	-0.57	-15.54	0.00	-5.74	-0.02	252.29	1-60	0
1	58	SC_CARRIL_2	LinMoving	Min T	-0.50	-12.74	0.00	-4.74	-0.02	219.13	1-61	0
1	59	SC_CARRIL_2	LinMoving	Min T	-0.44	-10.21	0.00	-3.84	-0.02	185.53	1-62	0
1	60	SC_CARRIL_2	LinMoving	Min T	-0.37	-7.95	0.00	-3.03	-0.01	152.31	1-63	0
1	61	SC_CARRIL_2	LinMoving	Min T	-0.31	-5.97	0.00	-2.33	-0.01	120.27	1-64	0
1	62	SC_CARRIL_2	LinMoving	Min T	-0.25	-4.27	0.00	-1.71	-0.01	90.26	1-65	0
1	63	SC_CARRIL_2	LinMoving	Min T	-0.20	-2.85	0.00	-1.20	-0.01	63.09	1-66	0
1	64	SC_CARRIL_2	LinMoving	Min T	-0.14	-1.72	0.00	-0.78	-0.01	39.63	1-67	0
1	65	SC_CARRIL_2	LinMoving	Min T	-0.10	-0.86	0.00	-0.46	-0.01	20.73	1-68	0
1	66	SC_CARRIL_2	LinMoving	Min T	-0.06	-0.29	0.00	-0.23	0.00	7.25	1-69	0
1	67	SC_CARRIL_2	LinMoving	Min T	-0.03	0.00	0.00	-0.09	0.00	0.09	1-70	0
1	67.5	SC_CARRIL_2	LinMoving	Min T	-0.03	0.00	0.00	-0.09	0.00	0.09	1-71	0
1	68.5	SC_CARRIL_2	LinMoving	Min T	0.00	-3.75	0.00	-1.87	0.00	-1.87	1-72	0

ESTRUCTURA E1. ESFUERZOS EN TABLERO PARA TODOS LOS CASOS E HIPOTESIS DE CARGA

Frame	Station	OutputCase	CaseType	StepType	P	V2	V3	T	M2	M3	FrameElem	ElemStation
Text	m	Text	Text	Text	KN	KN	KN	KN-m	KN-m	KN-m	Text	m
1	0	SC_CARRIL_2	LinMoving	Max M2	0.00	0.00	0.00	0.00	0.00	0.00	1-1	0
1	0.5	SC_CARRIL_2	LinMoving	Max M2	0.00	0.00	0.00	0.00	0.00	0.00	1-2	0
1	1.5	SC_CARRIL_2	LinMoving	Max M2	-0.21	5.69	-0.02	-16.90	0.01	-5.88	1-3	0
1	2	SC_CARRIL_2	LinMoving	Max M2	-0.40	0.36	-0.02	-23.01	0.02	-0.93	1-4	0
1	3	SC_CARRIL_2	LinMoving	Max M2	-0.66	-10.15	-0.02	-31.57	0.04	24.73	1-5	0
1	4	SC_CARRIL_2	LinMoving	Max M2	-0.83	-18.18	-0.02	-37.16	0.07	62.83	1-6	0
1	5	SC_CARRIL_2	LinMoving	Max M2	-0.94	-24.17	-0.03	-41.06	0.09	107.87	1-7	0
1	6	SC_CARRIL_2	LinMoving	Max M2	-1.02	-28.74	-0.03	-43.91	0.12	157.10	1-8	0
1	7	SC_CARRIL_2	LinMoving	Max M2	-1.07	-32.32	-0.03	-46.09	0.14	209.04	1-9	0
1	8	SC_CARRIL_2	LinMoving	Max M2	-1.12	-35.19	-0.03	-47.80	0.17	262.82	1-10	0
1	9	SC_CARRIL_2	LinMoving	Max M2	-1.15	-37.53	-0.03	-49.19	0.19	317.92	1-11	0
1	10	SC_CARRIL_2	LinMoving	Max M2	-1.18	-39.20	-0.03	-50.19	0.22	373.69	1-12	0
1	11	SC_CARRIL_2	LinMoving	Max M2	-1.20	-32.82	-0.03	-47.13	0.24	421.06	1-13	0
1	12	SC_CARRIL_2	LinMoving	Max M2	-1.22	-24.64	-0.03	-43.14	0.27	456.85	1-14	0
1	13	SC_CARRIL_2	LinMoving	Max M2	-1.24	-16.57	-0.03	-39.20	0.29	482.09	1-15	0
1	14	SC_CARRIL_2	LinMoving	Max M2	-1.25	-8.60	-0.03	-35.29	0.32	497.50	1-16	0
1	15	SC_CARRIL_2	LinMoving	Max M2	-1.26	-0.69	-0.03	-31.40	0.34	503.58	1-17	0
1	16	SC_CARRIL_2	LinMoving	Max M2	-1.27	7.16	-0.03	-27.53	0.37	500.71	1-18	0
1	17	SC_CARRIL_2	LinMoving	Max M2	-1.28	14.96	-0.03	-23.67	0.39	489.18	1-19	0
1	18	SC_CARRIL_2	LinMoving	Max M2	-1.29	22.73	-0.03	-19.83	0.42	469.19	1-20	0
1	19	SC_CARRIL_2	LinMoving	Max M2	-1.30	30.46	-0.03	-16.00	0.44	440.91	1-21	0
1	20	SC_CARRIL_2	LinMoving	Max M2	-1.30	38.17	-0.03	-12.18	0.47	404.47	1-22	0
1	21	SC_CARRIL_2	LinMoving	Max M2	-1.31	45.86	-0.03	-8.36	0.49	359.97	1-23	0
1	22	SC_CARRIL_2	LinMoving	Max M2	-1.32	53.53	-0.03	-4.56	0.52	307.49	1-24	0
1	23	SC_CARRIL_2	LinMoving	Max M2	-1.32	61.19	-0.03	-0.75	0.54	247.11	1-25	0
1	24	SC_CARRIL_2	LinMoving	Max M2	-1.32	68.83	-0.03	3.05	0.57	178.87	1-26	0
1	25	SC_CARRIL_2	LinMoving	Max M2	-1.33	76.45	-0.03	6.84	0.59	102.83	1-27	0
1	26	SC_CARRIL_2	LinMoving	Max M2	-1.33	84.07	-0.03	10.63	0.62	19.02	1-28	0
1	27	SC_CARRIL_2	LinMoving	Max M2	-1.34	91.68	-0.03	14.42	0.65	-72.53	1-29	0
1	28	SC_CARRIL_2	LinMoving	Max M2	-1.34	99.28	-0.03	18.20	0.67	-171.79	1-30	0
1	29	SC_CARRIL_2	LinMoving	Max M2	-1.34	106.87	-0.03	21.98	0.70	-278.73	1-31	0
1	30	SC_CARRIL_2	LinMoving	Max M2	-1.35	114.45	-0.03	25.76	0.72	-393.34	1-32	0
1	31	SC_CARRIL_2	LinMoving	Max M2	-1.35	122.03	-0.03	29.54	0.75	-515.60	1-33	0
1	32	SC_CARRIL_2	LinMoving	Max M2	-1.35	133.36	-0.03	35.19	0.77	-645.49	1-34	0
1	33	SC_CARRIL_2	LinMoving	Max M2	-1.35	140.93	-0.03	38.96	0.80	-782.95	1-35	0
1	33.75	SC_CARRIL_2	LinMoving	Max M2	-1.35	144.72	-0.03	40.85	0.82	-891.78	1-36	0
1	34.5	SC_CARRIL_2	LinMoving	Max M2	-1.36	-152.24	0.03	-44.60	0.84	-1004.42	1-37	0
1	35.25	SC_CARRIL_2	LinMoving	Max M2	-1.35	-144.70	0.03	-40.84	0.82	-891.80	1-38	0
1	36	SC_CARRIL_2	LinMoving	Max M2	-1.35	-140.90	0.03	-38.95	0.80	-783.04	1-39	0
1	37	SC_CARRIL_2	LinMoving	Max M2	-1.35	-129.58	0.03	-33.30	0.77	-645.56	1-40	0
1	38	SC_CARRIL_2	LinMoving	Max M2	-1.35	-122.01	0.03	-29.52	0.75	-515.70	1-41	0
1	39	SC_CARRIL_2	LinMoving	Max M2	-1.34	-114.43	0.03	-25.75	0.72	-393.46	1-42	0
1	40	SC_CARRIL_2	LinMoving	Max M2	-1.34	-106.84	0.03	-21.97	0.70	-278.88	1-43	0
1	41	SC_CARRIL_2	LinMoving	Max M2	-1.34	-99.25	0.03	-18.19	0.67	-171.97	1-44	0
1	42	SC_CARRIL_2	LinMoving	Max M2	-1.34	-91.65	0.03	-14.40	0.65	-72.74	1-45	0
1	43	SC_CARRIL_2	LinMoving	Max M2	-1.33	-84.04	0.03	-10.61	0.62	18.78	1-46	0
1	44	SC_CARRIL_2	LinMoving	Max M2	-1.33	-76.43	0.03	-6.82	0.59	102.57	1-47	0
1	45	SC_CARRIL_2	LinMoving	Max M2	-1.32	-68.80	0.03	-3.03	0.57	178.58	1-48	0
1	46	SC_CARRIL_2	LinMoving	Max M2	-1.32	-61.16	0.03	0.77	0.54	246.79	1-49	0
1	47	SC_CARRIL_2	LinMoving	Max M2	-1.31	-53.50	0.03	4.57	0.52	307.15	1-50	0
1	48	SC_CARRIL_2	LinMoving	Max M2	-1.31	-45.84	0.03	8.38	0.49	359.59	1-51	0
1	49	SC_CARRIL_2	LinMoving	Max M2	-1.30	-38.15	0.03	12.19	0.47	404.07	1-52	0
1	50	SC_CARRIL_2	LinMoving	Max M2	-1.30	-30.44	0.03	16.01	0.44	440.48	1-53	0
1	51	SC_CARRIL_2	LinMoving	Max M2	-1.29	-22.70	0.03	19.85	0.42	468.73	1-54	0
1	52	SC_CARRIL_2	LinMoving	Max M2	-1.28	-14.93	0.03	23.69	0.39	488.70	1-55	0
1	53	SC_CARRIL_2	LinMoving	Max M2	-1.27	-7.13	0.03	27.54	0.37	500.20	1-56	0
1	54	SC_CARRIL_2	LinMoving	Max M2	-1.26	0.72	0.03	31.41	0.34	503.04	1-57	0
1	55	SC_CARRIL_2	LinMoving	Max M2	-1.25	8.62	0.03	35.30	0.32	496.94	1-58	0
1	56	SC_CARRIL_2	LinMoving	Max M2	-1.24	16.60	0.03	39.21	0.29	481.51	1-59	0
1	57	SC_CARRIL_2	LinMoving	Max M2	-1.22	24.66	0.03	43.16	0.27	456.25	1-60	0
1	58	SC_CARRIL_2	LinMoving	Max M2	-1.20	32.84	0.03	47.14	0.24	420.45	1-61	0
1	59	SC_CARRIL_2	LinMoving	Max M2	-1.18	39.15	0.03	50.17	0.22	373.06	1-62	0
1	60	SC_CARRIL_2	LinMoving	Max M2	-1.15	37.47	0.03	49.16	0.19	317.38	1-63	0
1	61	SC_CARRIL_2	LinMoving	Max M2	-1.12	35.13	0.03	47.78	0.17	262.40	1-64	0
1	62	SC_CARRIL_2	LinMoving	Max M2	-1.07	32.27	0.03	46.07	0.14	208.72	1-65	0
1	63	SC_CARRIL_2	LinMoving	Max M2	-1.02	28.70	0.03	43.90	0.12	156.88	1-66	0
1	64	SC_CARRIL_2	LinMoving	Max M2	-0.94	24.14	0.03	41.05	0.09	107.74	1-67	0
1	65	SC_CARRIL_2	LinMoving	Max M2	-0.83	18.16	0.02	37.16	0.07	62.77	1-68	0
1	66	SC_CARRIL_2	LinMoving	Max M2	-0.67	10.14	0.02	31.58	0.04	24.71	1-69	0
1	67	SC_CARRIL_2	LinMoving	Max M2	-0.40	-0.36	0.02	23.03	0.02	-0.91	1-70	0
1	67.5	SC_CARRIL_2	LinMoving	Max M2	-0.21	-5.70	0.02	16.92	0.01	-5.88	1-71	0
1	68.5	SC_CARRIL_2	LinMoving	Max M2	0.00	0.00	0.00	0.00	0.00	0.00	1-72	0
1	0	SC_CARRIL_2	LinMoving	Min M2	0.00	0.00	0.00	0.00	0.00	0.00	1-1	0
1	0.5	SC_CARRIL_2	LinMoving	Min M2	-1.81	-95.74	-0.02	-80.97	-0.04	-3.43	1-2	0
1	1.5	SC_CARRIL_2	LinMoving	Min M2	-1.61	-93.93	-0.01	-60.31	-0.02	94.32	1-3	0
1	2	SC_CARRIL_2	LinMoving	Min M2	-1.41	-88.61	0.00	-54.21	-0.02	133.42	1-4	0
1	3	SC_CARRIL_2	LinMoving	Min M2	-1.15	-70.60	0.00	-41.89	-0.02	188.52	1-5	0
1	4	SC_CARRIL_2	LinMoving	Min M2	-0.98	-55.06	0.00	-32.55	-0.02	223.67	1-6	0
1	5	SC_CARRIL_2	LinMoving	Min M2	-0.87	-41.57	0.00	-24.91	-0.02	244.38	1-7	0
1	6	SC_CARRIL_2	LinMoving	Min M2	-0.80	-29.50	0.00	-18.30	-0.02	253.40	1-8	0
1	7	SC_CARRIL_2	LinMoving	Min M2	-0.74	-18.43	0.00	-12.37	-0.02	252.21	1-9	0

ESTRUCTURA E1. ESFUERZOS EN TABLERO PARA TODOS LOS CASOS E HIPOTESIS DE CARGA

Frame	Station	OutputCase	CaseType	StepType	P	V2	V3	T	M2	M3	FrameElem	ElemStation
Text	m	Text	Text	Text	KN	KN	KN	KN-m	KN-m	KN-m	Text	m
1	8	SC_CARRIL_2	LinMoving	Min M2	-0.70	-8.06	0.00	-6.91	-0.02	241.68	1-10	0
1	9	SC_CARRIL_2	LinMoving	Min M2	-0.66	1.79	0.00	-1.77	-0.02	222.33	1-11	0
1	10	SC_CARRIL_2	LinMoving	Min M2	-0.63	10.95	0.00	2.97	-0.02	194.81	1-12	0
1	11	SC_CARRIL_2	LinMoving	Min M2	-0.61	12.07	0.00	3.66	-0.02	168.19	1-13	0
1	12	SC_CARRIL_2	LinMoving	Min M2	-0.59	11.39	0.00	3.43	-0.03	145.65	1-14	0
1	13	SC_CARRIL_2	LinMoving	Min M2	-0.58	10.83	0.00	3.23	-0.03	126.16	1-15	0
1	14	SC_CARRIL_2	LinMoving	Min M2	-0.56	10.35	0.00	3.07	-0.03	109.01	1-16	0
1	15	SC_CARRIL_2	LinMoving	Min M2	-0.55	9.95	0.00	2.93	-0.03	93.68	1-17	0
1	16	SC_CARRIL_2	LinMoving	Min M2	-0.54	9.60	0.00	2.81	-0.03	79.79	1-18	0
1	17	SC_CARRIL_2	LinMoving	Min M2	-0.53	9.29	0.00	2.71	-0.03	67.08	1-19	0
1	18	SC_CARRIL_2	LinMoving	Min M2	-0.52	9.03	0.00	2.62	-0.03	55.32	1-20	0
1	19	SC_CARRIL_2	LinMoving	Min M2	-0.52	8.79	0.00	2.54	-0.03	44.35	1-21	0
1	20	SC_CARRIL_2	LinMoving	Min M2	-0.51	8.58	0.00	2.46	-0.04	34.04	1-22	0
1	21	SC_CARRIL_2	LinMoving	Min M2	-0.50	8.39	0.00	2.40	-0.04	24.29	1-23	0
1	22	SC_CARRIL_2	LinMoving	Min M2	-0.50	8.22	0.00	2.34	-0.04	15.02	1-24	0
1	23	SC_CARRIL_2	LinMoving	Min M2	-0.49	8.07	0.00	2.29	-0.04	6.15	1-25	0
1	24	SC_CARRIL_2	LinMoving	Min M2	-0.49	7.93	0.00	2.24	-0.04	-2.36	1-26	0
1	25	SC_CARRIL_2	LinMoving	Min M2	-0.48	7.80	0.00	2.20	-0.04	-10.67	1-27	0
1	26	SC_CARRIL_2	LinMoving	Min M2	-0.48	7.68	0.00	2.16	-0.04	-18.50	1-28	0
1	27	SC_CARRIL_2	LinMoving	Min M2	-0.48	7.58	0.00	2.12	-0.04	-26.20	1-29	0
1	28	SC_CARRIL_2	LinMoving	Min M2	-0.47	7.48	0.00	2.08	-0.04	-33.70	1-30	0
1	29	SC_CARRIL_2	LinMoving	Min M2	-0.47	7.38	0.00	2.05	-0.05	-41.00	1-31	0
1	30	SC_CARRIL_2	LinMoving	Min M2	-0.47	7.30	0.00	2.02	-0.05	-48.14	1-32	0
1	31	SC_CARRIL_2	LinMoving	Min M2	-0.47	7.22	0.00	2.00	-0.05	-55.13	1-33	0
1	32	SC_CARRIL_2	LinMoving	Min M2	-0.46	7.14	0.00	1.97	-0.05	-61.99	1-34	0
1	33	SC_CARRIL_2	LinMoving	Min M2	-0.46	7.07	0.00	1.95	-0.05	-68.71	1-35	0
1	33.75	SC_CARRIL_2	LinMoving	Min M2	-0.46	7.03	0.00	1.93	-0.05	-73.69	1-36	0
1	34.5	SC_CARRIL_2	LinMoving	Min M2	-0.46	-7.01	0.00	-1.93	-0.05	-78.51	1-37	0
1	35.25	SC_CARRIL_2	LinMoving	Min M2	-0.46	-7.05	0.00	-1.94	-0.05	-73.67	1-38	0
1	36	SC_CARRIL_2	LinMoving	Min M2	-0.46	-7.10	0.00	-1.96	-0.05	-68.58	1-39	0
1	37	SC_CARRIL_2	LinMoving	Min M2	-0.46	-7.17	0.00	-1.98	-0.05	-61.92	1-40	0
1	38	SC_CARRIL_2	LinMoving	Min M2	-0.47	-7.25	0.00	-2.01	-0.05	-55.04	1-41	0
1	39	SC_CARRIL_2	LinMoving	Min M2	-0.47	-7.33	0.00	-2.04	-0.05	-48.02	1-42	0
1	40	SC_CARRIL_2	LinMoving	Min M2	-0.47	-7.41	0.00	-2.07	-0.05	-40.85	1-43	0
1	41	SC_CARRIL_2	LinMoving	Min M2	-0.47	-7.50	0.00	-2.10	-0.04	-33.52	1-44	0
1	42	SC_CARRIL_2	LinMoving	Min M2	-0.48	-7.60	0.00	-2.13	-0.04	-26.00	1-45	0
1	43	SC_CARRIL_2	LinMoving	Min M2	-0.48	-7.71	0.00	-2.17	-0.04	-18.27	1-46	0
1	44	SC_CARRIL_2	LinMoving	Min M2	-0.49	-7.83	0.00	-2.21	-0.04	-10.30	1-47	0
1	45	SC_CARRIL_2	LinMoving	Min M2	-0.49	-7.95	0.00	-2.25	-0.04	-2.07	1-48	0
1	46	SC_CARRIL_2	LinMoving	Min M2	-0.49	-8.09	0.00	-2.30	-0.04	6.47	1-49	0
1	47	SC_CARRIL_2	LinMoving	Min M2	-0.50	-8.25	0.00	-2.35	-0.04	15.37	1-50	0
1	48	SC_CARRIL_2	LinMoving	Min M2	-0.50	-8.42	0.00	-2.41	-0.04	24.67	1-51	0
1	49	SC_CARRIL_2	LinMoving	Min M2	-0.51	-8.61	0.00	-2.48	-0.04	34.45	1-52	0
1	50	SC_CARRIL_2	LinMoving	Min M2	-0.52	-8.82	0.00	-2.55	-0.03	44.78	1-53	0
1	51	SC_CARRIL_2	LinMoving	Min M2	-0.52	-9.05	0.00	-2.63	-0.03	55.78	1-54	0
1	52	SC_CARRIL_2	LinMoving	Min M2	-0.53	-9.32	0.00	-2.72	-0.03	67.56	1-55	0
1	53	SC_CARRIL_2	LinMoving	Min M2	-0.54	-9.62	0.00	-2.83	-0.03	80.30	1-56	0
1	54	SC_CARRIL_2	LinMoving	Min M2	-0.55	-9.97	0.00	-2.95	-0.03	94.21	1-57	0
1	55	SC_CARRIL_2	LinMoving	Min M2	-0.56	-10.38	0.00	-3.09	-0.03	109.57	1-58	0
1	56	SC_CARRIL_2	LinMoving	Min M2	-0.58	-10.85	0.00	-3.25	-0.03	126.74	1-59	0
1	57	SC_CARRIL_2	LinMoving	Min M2	-0.59	-11.42	0.00	-3.44	-0.03	146.25	1-60	0
1	58	SC_CARRIL_2	LinMoving	Min M2	-0.61	-12.10	0.00	-3.68	-0.02	168.81	1-61	0
1	59	SC_CARRIL_2	LinMoving	Min M2	-0.63	-10.91	0.00	-2.95	-0.02	195.44	1-62	0
1	60	SC_CARRIL_2	LinMoving	Min M2	-0.66	-1.73	0.00	1.80	-0.02	222.87	1-63	0
1	61	SC_CARRIL_2	LinMoving	Min M2	-0.70	8.11	0.00	6.93	-0.02	242.10	1-64	0
1	62	SC_CARRIL_2	LinMoving	Min M2	-0.74	18.47	0.00	12.40	-0.02	252.53	1-65	0
1	63	SC_CARRIL_2	LinMoving	Min M2	-0.80	29.54	0.00	18.32	-0.02	253.62	1-66	0
1	64	SC_CARRIL_2	LinMoving	Min M2	-0.87	41.60	0.00	24.92	-0.02	244.51	1-67	0
1	65	SC_CARRIL_2	LinMoving	Min M2	-0.98	55.08	0.00	32.55	-0.02	223.73	1-68	0
1	66	SC_CARRIL_2	LinMoving	Min M2	-1.15	70.60	0.00	41.88	-0.02	188.53	1-69	0
1	67	SC_CARRIL_2	LinMoving	Min M2	-1.41	88.60	0.00	54.19	-0.02	133.48	1-70	0
1	67.5	SC_CARRIL_2	LinMoving	Min M2	-1.60	93.94	0.01	60.29	-0.02	94.44	1-71	0
1	68.5	SC_CARRIL_2	LinMoving	Min M2	0.00	0.00	0.00	0.00	0.00	0.00	1-72	0
1	0	SC_CARRIL_2	LinMoving	Max M3	0.00	0.00	0.00	0.00	0.00	0.00	1-1	0
1	0.5	SC_CARRIL_2	LinMoving	Max M3	0.04	4.99	-0.01	-4.92	0.00	0.04	1-2	0
1	1.5	SC_CARRIL_2	LinMoving	Max M3	-1.46	-104.10	-0.01	-68.17	-0.02	105.57	1-3	0
1	2	SC_CARRIL_2	LinMoving	Max M3	-1.46	-104.11	-0.01	-68.17	-0.01	157.56	1-4	0
1	3	SC_CARRIL_2	LinMoving	Max M3	-1.46	-96.61	-0.01	-64.42	0.00	254.18	1-5	0
1	4	SC_CARRIL_2	LinMoving	Max M3	-1.46	-89.11	-0.01	-60.67	0.01	343.29	1-6	0
1	5	SC_CARRIL_2	LinMoving	Max M3	-1.46	-81.61	-0.01	-56.92	0.03	424.90	1-7	0
1	6	SC_CARRIL_2	LinMoving	Max M3	-1.46	-74.11	-0.01	-53.17	0.04	499.01	1-8	0
1	7	SC_CARRIL_2	LinMoving	Max M3	-1.46	-66.61	-0.01	-49.42	0.05	565.53	1-9	0
1	8	SC_CARRIL_2	LinMoving	Max M3	-1.46	-59.11	-0.01	-45.67	0.06	624.74	1-10	0
1	9	SC_CARRIL_2	LinMoving	Max M3	-1.46	-51.61	-0.01	-41.92	0.08	676.35	1-11	0
1	10	SC_CARRIL_2	LinMoving	Max M3	-1.46	-44.11	-0.01	-38.17	0.09	720.46	1-12	0
1	11	SC_CARRIL_2	LinMoving	Max M3	-1.46	-36.61	-0.01	-34.42	0.10	757.08	1-13	0
1	12	SC_CARRIL_2	LinMoving	Max M3	-1.46	-29.11	-0.01	-30.67	0.11	786.19	1-14	0
1	13	SC_CARRIL_2	LinMoving	Max M3	-1.46	-21.61	-0.01	-26.92	0.13	807.80	1-15	0
1	14	SC_CARRIL_2	LinMoving	Max M3	-1.46	-14.11	-0.01	-23.17	0.14	821.92	1-16	0
1	15	SC_CARRIL_2	LinMoving	Max M3	-1.46	-6.61	-0.01	-19.42	0.15	828.53	1-17	0
1	16	SC_CARRIL_2	LinMoving	Max M3	-1.46	0.89	-0.01	-15.67	0.16	827.64	1-18	0

ESTRUCTURA E1. ESFUERZOS EN TABLERO PARA TODOS LOS CASOS E HIPOTESIS DE CARGA

Frame	Station	OutputCase	CaseType	StepType	P	V2	V3	T	M2	M3	FrameElem	ElemStation
Text	m	Text	Text	Text	KN	KN	KN	KN-m	KN-m	KN-m	Text	m
1	17	SC_CARRIL_2	LinMoving	Max M3	-1.46	8.39	-0.01	-11.92	0.18	819.25	1-19	0
1	18	SC_CARRIL_2	LinMoving	Max M3	-1.46	15.89	-0.01	-8.17	0.19	803.37	1-20	0
1	19	SC_CARRIL_2	LinMoving	Max M3	-1.46	23.39	-0.01	-4.42	0.20	779.98	1-21	0
1	20	SC_CARRIL_2	LinMoving	Max M3	-1.46	30.89	-0.01	-0.67	0.21	749.09	1-22	0
1	21	SC_CARRIL_2	LinMoving	Max M3	-1.46	38.39	-0.01	3.08	0.23	710.71	1-23	0
1	22	SC_CARRIL_2	LinMoving	Max M3	-1.46	45.89	-0.01	6.82	0.24	664.82	1-24	0
1	23	SC_CARRIL_2	LinMoving	Max M3	-1.46	53.39	-0.01	10.57	0.25	611.43	1-25	0
1	24	SC_CARRIL_2	LinMoving	Max M3	-1.46	60.89	-0.01	14.32	0.26	550.54	1-26	0
1	25	SC_CARRIL_2	LinMoving	Max M3	-1.46	68.39	-0.01	18.07	0.28	482.16	1-27	0
1	26	SC_CARRIL_2	LinMoving	Max M3	-1.46	75.89	-0.01	21.82	0.29	406.27	1-28	0
1	27	SC_CARRIL_2	LinMoving	Max M3	-1.46	83.38	-0.01	25.56	0.30	322.89	1-29	0
1	28	SC_CARRIL_2	LinMoving	Max M3	-1.07	81.50	-0.01	25.81	0.33	233.70	1-30	0
1	29	SC_CARRIL_2	LinMoving	Max M3	-0.56	62.51	-0.01	20.01	0.30	158.15	1-31	0
1	30	SC_CARRIL_2	LinMoving	Max M3	-0.30	46.06	-0.01	14.88	0.25	100.32	1-32	0
1	31	SC_CARRIL_2	LinMoving	Max M3	-0.16	31.92	-0.01	10.34	0.20	57.78	1-33	0
1	32	SC_CARRIL_2	LinMoving	Max M3	-0.08	23.52	0.00	8.21	0.15	28.38	1-34	0
1	33	SC_CARRIL_2	LinMoving	Max M3	-0.04	13.11	0.00	4.67	0.09	10.21	1-35	0
1	33.75	SC_CARRIL_2	LinMoving	Max M3	-0.02	4.50	0.00	1.38	0.04	2.24	1-36	0
1	34.5	SC_CARRIL_2	LinMoving	Max M3	-0.02	0.04	0.00	-0.03	-0.01	0.42	1-37	0
1	35.25	SC_CARRIL_2	LinMoving	Max M3	-0.02	-4.50	0.00	-1.38	0.04	2.24	1-38	0
1	36	SC_CARRIL_2	LinMoving	Max M3	-0.04	-13.11	0.00	-4.67	0.09	10.21	1-39	0
1	37	SC_CARRIL_2	LinMoving	Max M3	-0.08	-19.77	0.00	-6.33	0.15	28.38	1-40	0
1	38	SC_CARRIL_2	LinMoving	Max M3	-0.16	-31.92	0.01	-10.34	0.20	57.78	1-41	0
1	39	SC_CARRIL_2	LinMoving	Max M3	-0.30	-46.06	0.01	-14.88	0.25	100.32	1-42	0
1	40	SC_CARRIL_2	LinMoving	Max M3	-0.56	-62.51	0.01	-20.01	0.30	158.15	1-43	0
1	41	SC_CARRIL_2	LinMoving	Max M3	-1.07	-81.50	0.01	-25.81	0.33	233.70	1-44	0
1	42	SC_CARRIL_2	LinMoving	Max M3	-1.46	-83.38	0.01	-25.56	0.30	322.89	1-45	0
1	43	SC_CARRIL_2	LinMoving	Max M3	-1.46	-75.89	0.01	-21.82	0.29	406.27	1-46	0
1	44	SC_CARRIL_2	LinMoving	Max M3	-1.46	-68.39	0.01	-18.07	0.28	482.16	1-47	0
1	45	SC_CARRIL_2	LinMoving	Max M3	-1.46	-60.89	0.01	-14.32	0.26	550.54	1-48	0
1	46	SC_CARRIL_2	LinMoving	Max M3	-1.46	-53.39	0.01	-10.57	0.25	611.43	1-49	0
1	47	SC_CARRIL_2	LinMoving	Max M3	-1.46	-45.89	0.01	-6.82	0.24	664.82	1-50	0
1	48	SC_CARRIL_2	LinMoving	Max M3	-1.46	-38.39	0.01	-3.08	0.23	710.71	1-51	0
1	49	SC_CARRIL_2	LinMoving	Max M3	-1.46	-30.89	0.01	0.67	0.21	749.09	1-52	0
1	50	SC_CARRIL_2	LinMoving	Max M3	-1.46	-23.39	0.01	4.42	0.20	779.98	1-53	0
1	51	SC_CARRIL_2	LinMoving	Max M3	-1.46	-15.89	0.01	8.17	0.19	803.37	1-54	0
1	52	SC_CARRIL_2	LinMoving	Max M3	-1.46	-8.39	0.01	11.92	0.18	819.25	1-55	0
1	53	SC_CARRIL_2	LinMoving	Max M3	-1.46	-0.89	0.01	15.67	0.16	827.64	1-56	0
1	54	SC_CARRIL_2	LinMoving	Max M3	-1.46	6.61	0.01	19.42	0.15	828.53	1-57	0
1	55	SC_CARRIL_2	LinMoving	Max M3	-1.46	14.11	0.01	23.17	0.14	821.92	1-58	0
1	56	SC_CARRIL_2	LinMoving	Max M3	-1.46	21.61	0.01	26.92	0.13	807.80	1-59	0
1	57	SC_CARRIL_2	LinMoving	Max M3	-1.46	29.11	0.01	30.67	0.11	786.19	1-60	0
1	58	SC_CARRIL_2	LinMoving	Max M3	-1.46	36.61	0.01	34.42	0.10	757.08	1-61	0
1	59	SC_CARRIL_2	LinMoving	Max M3	-1.46	44.11	0.01	38.17	0.09	720.46	1-62	0
1	60	SC_CARRIL_2	LinMoving	Max M3	-1.46	51.61	0.01	41.92	0.08	676.35	1-63	0
1	61	SC_CARRIL_2	LinMoving	Max M3	-1.46	59.11	0.01	45.67	0.06	624.74	1-64	0
1	62	SC_CARRIL_2	LinMoving	Max M3	-1.46	66.61	0.01	49.42	0.05	565.63	1-65	0
1	63	SC_CARRIL_2	LinMoving	Max M3	-1.46	74.11	0.01	53.17	0.04	499.01	1-66	0
1	64	SC_CARRIL_2	LinMoving	Max M3	-1.46	81.61	0.01	56.92	0.03	424.90	1-67	0
1	65	SC_CARRIL_2	LinMoving	Max M3	-1.46	89.11	0.01	60.67	0.01	343.29	1-68	0
1	66	SC_CARRIL_2	LinMoving	Max M3	-1.46	96.61	0.01	64.42	0.00	254.18	1-69	0
1	67	SC_CARRIL_2	LinMoving	Max M3	-1.46	104.11	0.01	68.17	-0.01	157.62	1-70	0
1	67.5	SC_CARRIL_2	LinMoving	Max M3	-1.46	104.10	0.01	68.17	-0.02	105.67	1-71	0
1	68.5	SC_CARRIL_2	LinMoving	Max M3	0.00	0.00	0.00	0.00	0.00	0.00	1-72	0
1	0	SC_CARRIL_2	LinMoving	Min M3	0.00	0.00	0.00	0.00	0.00	0.00	1-1	0
1	0.5	SC_CARRIL_2	LinMoving	Min M3	-1.86	-100.73	-0.02	-76.04	-0.04	-3.47	1-2	0
1	1.5	SC_CARRIL_2	LinMoving	Min M3	-0.35	15.86	-0.01	-9.05	0.00	-17.12	1-3	0
1	2	SC_CARRIL_2	LinMoving	Min M3	-0.35	15.86	-0.01	-9.05	0.01	-25.07	1-4	0
1	3	SC_CARRIL_2	LinMoving	Min M3	-0.35	15.86	-0.01	-9.04	0.02	-40.93	1-5	0
1	4	SC_CARRIL_2	LinMoving	Min M3	-0.35	15.86	-0.01	-9.04	0.03	-56.79	1-6	0
1	5	SC_CARRIL_2	LinMoving	Min M3	-0.35	15.86	-0.01	-9.04	0.04	-72.65	1-7	0
1	6	SC_CARRIL_2	LinMoving	Min M3	-0.35	15.86	-0.01	-9.04	0.06	-88.51	1-8	0
1	7	SC_CARRIL_2	LinMoving	Min M3	-0.35	15.86	-0.01	-9.04	0.07	-104.38	1-9	0
1	8	SC_CARRIL_2	LinMoving	Min M3	-0.35	15.86	-0.01	-9.04	0.08	-120.24	1-10	0
1	9	SC_CARRIL_2	LinMoving	Min M3	-0.35	15.86	-0.01	-9.04	0.09	-136.10	1-11	0
1	10	SC_CARRIL_2	LinMoving	Min M3	-0.35	15.86	-0.01	-9.04	0.10	-151.96	1-12	0
1	11	SC_CARRIL_2	LinMoving	Min M3	-0.35	15.86	-0.01	-9.04	0.11	-167.82	1-13	0
1	12	SC_CARRIL_2	LinMoving	Min M3	-0.35	15.86	-0.01	-9.04	0.13	-183.69	1-14	0
1	13	SC_CARRIL_2	LinMoving	Min M3	-0.35	15.86	-0.01	-9.04	0.14	-199.55	1-15	0
1	14	SC_CARRIL_2	LinMoving	Min M3	-0.35	15.86	-0.01	-9.04	0.15	-215.41	1-16	0
1	15	SC_CARRIL_2	LinMoving	Min M3	-0.35	15.86	-0.01	-9.04	0.16	-231.27	1-17	0
1	16	SC_CARRIL_2	LinMoving	Min M3	-0.35	15.86	-0.01	-9.04	0.17	-247.13	1-18	0
1	17	SC_CARRIL_2	LinMoving	Min M3	-0.35	15.86	-0.01	-9.04	0.18	-263.00	1-19	0
1	18	SC_CARRIL_2	LinMoving	Min M3	-0.35	15.86	-0.01	-9.04	0.20	-278.86	1-20	0
1	19	SC_CARRIL_2	LinMoving	Min M3	-0.35	15.86	-0.01	-9.04	0.21	-294.72	1-21	0
1	20	SC_CARRIL_2	LinMoving	Min M3	-0.35	15.86	-0.01	-9.04	0.22	-310.58	1-22	0
1	21	SC_CARRIL_2	LinMoving	Min M3	-0.35	15.86	-0.01	-9.04	0.23	-326.44	1-23	0
1	22	SC_CARRIL_2	LinMoving	Min M3	-0.35	15.86	-0.01	-9.04	0.24	-342.31	1-24	0
1	23	SC_CARRIL_2	LinMoving	Min M3	-0.35	15.86	-0.01	-9.04	0.25	-358.17	1-25	0
1	24	SC_CARRIL_2	LinMoving	Min M3	-0.35	15.86	-0.01	-9.04	0.27	-374.03	1-26	0
1	25	SC_CARRIL_2	LinMoving	Min M3	-0.35	15.86	-0.01	-9.04	0.28	-389.89	1-27	0

ESTRUCTURA E1. ESFUERZOS EN TABLERO PARA TODOS LOS CASOS E HIPOTESIS DE CARGA

Frame	Station	OutputCase	CaseType	StepType	P	V2	V3	T	M2	M3	FrameElem	ElemStation
Text	m	Text	Text	Text	KN	KN	KN	KN-m	KN-m	KN-m	Text	m
1	26	SC_CARRIL_2	LinMoving	Min M3	-0.35	15.86	-0.01	-9.03	0.29	-405.76	1-28	0
1	27	SC_CARRIL_2	LinMoving	Min M3	-0.36	15.87	-0.01	-9.02	0.30	-421.62	1-29	0
1	28	SC_CARRIL_2	LinMoving	Min M3	-0.75	25.25	-0.01	-5.52	0.29	-439.18	1-30	0
1	29	SC_CARRIL_2	LinMoving	Min M3	-1.25	51.74	-0.01	4.02	0.35	-477.88	1-31	0
1	30	SC_CARRIL_2	LinMoving	Min M3	-1.51	75.69	-0.02	12.91	0.42	-541.80	1-32	0
1	31	SC_CARRIL_2	LinMoving	Min M3	-1.66	97.33	-0.02	21.19	0.50	-628.51	1-33	0
1	32	SC_CARRIL_2	LinMoving	Min M3	-1.74	116.98	-0.02	28.95	0.58	-735.86	1-34	0
1	33	SC_CARRIL_2	LinMoving	Min M3	-1.78	134.89	-0.02	36.24	0.66	-861.87	1-35	0
1	33.75	SC_CARRIL_2	LinMoving	Min M3	-1.79	147.25	-0.02	41.41	0.72	-967.71	1-36	0
1	34.5	SC_CARRIL_2	LinMoving	Min M3	-1.79	-159.29	0.02	-46.50	0.79	-1083.45	1-37	0
1	35.25	SC_CARRIL_2	LinMoving	Min M3	-1.79	-147.25	0.02	-41.41	0.72	-967.71	1-38	0
1	36	SC_CARRIL_2	LinMoving	Min M3	-1.78	-134.89	0.02	-36.24	0.66	-861.94	1-39	0
1	37	SC_CARRIL_2	LinMoving	Min M3	-1.74	-116.98	0.02	-28.95	0.58	-735.86	1-40	0
1	38	SC_CARRIL_2	LinMoving	Min M3	-1.66	-97.33	0.02	-21.19	0.50	-628.51	1-41	0
1	39	SC_CARRIL_2	LinMoving	Min M3	-1.51	-75.69	0.02	-12.91	0.42	-541.80	1-42	0
1	40	SC_CARRIL_2	LinMoving	Min M3	-1.25	-51.74	0.01	-4.02	0.35	-477.88	1-43	0
1	41	SC_CARRIL_2	LinMoving	Min M3	-0.75	-25.25	0.01	5.52	0.29	-439.18	1-44	0
1	42	SC_CARRIL_2	LinMoving	Min M3	-0.36	-15.87	0.01	9.02	0.30	-421.62	1-45	0
1	43	SC_CARRIL_2	LinMoving	Min M3	-0.35	-15.86	0.01	9.03	0.29	-405.76	1-46	0
1	44	SC_CARRIL_2	LinMoving	Min M3	-0.35	-15.86	0.01	9.04	0.28	-389.89	1-47	0
1	45	SC_CARRIL_2	LinMoving	Min M3	-0.35	-15.86	0.01	9.04	0.27	-374.03	1-48	0
1	46	SC_CARRIL_2	LinMoving	Min M3	-0.35	-15.86	0.01	9.04	0.26	-358.17	1-49	0
1	47	SC_CARRIL_2	LinMoving	Min M3	-0.35	-15.86	0.01	9.04	0.24	-342.31	1-50	0
1	48	SC_CARRIL_2	LinMoving	Min M3	-0.35	-15.86	0.01	9.04	0.23	-326.44	1-51	0
1	49	SC_CARRIL_2	LinMoving	Min M3	-0.35	-15.86	0.01	9.04	0.22	-310.58	1-52	0
1	50	SC_CARRIL_2	LinMoving	Min M3	-0.35	-15.86	0.01	9.04	0.21	-294.72	1-53	0
1	51	SC_CARRIL_2	LinMoving	Min M3	-0.35	-15.86	0.01	9.04	0.20	-278.86	1-54	0
1	52	SC_CARRIL_2	LinMoving	Min M3	-0.35	-15.86	0.01	9.04	0.18	-263.00	1-55	0
1	53	SC_CARRIL_2	LinMoving	Min M3	-0.35	-15.86	0.01	9.04	0.17	-247.13	1-56	0
1	54	SC_CARRIL_2	LinMoving	Min M3	-0.35	-15.86	0.01	9.04	0.16	-231.27	1-57	0
1	55	SC_CARRIL_2	LinMoving	Min M3	-0.35	-15.86	0.01	9.04	0.15	-215.41	1-58	0
1	56	SC_CARRIL_2	LinMoving	Min M3	-0.35	-15.86	0.01	9.04	0.14	-199.55	1-59	0
1	57	SC_CARRIL_2	LinMoving	Min M3	-0.35	-15.86	0.01	9.04	0.13	-183.69	1-60	0
1	58	SC_CARRIL_2	LinMoving	Min M3	-0.35	-15.86	0.01	9.04	0.11	-167.82	1-61	0
1	59	SC_CARRIL_2	LinMoving	Min M3	-0.35	-15.86	0.01	9.04	0.10	-151.96	1-62	0
1	60	SC_CARRIL_2	LinMoving	Min M3	-0.35	-15.86	0.01	9.04	0.09	-136.10	1-63	0
1	61	SC_CARRIL_2	LinMoving	Min M3	-0.35	-15.86	0.01	9.04	0.08	-120.24	1-64	0
1	62	SC_CARRIL_2	LinMoving	Min M3	-0.35	-15.86	0.01	9.04	0.07	-104.38	1-65	0
1	63	SC_CARRIL_2	LinMoving	Min M3	-0.35	-15.86	0.01	9.04	0.06	-88.51	1-66	0
1	64	SC_CARRIL_2	LinMoving	Min M3	-0.35	-15.86	0.01	9.04	0.04	-72.65	1-67	0
1	65	SC_CARRIL_2	LinMoving	Min M3	-0.35	-15.86	0.01	9.04	0.03	-56.79	1-68	0
1	66	SC_CARRIL_2	LinMoving	Min M3	-0.35	-15.86	0.01	9.04	0.02	-40.93	1-69	0
1	67	SC_CARRIL_2	LinMoving	Min M3	-0.35	-15.86	0.01	9.05	0.01	-25.05	1-70	0
1	67.5	SC_CARRIL_2	LinMoving	Min M3	-0.35	-15.86	0.01	9.05	0.00	-17.10	1-71	0
1	68.5	SC_CARRIL_2	LinMoving	Min M3	0.00	-3.75	0.00	-1.87	0.00	-1.87	1-72	0
1	0	VP_CARRIL_2	LinMoving	Max P	0.00	0.00	0.00	0.00	0.00	0.00	1-1	0
1	0.5	VP_CARRIL_2	LinMoving	Max P	0.31	23.34	-0.04	-24.11	-0.01	0.27	1-2	0
1	1.5	VP_CARRIL_2	LinMoving	Max P	0.31	23.34	-0.04	-24.11	0.03	-23.05	1-3	0
1	2	VP_CARRIL_2	LinMoving	Max P	0.31	23.34	-0.04	-24.11	0.05	-34.70	1-4	0
1	3	VP_CARRIL_2	LinMoving	Max P	0.31	23.34	-0.04	-24.11	0.08	-58.04	1-5	0
1	4	VP_CARRIL_2	LinMoving	Max P	0.31	23.34	-0.04	-24.11	0.12	-81.37	1-6	0
1	5	VP_CARRIL_2	LinMoving	Max P	0.31	23.34	-0.04	-24.11	0.16	-104.71	1-7	0
1	6	VP_CARRIL_2	LinMoving	Max P	0.31	23.34	-0.04	-24.11	0.20	-128.04	1-8	0
1	7	VP_CARRIL_2	LinMoving	Max P	0.31	23.34	-0.04	-24.11	0.24	-151.37	1-9	0
1	8	VP_CARRIL_2	LinMoving	Max P	0.31	23.34	-0.04	-24.11	0.28	-174.71	1-10	0
1	9	VP_CARRIL_2	LinMoving	Max P	0.31	23.34	-0.04	-24.11	0.32	-198.04	1-11	0
1	10	VP_CARRIL_2	LinMoving	Max P	0.31	23.34	-0.04	-24.11	0.36	-221.38	1-12	0
1	11	VP_CARRIL_2	LinMoving	Max P	0.31	23.34	-0.04	-24.11	0.40	-244.71	1-13	0
1	12	VP_CARRIL_2	LinMoving	Max P	0.31	23.34	-0.04	-24.11	0.44	-268.05	1-14	0
1	13	VP_CARRIL_2	LinMoving	Max P	0.31	23.34	-0.04	-24.11	0.48	-291.38	1-15	0
1	14	VP_CARRIL_2	LinMoving	Max P	0.31	23.34	-0.04	-24.11	0.52	-314.72	1-16	0
1	15	VP_CARRIL_2	LinMoving	Max P	0.31	23.34	-0.04	-24.11	0.56	-338.05	1-17	0
1	16	VP_CARRIL_2	LinMoving	Max P	0.31	23.34	-0.04	-24.11	0.60	-361.38	1-18	0
1	17	VP_CARRIL_2	LinMoving	Max P	0.31	23.34	-0.04	-24.11	0.63	-384.72	1-19	0
1	18	VP_CARRIL_2	LinMoving	Max P	0.31	23.34	-0.04	-24.11	0.67	-408.05	1-20	0
1	19	VP_CARRIL_2	LinMoving	Max P	0.31	23.34	-0.04	-24.11	0.71	-431.39	1-21	0
1	20	VP_CARRIL_2	LinMoving	Max P	0.31	23.34	-0.04	-24.11	0.75	-454.72	1-22	0
1	21	VP_CARRIL_2	LinMoving	Max P	0.31	23.34	-0.04	-24.11	0.79	-478.06	1-23	0
1	22	VP_CARRIL_2	LinMoving	Max P	0.31	23.34	-0.04	-24.11	0.83	-501.39	1-24	0
1	23	VP_CARRIL_2	LinMoving	Max P	0.31	23.34	-0.04	-24.11	0.87	-524.73	1-25	0
1	24	VP_CARRIL_2	LinMoving	Max P	0.31	23.34	-0.04	-24.11	0.91	-548.06	1-26	0
1	25	VP_CARRIL_2	LinMoving	Max P	0.31	23.34	-0.04	-24.11	0.95	-571.40	1-27	0
1	26	VP_CARRIL_2	LinMoving	Max P	0.31	23.34	-0.04	-24.11	0.99	-594.73	1-28	0
1	27	VP_CARRIL_2	LinMoving	Max P	0.31	23.34	-0.04	-24.11	1.03	-618.06	1-29	0
1	28	VP_CARRIL_2	LinMoving	Max P	0.31	23.34	-0.04	-24.11	1.07	-641.40	1-30	0
1	29	VP_CARRIL_2	LinMoving	Max P	0.31	23.34	-0.04	-24.11	1.11	-664.73	1-31	0
1	30	VP_CARRIL_2	LinMoving	Max P	0.31	23.34	-0.04	-24.11	1.15	-688.07	1-32	0
1	31	VP_CARRIL_2	LinMoving	Max P	0.31	23.34	-0.04	-24.11	1.18	-711.40	1-33	0
1	32	VP_CARRIL_2	LinMoving	Max P	0.31	23.34	-0.04	-24.11	1.22	-734.74	1-34	0
1	33	VP_CARRIL_2	LinMoving	Max P	0.31	23.34	-0.04	-24.11	1.26	-758.08	1-35	0
1	33.75	VP_CARRIL_2	LinMoving	Max P	0.31	23.34	-0.04	-24.11	1.29	-775.58	1-36	0

ESTRUCTURA E1. ESFUERZOS EN TABLERO PARA TODOS LOS CASOS E HIPOTESIS DE CARGA

Frame	Station	OutputCase	CaseType	StepType	P	V2	V3	T	M2	M3	FrameElem	ElemStation
Text	m	Text	Text	Text	KN	KN	KN	KN-m	KN-m	KN-m	Text	m
1	34.5	VP_CARRIL_2	LinMoving	Max P	0.31	-23.34	0.04	24.11	1.32	-793.09	1-37	0
1	35.25	VP_CARRIL_2	LinMoving	Max P	0.31	-23.34	0.04	24.11	1.29	-775.58	1-38	0
1	36	VP_CARRIL_2	LinMoving	Max P	0.31	-23.34	0.04	24.11	1.26	-758.07	1-39	0
1	37	VP_CARRIL_2	LinMoving	Max P	0.31	-23.34	0.04	24.11	1.22	-734.74	1-40	0
1	38	VP_CARRIL_2	LinMoving	Max P	0.31	-23.34	0.04	24.11	1.18	-711.40	1-41	0
1	39	VP_CARRIL_2	LinMoving	Max P	0.31	-23.34	0.04	24.11	1.15	-688.07	1-42	0
1	40	VP_CARRIL_2	LinMoving	Max P	0.31	-23.34	0.04	24.11	1.11	-664.73	1-43	0
1	41	VP_CARRIL_2	LinMoving	Max P	0.31	-23.34	0.04	24.11	1.07	-641.40	1-44	0
1	42	VP_CARRIL_2	LinMoving	Max P	0.31	-23.34	0.04	24.11	1.03	-618.06	1-45	0
1	43	VP_CARRIL_2	LinMoving	Max P	0.31	-23.34	0.04	24.11	0.99	-594.73	1-46	0
1	44	VP_CARRIL_2	LinMoving	Max P	0.31	-23.34	0.04	24.11	0.95	-571.40	1-47	0
1	45	VP_CARRIL_2	LinMoving	Max P	0.31	-23.34	0.04	24.11	0.91	-548.06	1-48	0
1	46	VP_CARRIL_2	LinMoving	Max P	0.31	-23.34	0.04	24.11	0.87	-524.73	1-49	0
1	47	VP_CARRIL_2	LinMoving	Max P	0.31	-23.34	0.04	24.11	0.83	-501.39	1-50	0
1	48	VP_CARRIL_2	LinMoving	Max P	0.31	-23.34	0.04	24.11	0.79	-478.06	1-51	0
1	49	VP_CARRIL_2	LinMoving	Max P	0.31	-23.34	0.04	24.11	0.75	-454.72	1-52	0
1	50	VP_CARRIL_2	LinMoving	Max P	0.31	-23.34	0.04	24.11	0.71	-431.39	1-53	0
1	51	VP_CARRIL_2	LinMoving	Max P	0.31	-23.34	0.04	24.11	0.67	-408.05	1-54	0
1	52	VP_CARRIL_2	LinMoving	Max P	0.31	-23.34	0.04	24.11	0.63	-384.72	1-55	0
1	53	VP_CARRIL_2	LinMoving	Max P	0.31	-23.34	0.04	24.11	0.60	-361.38	1-56	0
1	54	VP_CARRIL_2	LinMoving	Max P	0.31	-23.34	0.04	24.11	0.56	-338.05	1-57	0
1	55	VP_CARRIL_2	LinMoving	Max P	0.31	-23.34	0.04	24.11	0.52	-314.72	1-58	0
1	56	VP_CARRIL_2	LinMoving	Max P	0.31	-23.34	0.04	24.11	0.48	-291.38	1-59	0
1	57	VP_CARRIL_2	LinMoving	Max P	0.31	-23.34	0.04	24.11	0.44	-268.05	1-60	0
1	58	VP_CARRIL_2	LinMoving	Max P	0.31	-23.34	0.04	24.11	0.40	-244.71	1-61	0
1	59	VP_CARRIL_2	LinMoving	Max P	0.31	-23.34	0.04	24.11	0.36	-221.38	1-62	0
1	60	VP_CARRIL_2	LinMoving	Max P	0.31	-23.34	0.04	24.11	0.32	-198.04	1-63	0
1	61	VP_CARRIL_2	LinMoving	Max P	0.31	-23.34	0.04	24.11	0.28	-174.71	1-64	0
1	62	VP_CARRIL_2	LinMoving	Max P	0.31	-23.34	0.04	24.11	0.24	-151.37	1-65	0
1	63	VP_CARRIL_2	LinMoving	Max P	0.31	-23.34	0.04	24.11	0.20	-128.04	1-66	0
1	64	VP_CARRIL_2	LinMoving	Max P	0.31	-23.34	0.04	24.11	0.16	-104.71	1-67	0
1	65	VP_CARRIL_2	LinMoving	Max P	0.31	-23.34	0.04	24.11	0.12	-81.37	1-68	0
1	66	VP_CARRIL_2	LinMoving	Max P	0.31	-23.34	0.04	24.11	0.08	-58.04	1-69	0
1	67	VP_CARRIL_2	LinMoving	Max P	0.31	-23.34	0.04	24.11	0.05	-34.71	1-70	0
1	67.5	VP_CARRIL_2	LinMoving	Max P	0.31	-23.34	0.04	24.11	0.03	-23.07	1-71	0
1	68.5	VP_CARRIL_2	LinMoving	Max P	0.00	0.00	0.00	0.00	0.00	0.00	1-72	0
1	0	VP_CARRIL_2	LinMoving	Min P	0.00	0.00	0.00	0.00	0.00	0.00	1-1	0
1	0.5	VP_CARRIL_2	LinMoving	Min P	-3.48	-240.26	-0.01	-142.49	-0.06	-3.00	1-2	0
1	1.5	VP_CARRIL_2	LinMoving	Min P	-3.48	-240.26	-0.01	-142.49	-0.05	237.02	1-3	0
1	2	VP_CARRIL_2	LinMoving	Min P	-3.48	-240.26	-0.01	-142.49	-0.04	357.02	1-4	0
1	3	VP_CARRIL_2	LinMoving	Min P	-3.48	-240.26	-0.01	-142.49	-0.03	597.28	1-5	0
1	4	VP_CARRIL_2	LinMoving	Min P	-3.48	-240.26	-0.01	-142.49	-0.02	837.54	1-6	0
1	5	VP_CARRIL_2	LinMoving	Min P	-3.48	-240.26	-0.01	-142.49	-0.01	1077.80	1-7	0
1	6	VP_CARRIL_2	LinMoving	Min P	-3.48	-240.26	-0.01	-142.49	-0.01	1318.06	1-8	0
1	7	VP_CARRIL_2	LinMoving	Min P	-3.48	-240.26	-0.01	-142.49	0.00	1558.32	1-9	0
1	8	VP_CARRIL_2	LinMoving	Min P	-3.48	-240.26	-0.01	-142.49	0.01	1798.58	1-10	0
1	9	VP_CARRIL_2	LinMoving	Min P	-3.48	-240.26	-0.01	-142.49	0.02	2038.84	1-11	0
1	10	VP_CARRIL_2	LinMoving	Min P	-3.48	-240.26	-0.01	-142.49	0.03	2279.10	1-12	0
1	11	VP_CARRIL_2	LinMoving	Min P	-3.48	-240.26	-0.01	-142.49	0.04	2519.37	1-13	0
1	12	VP_CARRIL_2	LinMoving	Min P	-3.48	-40.26	-0.01	-42.49	0.05	2559.76	1-14	0
1	13	VP_CARRIL_2	LinMoving	Min P	-3.48	119.73	-0.01	37.51	0.06	2440.13	1-15	0
1	14	VP_CARRIL_2	LinMoving	Min P	-3.48	159.74	-0.01	57.51	0.07	2280.42	1-16	0
1	15	VP_CARRIL_2	LinMoving	Min P	-3.48	159.74	-0.01	57.51	0.08	2120.68	1-17	0
1	16	VP_CARRIL_2	LinMoving	Min P	-3.48	159.74	-0.01	57.51	0.09	1960.94	1-18	0
1	17	VP_CARRIL_2	LinMoving	Min P	-3.48	159.74	-0.01	57.51	0.10	1801.20	1-19	0
1	18	VP_CARRIL_2	LinMoving	Min P	-3.48	159.74	-0.01	57.51	0.11	1641.46	1-20	0
1	19	VP_CARRIL_2	LinMoving	Min P	-3.48	159.74	-0.01	57.51	0.12	1481.72	1-21	0
1	20	VP_CARRIL_2	LinMoving	Min P	-3.48	159.74	-0.01	57.51	0.13	1321.98	1-22	0
1	21	VP_CARRIL_2	LinMoving	Min P	-3.48	159.74	-0.01	57.51	0.14	1162.24	1-23	0
1	22	VP_CARRIL_2	LinMoving	Min P	-3.48	159.74	-0.01	57.51	0.15	1002.50	1-24	0
1	23	VP_CARRIL_2	LinMoving	Min P	-3.48	159.74	-0.01	57.51	0.16	842.76	1-25	0
1	24	VP_CARRIL_2	LinMoving	Min P	-3.48	159.74	-0.01	57.51	0.17	683.02	1-26	0
1	25	VP_CARRIL_2	LinMoving	Min P	-3.48	159.74	-0.01	57.51	0.18	523.29	1-27	0
1	26	VP_CARRIL_2	LinMoving	Min P	-3.48	159.74	-0.01	57.51	0.19	363.55	1-28	0
1	27	VP_CARRIL_2	LinMoving	Min P	-3.48	159.74	-0.01	57.51	0.20	203.81	1-29	0
1	28	VP_CARRIL_2	LinMoving	Min P	-3.48	159.74	-0.01	57.51	0.21	44.07	1-30	0
1	29	VP_CARRIL_2	LinMoving	Min P	-3.48	159.74	-0.01	57.51	0.22	-115.67	1-31	0
1	30	VP_CARRIL_2	LinMoving	Min P	-3.48	159.74	-0.01	57.51	0.23	-275.41	1-32	0
1	31	VP_CARRIL_2	LinMoving	Min P	-3.48	159.74	-0.01	57.51	0.24	-435.15	1-33	0
1	32	VP_CARRIL_2	LinMoving	Min P	-3.48	159.74	-0.01	57.51	0.25	-594.89	1-34	0
1	33	VP_CARRIL_2	LinMoving	Min P	-3.48	159.74	-0.01	57.51	0.26	-754.50	1-35	0
1	33.75	VP_CARRIL_2	LinMoving	Min P	-3.48	159.74	-0.01	57.51	0.26	-874.30	1-36	0
1	34.5	VP_CARRIL_2	LinMoving	Min P	-3.48	-159.74	0.01	-57.51	0.27	-994.11	1-37	0
1	35.25	VP_CARRIL_2	LinMoving	Min P	-3.48	-159.74	0.01	-57.51	0.26	-874.30	1-38	0
1	36	VP_CARRIL_2	LinMoving	Min P	-3.48	-159.74	0.01	-57.51	0.25	-754.63	1-39	0
1	37	VP_CARRIL_2	LinMoving	Min P	-3.48	-159.74	0.01	-57.51	0.25	-594.89	1-40	0
1	38	VP_CARRIL_2	LinMoving	Min P	-3.48	-159.74	0.01	-57.51	0.24	-435.15	1-41	0
1	39	VP_CARRIL_2	LinMoving	Min P	-3.48	-159.74	0.01	-57.51	0.23	-275.41	1-42	0
1	40	VP_CARRIL_2	LinMoving	Min P	-3.48	-159.74	0.01	-57.51	0.22	-115.67	1-43	0
1	41	VP_CARRIL_2	LinMoving	Min P	-3.48	-159.74	0.01	-57.51	0.21	44.07	1-44	0
1	42	VP_CARRIL_2	LinMoving	Min P	-3.48	-159.74	0.01	-57.51	0.20	203.81	1-45	0

ESTRUCTURA E1. ESFUERZOS EN TABLERO PARA TODOS LOS CASOS E HIPOTESIS DE CARGA

Frame	Station	OutputCase	CaseType	StepType	P	V2	V3	T	M2	M3	FrameElem	ElemStation
Text	m	Text	Text	Text	KN	KN	KN	KN-m	KN-m	KN-m	Text	m
1	43	VP_CARRIL_2	LinMoving	Min P	-3.48	-159.74	0.01	-57.51	0.19	363.55	1-46	0
1	44	VP_CARRIL_2	LinMoving	Min P	-3.48	-159.74	0.01	-57.51	0.18	523.29	1-47	0
1	45	VP_CARRIL_2	LinMoving	Min P	-3.48	-159.74	0.01	-57.51	0.17	683.03	1-48	0
1	46	VP_CARRIL_2	LinMoving	Min P	-3.48	-159.74	0.01	-57.51	0.16	842.76	1-49	0
1	47	VP_CARRIL_2	LinMoving	Min P	-3.48	-159.74	0.01	-57.51	0.15	1002.50	1-50	0
1	48	VP_CARRIL_2	LinMoving	Min P	-3.48	-159.74	0.01	-57.51	0.14	1162.24	1-51	0
1	49	VP_CARRIL_2	LinMoving	Min P	-3.48	-159.74	0.01	-57.51	0.13	1321.98	1-52	0
1	50	VP_CARRIL_2	LinMoving	Min P	-3.48	-159.74	0.01	-57.51	0.12	1481.72	1-53	0
1	51	VP_CARRIL_2	LinMoving	Min P	-3.48	-159.74	0.01	-57.51	0.11	1641.46	1-54	0
1	52	VP_CARRIL_2	LinMoving	Min P	-3.48	-159.74	0.01	-57.51	0.10	1801.20	1-55	0
1	53	VP_CARRIL_2	LinMoving	Min P	-3.48	-159.74	0.01	-57.51	0.09	1960.94	1-56	0
1	54	VP_CARRIL_2	LinMoving	Min P	-3.48	-159.74	0.01	-57.51	0.08	2120.68	1-57	0
1	55	VP_CARRIL_2	LinMoving	Min P	-3.48	-159.74	0.01	-57.51	0.07	2280.42	1-58	0
1	56	VP_CARRIL_2	LinMoving	Min P	-3.48	-119.73	0.01	-37.51	0.06	2440.13	1-59	0
1	57	VP_CARRIL_2	LinMoving	Min P	-3.48	40.26	0.01	42.49	0.05	2559.76	1-60	0
1	58	VP_CARRIL_2	LinMoving	Min P	-3.48	240.26	0.01	142.49	0.04	2519.37	1-61	0
1	59	VP_CARRIL_2	LinMoving	Min P	-3.48	240.26	0.01	142.49	0.03	2279.10	1-62	0
1	60	VP_CARRIL_2	LinMoving	Min P	-3.48	240.26	0.01	142.49	0.02	2038.84	1-63	0
1	61	VP_CARRIL_2	LinMoving	Min P	-3.48	240.26	0.01	142.49	0.01	1798.58	1-64	0
1	62	VP_CARRIL_2	LinMoving	Min P	-3.48	240.26	0.01	142.49	0.00	1558.32	1-65	0
1	63	VP_CARRIL_2	LinMoving	Min P	-3.48	240.26	0.01	142.49	-0.01	1318.06	1-66	0
1	64	VP_CARRIL_2	LinMoving	Min P	-3.48	240.26	0.01	142.49	-0.01	1077.80	1-67	0
1	65	VP_CARRIL_2	LinMoving	Min P	-3.48	240.26	0.01	142.49	-0.02	837.54	1-68	0
1	66	VP_CARRIL_2	LinMoving	Min P	-3.48	240.26	0.01	142.49	-0.03	597.28	1-69	0
1	67	VP_CARRIL_2	LinMoving	Min P	-3.48	240.26	0.01	142.49	-0.04	357.15	1-70	0
1	67.5	VP_CARRIL_2	LinMoving	Min P	-3.48	240.26	0.01	142.49	-0.05	237.26	1-71	0
1	68.5	VP_CARRIL_2	LinMoving	Min P	0.00	0.00	0.00	0.00	0.00	0.00	1-72	0
1	0	VP_CARRIL_2	LinMoving	Max V2	0.00	0.00	0.00	0.00	0.00	0.00	1-1	0
1	0.5	VP_CARRIL_2	LinMoving	Max V2	-0.25	38.42	-0.02	-16.69	-0.01	-0.21	1-2	0
1	1.5	VP_CARRIL_2	LinMoving	Max V2	-0.25	38.42	-0.02	-16.69	0.01	-38.65	1-3	0
1	2	VP_CARRIL_2	LinMoving	Max V2	-0.25	38.42	-0.02	-16.69	0.02	-57.86	1-4	0
1	3	VP_CARRIL_2	LinMoving	Max V2	-0.25	38.42	-0.02	-16.69	0.05	-96.28	1-5	0
1	4	VP_CARRIL_2	LinMoving	Max V2	-0.25	38.42	-0.02	-16.69	0.07	-134.69	1-6	0
1	5	VP_CARRIL_2	LinMoving	Max V2	-2.34	42.60	0.00	16.22	-0.09	966.40	1-7	0
1	6	VP_CARRIL_2	LinMoving	Max V2	-2.61	57.21	0.00	21.26	-0.09	1243.17	1-8	0
1	7	VP_CARRIL_2	LinMoving	Max V2	-2.84	71.76	0.00	26.29	-0.08	1491.13	1-9	0
1	8	VP_CARRIL_2	LinMoving	Max V2	-3.04	86.24	0.00	31.33	-0.06	1710.58	1-10	0
1	9	VP_CARRIL_2	LinMoving	Max V2	-3.19	100.63	0.00	36.36	-0.04	1901.87	1-11	0
1	10	VP_CARRIL_2	LinMoving	Max V2	-3.31	114.91	0.00	41.40	-0.02	2065.41	1-12	0
1	11	VP_CARRIL_2	LinMoving	Max V2	-3.40	129.08	-0.01	46.44	0.00	2201.68	1-13	0
1	12	VP_CARRIL_2	LinMoving	Max V2	-3.45	143.11	-0.01	51.47	0.03	2311.20	1-14	0
1	13	VP_CARRIL_2	LinMoving	Max V2	-3.48	156.98	-0.01	56.51	0.06	2394.59	1-15	0
1	14	VP_CARRIL_2	LinMoving	Max V2	-3.47	170.70	-0.01	61.54	0.09	2452.50	1-16	0
1	15	VP_CARRIL_2	LinMoving	Max V2	-3.44	184.22	-0.01	66.58	0.13	2485.65	1-17	0
1	16	VP_CARRIL_2	LinMoving	Max V2	-3.39	197.56	-0.01	71.61	0.17	2494.83	1-18	0
1	17	VP_CARRIL_2	LinMoving	Max V2	-3.31	210.67	-0.02	76.65	0.21	2480.88	1-19	0
1	18	VP_CARRIL_2	LinMoving	Max V2	-3.22	223.57	-0.02	81.68	0.26	2444.71	1-20	0
1	19	VP_CARRIL_2	LinMoving	Max V2	-3.10	236.21	-0.02	86.72	0.31	2387.28	1-21	0
1	20	VP_CARRIL_2	LinMoving	Max V2	-2.97	248.60	-0.02	91.75	0.37	2309.64	1-22	0
1	21	VP_CARRIL_2	LinMoving	Max V2	-2.82	260.71	-0.02	96.79	0.42	2212.86	1-23	0
1	22	VP_CARRIL_2	LinMoving	Max V2	-2.66	272.53	-0.02	101.82	0.48	2098.11	1-24	0
1	23	VP_CARRIL_2	LinMoving	Max V2	-2.48	284.05	-0.03	106.86	0.55	1966.59	1-25	0
1	24	VP_CARRIL_2	LinMoving	Max V2	-2.30	295.25	-0.03	111.89	0.62	1819.60	1-26	0
1	25	VP_CARRIL_2	LinMoving	Max V2	-2.11	306.11	-0.03	116.93	0.69	1658.47	1-27	0
1	26	VP_CARRIL_2	LinMoving	Max V2	-1.92	316.61	-0.03	121.96	0.76	1484.59	1-28	0
1	27	VP_CARRIL_2	LinMoving	Max V2	-1.72	326.76	-0.03	127.00	0.84	1299.44	1-29	0
1	28	VP_CARRIL_2	LinMoving	Max V2	-1.51	336.51	-0.04	132.03	0.92	1104.53	1-30	0
1	29	VP_CARRIL_2	LinMoving	Max V2	-1.31	345.87	-0.04	137.07	1.00	901.46	1-31	0
1	30	VP_CARRIL_2	LinMoving	Max V2	-1.11	354.82	-0.04	142.10	1.09	691.87	1-32	0
1	31	VP_CARRIL_2	LinMoving	Max V2	-0.92	363.33	-0.04	147.14	1.18	477.47	1-33	0
1	32	VP_CARRIL_2	LinMoving	Max V2	-0.54	379.02	-0.04	157.21	1.33	420.42	1-34	0
1	33	VP_CARRIL_2	LinMoving	Max V2	-0.37	386.16	-0.05	162.24	1.43	209.63	1-35	0
1	33.75	VP_CARRIL_2	LinMoving	Max V2	-0.37	386.16	-0.05	162.24	1.47	-79.99	1-36	0
1	34.5	VP_CARRIL_2	LinMoving	Max V2	-0.55	3.64	0.00	-2.06	-0.17	23.48	1-37	0
1	35.25	VP_CARRIL_2	LinMoving	Max V2	-0.55	3.64	0.00	-2.06	-0.17	20.75	1-38	0
1	36	VP_CARRIL_2	LinMoving	Max V2	-0.17	5.92	0.05	32.29	1.49	192.21	1-39	0
1	37	VP_CARRIL_2	LinMoving	Max V2	-0.33	12.48	0.05	36.81	1.40	392.65	1-40	0
1	38	VP_CARRIL_2	LinMoving	Max V2	-0.51	19.52	0.04	41.78	1.30	594.76	1-41	0
1	39	VP_CARRIL_2	LinMoving	Max V2	-0.69	27.04	0.04	46.82	1.21	796.85	1-42	0
1	40	VP_CARRIL_2	LinMoving	Max V2	-0.88	35.02	0.04	51.85	1.11	997.10	1-43	0
1	41	VP_CARRIL_2	LinMoving	Max V2	-1.07	43.45	0.04	56.89	1.03	1193.70	1-44	0
1	42	VP_CARRIL_2	LinMoving	Max V2	-1.27	52.31	0.04	61.93	0.94	1384.88	1-45	0
1	43	VP_CARRIL_2	LinMoving	Max V2	-1.47	61.58	0.04	66.96	0.86	1568.97	1-46	0
1	44	VP_CARRIL_2	LinMoving	Max V2	-1.68	71.26	0.03	72.00	0.78	1744.33	1-47	0
1	45	VP_CARRIL_2	LinMoving	Max V2	-1.88	81.33	0.03	77.03	0.71	1909.40	1-48	0
1	46	VP_CARRIL_2	LinMoving	Max V2	-2.07	91.76	0.03	82.07	0.64	2062.68	1-49	0
1	47	VP_CARRIL_2	LinMoving	Max V2	-2.26	102.55	0.03	87.10	0.57	2202.73	1-50	0
1	48	VP_CARRIL_2	LinMoving	Max V2	-2.45	113.68	0.03	92.14	0.50	2328.16	1-51	0
1	49	VP_CARRIL_2	LinMoving	Max V2	-2.62	125.14	0.03	97.17	0.44	2437.66	1-52	0
1	50	VP_CARRIL_2	LinMoving	Max V2	-2.79	136.90	0.02	102.21	0.38	2529.97	1-53	0
1	51	VP_CARRIL_2	LinMoving	Max V2	-2.94	148.96	0.02	107.24	0.33	2603.90	1-54	0

ESTRUCTURA E1. ESFUERZOS EN TABLERO PARA TODOS LOS CASOS E HIPOTESIS DE CARGA

Frame	Station	OutputCase	CaseType	StepType	P	V2	V3	T	M2	M3	FrameElem	ElemStation
Text	m	Text	Text	Text	KN	KN	KN	KN-m	KN-m	KN-m	Text	m
1	52	VP_CARRIL_2	LinMoving	Max V2	-3.07	161.29	0.02	112.28	0.28	2658.32	1-55	0
1	53	VP_CARRIL_2	LinMoving	Max V2	-3.19	173.89	0.02	117.31	0.23	2692.15	1-56	0
1	54	VP_CARRIL_2	LinMoving	Max V2	-3.30	186.73	0.02	122.35	0.19	2704.39	1-57	0
1	55	VP_CARRIL_2	LinMoving	Max V2	-3.38	199.80	0.02	127.38	0.15	2694.08	1-58	0
1	56	VP_CARRIL_2	LinMoving	Max V2	-3.44	213.09	0.01	132.42	0.11	2660.35	1-59	0
1	57	VP_CARRIL_2	LinMoving	Max V2	-3.47	226.59	0.01	137.45	0.07	2602.36	1-60	0
1	58	VP_CARRIL_2	LinMoving	Max V2	-3.48	240.26	0.01	142.49	0.04	2519.37	1-61	0
1	59	VP_CARRIL_2	LinMoving	Max V2	-3.46	254.11	0.01	147.52	0.02	2410.66	1-62	0
1	60	VP_CARRIL_2	LinMoving	Max V2	-3.41	268.11	0.01	152.56	-0.01	2275.59	1-63	0
1	61	VP_CARRIL_2	LinMoving	Max V2	-3.33	282.24	0.00	157.59	-0.03	2113.60	1-64	0
1	62	VP_CARRIL_2	LinMoving	Max V2	-3.22	296.51	0.00	162.63	-0.05	1924.17	1-65	0
1	63	VP_CARRIL_2	LinMoving	Max V2	-3.07	310.88	0.00	167.66	-0.06	1706.84	1-66	0
1	64	VP_CARRIL_2	LinMoving	Max V2	-2.89	325.34	0.00	172.70	-0.07	1461.22	1-67	0
1	65	VP_CARRIL_2	LinMoving	Max V2	-2.66	339.88	0.00	177.73	-0.08	1186.99	1-68	0
1	66	VP_CARRIL_2	LinMoving	Max V2	-2.40	354.48	0.00	182.77	-0.08	883.87	1-69	0
1	67	VP_CARRIL_2	LinMoving	Max V2	-2.09	369.12	-0.01	187.80	-0.08	551.74	1-70	0
1	67.5	VP_CARRIL_2	LinMoving	Max V2	-2.09	369.12	-0.01	187.80	-0.08	367.32	1-71	0
1	68.5	VP_CARRIL_2	LinMoving	Max V2	0.00	0.00	0.00	0.00	0.00	0.00	1-72	0
1	0	VP_CARRIL_2	LinMoving	Min V2	0.00	0.00	0.00	0.00	0.00	0.00	1-1	0
1	0.5	VP_CARRIL_2	LinMoving	Min V2	-1.74	-383.80	0.01	-192.13	-0.08	-1.50	1-2	0
1	1.5	VP_CARRIL_2	LinMoving	Min V2	-2.09	-369.12	0.01	-187.80	-0.08	367.18	1-3	0
1	2	VP_CARRIL_2	LinMoving	Min V2	-2.09	-369.12	0.01	-187.80	-0.08	551.66	1-4	0
1	3	VP_CARRIL_2	LinMoving	Min V2	-2.40	-354.48	0.00	-182.77	-0.08	883.87	1-5	0
1	4	VP_CARRIL_2	LinMoving	Min V2	-2.66	-339.88	0.00	-177.73	-0.08	1186.99	1-6	0
1	5	VP_CARRIL_2	LinMoving	Min V2	-2.89	-325.34	0.00	-172.70	-0.07	1461.22	1-7	0
1	6	VP_CARRIL_2	LinMoving	Min V2	-3.07	-310.88	0.00	-167.66	-0.06	1706.84	1-8	0
1	7	VP_CARRIL_2	LinMoving	Min V2	-3.22	-296.51	0.00	-162.63	-0.05	1924.17	1-9	0
1	8	VP_CARRIL_2	LinMoving	Min V2	-3.33	-282.24	0.00	-157.59	-0.03	2113.60	1-10	0
1	9	VP_CARRIL_2	LinMoving	Min V2	-3.41	-268.11	-0.01	-152.56	-0.01	2275.59	1-11	0
1	10	VP_CARRIL_2	LinMoving	Min V2	-3.46	-254.11	-0.01	-147.52	0.02	2410.65	1-12	0
1	11	VP_CARRIL_2	LinMoving	Min V2	-3.48	-240.26	-0.01	-142.49	0.04	2519.37	1-13	0
1	12	VP_CARRIL_2	LinMoving	Min V2	-3.47	-226.59	-0.01	-137.45	0.07	2602.36	1-14	0
1	13	VP_CARRIL_2	LinMoving	Min V2	-3.44	-213.09	-0.01	-132.42	0.11	2660.35	1-15	0
1	14	VP_CARRIL_2	LinMoving	Min V2	-3.38	-199.80	-0.02	-127.38	0.15	2694.08	1-16	0
1	15	VP_CARRIL_2	LinMoving	Min V2	-3.30	-186.73	-0.02	-122.35	0.19	2704.39	1-17	0
1	16	VP_CARRIL_2	LinMoving	Min V2	-3.19	-173.89	-0.02	-117.31	0.23	2692.15	1-18	0
1	17	VP_CARRIL_2	LinMoving	Min V2	-3.07	-161.29	-0.02	-112.28	0.28	2658.32	1-19	0
1	18	VP_CARRIL_2	LinMoving	Min V2	-2.94	-148.96	-0.02	-107.24	0.33	2603.90	1-20	0
1	19	VP_CARRIL_2	LinMoving	Min V2	-2.79	-136.90	-0.02	-102.21	0.38	2529.97	1-21	0
1	20	VP_CARRIL_2	LinMoving	Min V2	-2.62	-125.14	-0.03	-97.17	0.44	2437.66	1-22	0
1	21	VP_CARRIL_2	LinMoving	Min V2	-2.45	-113.68	-0.03	-92.14	0.50	2328.16	1-23	0
1	22	VP_CARRIL_2	LinMoving	Min V2	-2.26	-102.55	-0.03	-87.10	0.57	2202.73	1-24	0
1	23	VP_CARRIL_2	LinMoving	Min V2	-2.07	-91.76	-0.03	-82.07	0.64	2062.68	1-25	0
1	24	VP_CARRIL_2	LinMoving	Min V2	-1.88	-81.33	-0.03	-77.03	0.71	1909.40	1-26	0
1	25	VP_CARRIL_2	LinMoving	Min V2	-1.68	-71.26	-0.03	-72.00	0.78	1744.33	1-27	0
1	26	VP_CARRIL_2	LinMoving	Min V2	-1.47	-61.58	-0.04	-66.96	0.86	1568.97	1-28	0
1	27	VP_CARRIL_2	LinMoving	Min V2	-1.27	-52.31	-0.04	-61.93	0.94	1384.88	1-29	0
1	28	VP_CARRIL_2	LinMoving	Min V2	-1.07	-43.45	-0.04	-56.89	1.03	1193.70	1-30	0
1	29	VP_CARRIL_2	LinMoving	Min V2	-0.88	-35.02	-0.04	-51.85	1.11	997.10	1-31	0
1	30	VP_CARRIL_2	LinMoving	Min V2	-0.69	-27.04	-0.04	-46.82	1.21	796.85	1-32	0
1	31	VP_CARRIL_2	LinMoving	Min V2	-0.51	-19.52	-0.04	-41.78	1.30	594.76	1-33	0
1	32	VP_CARRIL_2	LinMoving	Min V2	-0.33	-12.48	-0.05	-36.81	1.40	392.65	1-34	0
1	33	VP_CARRIL_2	LinMoving	Min V2	-0.17	-5.92	-0.05	-32.29	1.49	192.21	1-35	0
1	33.75	VP_CARRIL_2	LinMoving	Min V2	-0.55	-3.64	0.00	2.06	-0.17	20.74	1-36	0
1	34.5	VP_CARRIL_2	LinMoving	Min V2	-0.21	-392.81	0.05	-166.95	1.55	-195.64	1-37	0
1	35.25	VP_CARRIL_2	LinMoving	Min V2	-0.37	-386.16	0.05	-162.24	1.47	-79.99	1-38	0
1	36	VP_CARRIL_2	LinMoving	Min V2	-0.37	-386.16	0.05	-162.24	1.43	209.61	1-39	0
1	37	VP_CARRIL_2	LinMoving	Min V2	-0.73	-371.41	0.04	-152.17	1.28	260.04	1-40	0
1	38	VP_CARRIL_2	LinMoving	Min V2	-0.92	-363.33	0.04	-147.14	1.18	477.47	1-41	0
1	39	VP_CARRIL_2	LinMoving	Min V2	-1.11	-354.82	0.04	-142.10	1.09	691.87	1-42	0
1	40	VP_CARRIL_2	LinMoving	Min V2	-1.31	-345.87	0.04	-137.07	1.00	901.46	1-43	0
1	41	VP_CARRIL_2	LinMoving	Min V2	-1.51	-336.51	0.04	-132.03	0.92	1104.53	1-44	0
1	42	VP_CARRIL_2	LinMoving	Min V2	-1.72	-326.76	0.03	-127.00	0.84	1299.44	1-45	0
1	43	VP_CARRIL_2	LinMoving	Min V2	-1.92	-316.61	0.03	-121.96	0.76	1484.59	1-46	0
1	44	VP_CARRIL_2	LinMoving	Min V2	-2.11	-306.11	0.03	-116.93	0.69	1658.47	1-47	0
1	45	VP_CARRIL_2	LinMoving	Min V2	-2.30	-295.25	0.03	-111.89	0.62	1819.60	1-48	0
1	46	VP_CARRIL_2	LinMoving	Min V2	-2.48	-284.05	0.03	-106.86	0.55	1966.59	1-49	0
1	47	VP_CARRIL_2	LinMoving	Min V2	-2.66	-272.53	0.02	-101.82	0.48	2098.11	1-50	0
1	48	VP_CARRIL_2	LinMoving	Min V2	-2.82	-260.71	0.02	-96.79	0.42	2212.86	1-51	0
1	49	VP_CARRIL_2	LinMoving	Min V2	-2.97	-248.60	0.02	-91.75	0.37	2309.64	1-52	0
1	50	VP_CARRIL_2	LinMoving	Min V2	-3.10	-236.21	0.02	-86.72	0.31	2387.28	1-53	0
1	51	VP_CARRIL_2	LinMoving	Min V2	-3.22	-223.57	0.02	-81.68	0.26	2444.71	1-54	0
1	52	VP_CARRIL_2	LinMoving	Min V2	-3.31	-210.67	0.02	-76.65	0.21	2480.88	1-55	0
1	53	VP_CARRIL_2	LinMoving	Min V2	-3.39	-197.56	0.01	-71.61	0.17	2494.83	1-56	0
1	54	VP_CARRIL_2	LinMoving	Min V2	-3.44	-184.22	0.01	-66.58	0.13	2485.65	1-57	0
1	55	VP_CARRIL_2	LinMoving	Min V2	-3.47	-170.70	0.01	-61.54	0.09	2452.50	1-58	0
1	56	VP_CARRIL_2	LinMoving	Min V2	-3.48	-156.98	0.01	-56.50	0.06	2394.59	1-59	0
1	57	VP_CARRIL_2	LinMoving	Min V2	-3.45	-143.11	0.01	-51.47	0.03	2311.20	1-60	0
1	58	VP_CARRIL_2	LinMoving	Min V2	-3.40	-129.08	0.01	-46.43	0.00	2201.68	1-61	0
1	59	VP_CARRIL_2	LinMoving	Min V2	-3.31	-114.91	0.00	-41.40	-0.02	2065.41	1-62	0
1	60	VP_CARRIL_2	LinMoving	Min V2	-3.19	-100.63	0.00	-36.36	-0.04	1901.87	1-63	0

ESTRUCTURA E1. ESFUERZOS EN TABLERO PARA TODOS LOS CASOS E HIPOTESIS DE CARGA

Frame	Station	OutputCase	CaseType	StepType	P	V2	V3	T	M2	M3	FrameElem	ElemStation
Text	m	Text	Text	Text	KN	KN	KN	KN-m	KN-m	KN-m	Text	m
1	61	VP_CARRIL_2	LinMoving	Min V2	-3.04	-86.24	0.00	-31.33	-0.06	1710.58	1-64	0
1	62	VP_CARRIL_2	LinMoving	Min V2	-2.84	-71.76	0.00	-26.29	-0.08	1491.13	1-65	0
1	63	VP_CARRIL_2	LinMoving	Min V2	-2.61	-57.21	0.00	-21.26	-0.09	1243.17	1-66	0
1	64	VP_CARRIL_2	LinMoving	Min V2	-2.34	-42.60	0.00	-16.22	-0.09	966.40	1-67	0
1	65	VP_CARRIL_2	LinMoving	Min V2	-0.25	-38.42	0.02	16.69	0.07	-134.69	1-68	0
1	66	VP_CARRIL_2	LinMoving	Min V2	-0.25	-38.42	0.02	16.69	0.05	-96.28	1-69	0
1	67	VP_CARRIL_2	LinMoving	Min V2	-0.25	-38.42	0.02	16.69	0.02	-57.85	1-70	0
1	67.5	VP_CARRIL_2	LinMoving	Min V2	-0.25	-38.42	0.02	16.69	0.01	-38.63	1-71	0
1	68.5	VP_CARRIL_2	LinMoving	Min V2	0.00	-200.00	0.00	-100.00	0.00	-99.80	1-72	0
1	0	VP_CARRIL_2	LinMoving	Max V3	0.00	0.00	0.00	0.00	0.00	0.00	1-1	0
1	0.5	VP_CARRIL_2	LinMoving	Max V3	-0.88	0.34	0.01	-0.85	-0.01	-0.76	1-2	0
1	1.5	VP_CARRIL_2	LinMoving	Max V3	-0.88	0.34	0.01	-0.86	-0.02	-1.16	1-3	0
1	2	VP_CARRIL_2	LinMoving	Max V3	-0.88	0.34	0.01	-0.86	-0.02	-1.36	1-4	0
1	3	VP_CARRIL_2	LinMoving	Max V3	-0.88	0.34	0.01	-0.86	-0.03	-1.70	1-5	0
1	4	VP_CARRIL_2	LinMoving	Max V3	-0.88	0.34	0.01	-0.86	-0.04	-2.04	1-6	0
1	5	VP_CARRIL_2	LinMoving	Max V3	-0.88	0.34	0.01	-0.86	-0.05	-2.38	1-7	0
1	6	VP_CARRIL_2	LinMoving	Max V3	-0.88	0.34	0.01	-0.86	-0.06	-2.72	1-8	0
1	7	VP_CARRIL_2	LinMoving	Max V3	-0.88	0.34	0.01	-0.86	-0.07	-3.05	1-9	0
1	8	VP_CARRIL_2	LinMoving	Max V3	-0.88	0.34	0.01	-0.86	-0.08	-3.39	1-10	0
1	9	VP_CARRIL_2	LinMoving	Max V3	-0.88	0.34	0.01	-0.86	-0.09	-3.73	1-11	0
1	10	VP_CARRIL_2	LinMoving	Max V3	-0.88	0.34	0.01	-0.86	-0.10	-4.07	1-12	0
1	11	VP_CARRIL_2	LinMoving	Max V3	-0.88	0.34	0.01	-0.86	-0.11	-4.41	1-13	0
1	12	VP_CARRIL_2	LinMoving	Max V3	-0.88	0.34	0.01	-0.86	-0.12	-4.75	1-14	0
1	13	VP_CARRIL_2	LinMoving	Max V3	-0.88	0.34	0.01	-0.86	-0.13	-5.09	1-15	0
1	14	VP_CARRIL_2	LinMoving	Max V3	-0.88	0.34	0.01	-0.86	-0.14	-5.43	1-16	0
1	15	VP_CARRIL_2	LinMoving	Max V3	-0.88	0.34	0.01	-0.86	-0.15	-5.77	1-17	0
1	16	VP_CARRIL_2	LinMoving	Max V3	-0.88	0.34	0.01	-0.86	-0.16	-6.10	1-18	0
1	17	VP_CARRIL_2	LinMoving	Max V3	-0.88	0.34	0.01	-0.86	-0.17	-6.44	1-19	0
1	18	VP_CARRIL_2	LinMoving	Max V3	-0.88	0.34	0.01	-0.86	-0.18	-6.78	1-20	0
1	19	VP_CARRIL_2	LinMoving	Max V3	-0.88	0.34	0.01	-0.86	-0.19	-7.12	1-21	0
1	20	VP_CARRIL_2	LinMoving	Max V3	-0.88	0.34	0.01	-0.86	-0.20	-7.46	1-22	0
1	21	VP_CARRIL_2	LinMoving	Max V3	-0.88	0.34	0.01	-0.86	-0.21	-7.80	1-23	0
1	22	VP_CARRIL_2	LinMoving	Max V3	-0.88	0.34	0.01	-0.86	-0.22	-8.14	1-24	0
1	23	VP_CARRIL_2	LinMoving	Max V3	-0.88	0.34	0.01	-0.86	-0.23	-8.48	1-25	0
1	24	VP_CARRIL_2	LinMoving	Max V3	-0.88	0.34	0.01	-0.86	-0.24	-8.81	1-26	0
1	25	VP_CARRIL_2	LinMoving	Max V3	-0.88	0.34	0.01	-0.86	-0.24	-9.15	1-27	0
1	26	VP_CARRIL_2	LinMoving	Max V3	-0.88	0.34	0.01	-0.86	-0.25	-9.49	1-28	0
1	27	VP_CARRIL_2	LinMoving	Max V3	-0.88	0.34	0.01	-0.86	-0.26	-9.83	1-29	0
1	28	VP_CARRIL_2	LinMoving	Max V3	-0.88	0.34	0.01	-0.86	-0.27	-10.17	1-30	0
1	29	VP_CARRIL_2	LinMoving	Max V3	-0.88	0.34	0.01	-0.86	-0.28	-10.51	1-31	0
1	30	VP_CARRIL_2	LinMoving	Max V3	-0.88	0.34	0.01	-0.86	-0.29	-10.85	1-32	0
1	31	VP_CARRIL_2	LinMoving	Max V3	-0.88	0.34	0.01	-0.86	-0.30	-11.19	1-33	0
1	32	VP_CARRIL_2	LinMoving	Max V3	-0.88	0.34	0.01	-0.86	-0.31	-11.53	1-34	0
1	33	VP_CARRIL_2	LinMoving	Max V3	-0.88	0.34	0.01	-0.86	-0.32	-11.83	1-35	0
1	33.75	VP_CARRIL_2	LinMoving	Max V3	-0.88	0.34	0.01	-0.86	-0.33	-12.08	1-36	0
1	34.5	VP_CARRIL_2	LinMoving	Max V3	-0.06	-198.98	0.05	-70.49	1.58	-105.29	1-37	0
1	35.25	VP_CARRIL_2	LinMoving	Max V3	-0.06	-38.98	0.05	9.51	1.54	3.94	1-38	0
1	36	VP_CARRIL_2	LinMoving	Max V3	-0.06	1.02	0.05	29.51	1.51	33.17	1-39	0
1	37	VP_CARRIL_2	LinMoving	Max V3	-0.06	1.02	0.05	29.51	1.46	32.15	1-40	0
1	38	VP_CARRIL_2	LinMoving	Max V3	-0.06	1.02	0.05	29.51	1.41	31.13	1-41	0
1	39	VP_CARRIL_2	LinMoving	Max V3	-0.06	1.02	0.05	29.51	1.37	30.11	1-42	0
1	40	VP_CARRIL_2	LinMoving	Max V3	-0.06	1.02	0.05	29.51	1.32	29.08	1-43	0
1	41	VP_CARRIL_2	LinMoving	Max V3	-0.06	1.02	0.05	29.51	1.27	28.06	1-44	0
1	42	VP_CARRIL_2	LinMoving	Max V3	-0.06	1.02	0.05	29.51	1.23	27.04	1-45	0
1	43	VP_CARRIL_2	LinMoving	Max V3	-0.06	1.02	0.05	29.51	1.18	26.02	1-46	0
1	44	VP_CARRIL_2	LinMoving	Max V3	-0.06	1.02	0.05	29.51	1.13	24.99	1-47	0
1	45	VP_CARRIL_2	LinMoving	Max V3	-0.06	1.02	0.05	29.51	1.09	23.97	1-48	0
1	46	VP_CARRIL_2	LinMoving	Max V3	-0.06	1.02	0.05	29.51	1.04	22.95	1-49	0
1	47	VP_CARRIL_2	LinMoving	Max V3	-0.06	1.02	0.05	29.51	0.99	21.93	1-50	0
1	48	VP_CARRIL_2	LinMoving	Max V3	-0.06	1.02	0.05	29.51	0.94	20.91	1-51	0
1	49	VP_CARRIL_2	LinMoving	Max V3	-0.06	1.02	0.05	29.51	0.90	19.88	1-52	0
1	50	VP_CARRIL_2	LinMoving	Max V3	-0.06	1.02	0.05	29.51	0.85	18.86	1-53	0
1	51	VP_CARRIL_2	LinMoving	Max V3	-0.06	1.02	0.05	29.51	0.80	17.84	1-54	0
1	52	VP_CARRIL_2	LinMoving	Max V3	-0.06	1.02	0.05	29.51	0.76	16.82	1-55	0
1	53	VP_CARRIL_2	LinMoving	Max V3	-0.06	1.02	0.05	29.51	0.71	15.79	1-56	0
1	54	VP_CARRIL_2	LinMoving	Max V3	-0.06	1.02	0.05	29.51	0.66	14.77	1-57	0
1	55	VP_CARRIL_2	LinMoving	Max V3	-0.06	1.02	0.05	29.51	0.62	13.75	1-58	0
1	56	VP_CARRIL_2	LinMoving	Max V3	-0.06	1.02	0.05	29.51	0.57	12.73	1-59	0
1	57	VP_CARRIL_2	LinMoving	Max V3	-0.06	1.02	0.05	29.51	0.52	11.70	1-60	0
1	58	VP_CARRIL_2	LinMoving	Max V3	-0.06	1.02	0.05	29.51	0.48	10.68	1-61	0
1	59	VP_CARRIL_2	LinMoving	Max V3	-0.06	1.02	0.05	29.51	0.43	9.66	1-62	0
1	60	VP_CARRIL_2	LinMoving	Max V3	-0.06	1.02	0.05	29.51	0.38	8.64	1-63	0
1	61	VP_CARRIL_2	LinMoving	Max V3	-0.06	1.02	0.05	29.51	0.34	7.61	1-64	0
1	62	VP_CARRIL_2	LinMoving	Max V3	-0.06	1.02	0.05	29.51	0.29	6.59	1-65	0
1	63	VP_CARRIL_2	LinMoving	Max V3	-0.06	1.02	0.05	29.51	0.24	5.57	1-66	0
1	64	VP_CARRIL_2	LinMoving	Max V3	-0.06	1.02	0.05	29.51	0.20	4.55	1-67	0
1	65	VP_CARRIL_2	LinMoving	Max V3	-0.06	1.02	0.05	29.51	0.15	3.52	1-68	0
1	66	VP_CARRIL_2	LinMoving	Max V3	-0.06	1.02	0.05	29.51	0.10	2.50	1-69	0
1	67	VP_CARRIL_2	LinMoving	Max V3	-0.06	1.02	0.05	29.51	0.06	1.48	1-70	0
1	67.5	VP_CARRIL_2	LinMoving	Max V3	-0.06	1.02	0.05	29.52	0.03	0.97	1-71	0
1	68.5	VP_CARRIL_2	LinMoving	Max V3	0.00	0.00	0.00	0.00	0.00	0.00	1-72	0

ESTRUCTURA E1. ESFUERZOS EN TABLERO PARA TODOS LOS CASOS E HIPOTESIS DE CARGA

Frame	Station	OutputCase	CaseType	StepType	P	V2	V3	T	M2	M3	FrameElem	ElemStation
Text	m	Text	Text	Text	KN	KN	KN	KN-m	KN-m	KN-m	Text	m
1	0	VP_CARRIL_2	LinMoving	Min V3	0.00	0.00	0.00	0.00	0.00	0.00	1-1	0
1	0.5	VP_CARRIL_2	LinMoving	Min V3	-0.06	-1.02	-0.05	-29.52	-0.01	-0.05	1-2	0
1	1.5	VP_CARRIL_2	LinMoving	Min V3	-0.06	-1.02	-0.05	-29.51	0.03	0.97	1-3	0
1	2	VP_CARRIL_2	LinMoving	Min V3	-0.06	-1.02	-0.05	-29.51	0.06	1.48	1-4	0
1	3	VP_CARRIL_2	LinMoving	Min V3	-0.06	-1.02	-0.05	-29.51	0.10	2.50	1-5	0
1	4	VP_CARRIL_2	LinMoving	Min V3	-0.06	-1.02	-0.05	-29.51	0.15	3.52	1-6	0
1	5	VP_CARRIL_2	LinMoving	Min V3	-0.06	-1.02	-0.05	-29.51	0.20	4.55	1-7	0
1	6	VP_CARRIL_2	LinMoving	Min V3	-0.06	-1.02	-0.05	-29.51	0.24	5.57	1-8	0
1	7	VP_CARRIL_2	LinMoving	Min V3	-0.06	-1.02	-0.05	-29.51	0.29	6.59	1-9	0
1	8	VP_CARRIL_2	LinMoving	Min V3	-0.06	-1.02	-0.05	-29.51	0.34	7.61	1-10	0
1	9	VP_CARRIL_2	LinMoving	Min V3	-0.06	-1.02	-0.05	-29.51	0.38	8.64	1-11	0
1	10	VP_CARRIL_2	LinMoving	Min V3	-0.06	-1.02	-0.05	-29.51	0.43	9.66	1-12	0
1	11	VP_CARRIL_2	LinMoving	Min V3	-0.06	-1.02	-0.05	-29.51	0.48	10.68	1-13	0
1	12	VP_CARRIL_2	LinMoving	Min V3	-0.06	-1.02	-0.05	-29.51	0.52	11.70	1-14	0
1	13	VP_CARRIL_2	LinMoving	Min V3	-0.06	-1.02	-0.05	-29.51	0.57	12.72	1-15	0
1	14	VP_CARRIL_2	LinMoving	Min V3	-0.06	-1.02	-0.05	-29.51	0.62	13.75	1-16	0
1	15	VP_CARRIL_2	LinMoving	Min V3	-0.06	-1.02	-0.05	-29.51	0.66	14.77	1-17	0
1	16	VP_CARRIL_2	LinMoving	Min V3	-0.06	-1.02	-0.05	-29.51	0.71	15.79	1-18	0
1	17	VP_CARRIL_2	LinMoving	Min V3	-0.06	-1.02	-0.05	-29.51	0.76	16.81	1-19	0
1	18	VP_CARRIL_2	LinMoving	Min V3	-0.06	-1.02	-0.05	-29.51	0.80	17.84	1-20	0
1	19	VP_CARRIL_2	LinMoving	Min V3	-0.06	-1.02	-0.05	-29.51	0.85	18.86	1-21	0
1	20	VP_CARRIL_2	LinMoving	Min V3	-0.06	-1.02	-0.05	-29.51	0.90	19.88	1-22	0
1	21	VP_CARRIL_2	LinMoving	Min V3	-0.06	-1.02	-0.05	-29.51	0.94	20.90	1-23	0
1	22	VP_CARRIL_2	LinMoving	Min V3	-0.06	-1.02	-0.05	-29.51	0.99	21.93	1-24	0
1	23	VP_CARRIL_2	LinMoving	Min V3	-0.06	-1.02	-0.05	-29.51	1.04	22.95	1-25	0
1	24	VP_CARRIL_2	LinMoving	Min V3	-0.06	-1.02	-0.05	-29.51	1.09	23.97	1-26	0
1	25	VP_CARRIL_2	LinMoving	Min V3	-0.06	-1.02	-0.05	-29.51	1.13	24.99	1-27	0
1	26	VP_CARRIL_2	LinMoving	Min V3	-0.06	-1.02	-0.05	-29.51	1.18	26.02	1-28	0
1	27	VP_CARRIL_2	LinMoving	Min V3	-0.06	-1.02	-0.05	-29.51	1.23	27.04	1-29	0
1	28	VP_CARRIL_2	LinMoving	Min V3	-0.06	-1.02	-0.05	-29.51	1.27	28.06	1-30	0
1	29	VP_CARRIL_2	LinMoving	Min V3	-0.06	-1.02	-0.05	-29.51	1.32	29.08	1-31	0
1	30	VP_CARRIL_2	LinMoving	Min V3	-0.06	-1.02	-0.05	-29.51	1.37	30.11	1-32	0
1	31	VP_CARRIL_2	LinMoving	Min V3	-0.06	-1.02	-0.05	-29.51	1.41	31.13	1-33	0
1	32	VP_CARRIL_2	LinMoving	Min V3	-0.06	-1.02	-0.05	-29.51	1.46	32.15	1-34	0
1	33	VP_CARRIL_2	LinMoving	Min V3	-0.06	-1.02	-0.05	-29.51	1.51	33.18	1-35	0
1	33.75	VP_CARRIL_2	LinMoving	Min V3	-0.06	38.99	-0.05	-9.51	1.54	3.94	1-36	0
1	34.5	VP_CARRIL_2	LinMoving	Min V3	-0.88	-0.34	-0.01	0.86	-0.34	-12.34	1-37	0
1	35.25	VP_CARRIL_2	LinMoving	Min V3	-0.88	-0.34	-0.01	0.86	-0.33	-12.09	1-38	0
1	36	VP_CARRIL_2	LinMoving	Min V3	-0.88	-0.34	-0.01	0.86	-0.32	-11.87	1-39	0
1	37	VP_CARRIL_2	LinMoving	Min V3	-0.88	-0.34	-0.01	0.86	-0.31	-11.53	1-40	0
1	38	VP_CARRIL_2	LinMoving	Min V3	-0.88	-0.34	-0.01	0.86	-0.30	-11.19	1-41	0
1	39	VP_CARRIL_2	LinMoving	Min V3	-0.88	-0.34	-0.01	0.86	-0.29	-10.85	1-42	0
1	40	VP_CARRIL_2	LinMoving	Min V3	-0.88	-0.34	-0.01	0.86	-0.28	-10.51	1-43	0
1	41	VP_CARRIL_2	LinMoving	Min V3	-0.88	-0.34	-0.01	0.86	-0.27	-10.17	1-44	0
1	42	VP_CARRIL_2	LinMoving	Min V3	-0.88	-0.34	-0.01	0.86	-0.26	-9.83	1-45	0
1	43	VP_CARRIL_2	LinMoving	Min V3	-0.88	-0.34	-0.01	0.86	-0.25	-9.49	1-46	0
1	44	VP_CARRIL_2	LinMoving	Min V3	-0.88	-0.34	-0.01	0.86	-0.24	-9.15	1-47	0
1	45	VP_CARRIL_2	LinMoving	Min V3	-0.88	-0.34	-0.01	0.86	-0.23	-8.82	1-48	0
1	46	VP_CARRIL_2	LinMoving	Min V3	-0.88	-0.34	-0.01	0.86	-0.22	-8.48	1-49	0
1	47	VP_CARRIL_2	LinMoving	Min V3	-0.88	-0.34	-0.01	0.86	-0.22	-8.14	1-50	0
1	48	VP_CARRIL_2	LinMoving	Min V3	-0.88	-0.34	-0.01	0.86	-0.21	-7.80	1-51	0
1	49	VP_CARRIL_2	LinMoving	Min V3	-0.88	-0.34	-0.01	0.86	-0.20	-7.46	1-52	0
1	50	VP_CARRIL_2	LinMoving	Min V3	-0.88	-0.34	-0.01	0.86	-0.19	-7.12	1-53	0
1	51	VP_CARRIL_2	LinMoving	Min V3	-0.88	-0.34	-0.01	0.86	-0.18	-6.78	1-54	0
1	52	VP_CARRIL_2	LinMoving	Min V3	-0.88	-0.34	-0.01	0.86	-0.17	-6.44	1-55	0
1	53	VP_CARRIL_2	LinMoving	Min V3	-0.88	-0.34	-0.01	0.86	-0.16	-6.10	1-56	0
1	54	VP_CARRIL_2	LinMoving	Min V3	-0.88	-0.34	-0.01	0.86	-0.15	-5.77	1-57	0
1	55	VP_CARRIL_2	LinMoving	Min V3	-0.88	-0.34	-0.01	0.86	-0.14	-5.43	1-58	0
1	56	VP_CARRIL_2	LinMoving	Min V3	-0.88	-0.34	-0.01	0.86	-0.13	-5.09	1-59	0
1	57	VP_CARRIL_2	LinMoving	Min V3	-0.88	-0.34	-0.01	0.86	-0.12	-4.75	1-60	0
1	58	VP_CARRIL_2	LinMoving	Min V3	-0.88	-0.34	-0.01	0.86	-0.11	-4.41	1-61	0
1	59	VP_CARRIL_2	LinMoving	Min V3	-0.88	-0.34	-0.01	0.86	-0.10	-4.07	1-62	0
1	60	VP_CARRIL_2	LinMoving	Min V3	-0.88	-0.34	-0.01	0.86	-0.09	-3.73	1-63	0
1	61	VP_CARRIL_2	LinMoving	Min V3	-0.88	-0.34	-0.01	0.86	-0.08	-3.39	1-64	0
1	62	VP_CARRIL_2	LinMoving	Min V3	-0.88	-0.34	-0.01	0.86	-0.07	-3.05	1-65	0
1	63	VP_CARRIL_2	LinMoving	Min V3	-0.88	-0.34	-0.01	0.86	-0.06	-2.72	1-66	0
1	64	VP_CARRIL_2	LinMoving	Min V3	-0.88	-0.34	-0.01	0.86	-0.05	-2.38	1-67	0
1	65	VP_CARRIL_2	LinMoving	Min V3	-0.88	-0.34	-0.01	0.86	-0.04	-2.04	1-68	0
1	66	VP_CARRIL_2	LinMoving	Min V3	-0.88	-0.34	-0.01	0.86	-0.03	-1.70	1-69	0
1	67	VP_CARRIL_2	LinMoving	Min V3	-0.88	-0.34	-0.01	0.86	-0.02	-1.33	1-70	0
1	67.5	VP_CARRIL_2	LinMoving	Min V3	-0.88	-0.34	-0.01	0.85	-0.02	-1.10	1-71	0
1	68.5	VP_CARRIL_2	LinMoving	Min V3	0.00	0.00	0.00	0.00	0.00	0.00	1-72	0
1	0	VP_CARRIL_2	LinMoving	Max T	0.00	0.00	0.00	0.00	0.00	0.00	1-1	0
1	0.5	VP_CARRIL_2	LinMoving	Max T	-0.55	-3.64	0.00	2.06	-0.04	-100.28	1-2	0
1	1.5	VP_CARRIL_2	LinMoving	Max T	-0.76	3.70	0.00	2.77	-0.04	95.79	1-3	0
1	2	VP_CARRIL_2	LinMoving	Max T	-0.76	3.70	0.00	2.77	-0.04	93.91	1-4	0
1	3	VP_CARRIL_2	LinMoving	Max T	-1.66	13.27	0.01	7.22	-0.09	325.59	1-5	0
1	4	VP_CARRIL_2	LinMoving	Max T	-2.02	27.95	0.01	11.33	-0.10	660.60	1-6	0
1	5	VP_CARRIL_2	LinMoving	Max T	-2.34	42.60	0.00	16.22	-0.09	966.40	1-7	0
1	6	VP_CARRIL_2	LinMoving	Max T	-2.61	57.21	0.00	21.26	-0.09	1243.17	1-8	0
1	7	VP_CARRIL_2	LinMoving	Max T	-2.84	71.76	0.00	26.29	-0.08	1491.13	1-9	0

ESTRUCTURA E1. ESFUERZOS EN TABLERO PARA TODOS LOS CASOS E HIPOTESIS DE CARGA

Frame	Station	OutputCase	CaseType	StepType	P	V2	V3	T	M2	M3	FrameElem	ElemStation
Text	m	Text	Text	Text	KN	KN	KN	KN-m	KN-m	KN-m	Text	m
1	8	VP_CARRIL_2	LinMoving	Max T	-3.04	86.24	0.00	31.33	-0.06	1710.58	1-10	0
1	9	VP_CARRIL_2	LinMoving	Max T	-3.19	100.63	0.00	36.36	-0.04	1901.87	1-11	0
1	10	VP_CARRIL_2	LinMoving	Max T	-3.31	114.91	0.00	41.40	-0.02	2065.41	1-12	0
1	11	VP_CARRIL_2	LinMoving	Max T	-3.40	129.08	-0.01	46.44	0.00	2201.68	1-13	0
1	12	VP_CARRIL_2	LinMoving	Max T	-3.45	143.11	-0.01	51.47	0.03	2311.20	1-14	0
1	13	VP_CARRIL_2	LinMoving	Max T	-3.48	156.98	-0.01	56.51	0.06	2394.59	1-15	0
1	14	VP_CARRIL_2	LinMoving	Max T	-3.47	170.70	-0.01	61.54	0.09	2452.50	1-16	0
1	15	VP_CARRIL_2	LinMoving	Max T	-3.44	184.22	-0.01	66.58	0.13	2485.65	1-17	0
1	16	VP_CARRIL_2	LinMoving	Max T	-3.39	197.56	-0.01	71.61	0.17	2494.83	1-18	0
1	17	VP_CARRIL_2	LinMoving	Max T	-3.31	210.67	-0.02	76.65	0.21	2480.88	1-19	0
1	18	VP_CARRIL_2	LinMoving	Max T	-3.22	223.57	-0.02	81.68	0.26	2444.71	1-20	0
1	19	VP_CARRIL_2	LinMoving	Max T	-3.10	236.21	-0.02	86.72	0.31	2387.28	1-21	0
1	20	VP_CARRIL_2	LinMoving	Max T	-2.97	248.60	-0.02	91.75	0.37	2309.64	1-22	0
1	21	VP_CARRIL_2	LinMoving	Max T	-2.82	260.71	-0.02	96.79	0.42	2212.86	1-23	0
1	22	VP_CARRIL_2	LinMoving	Max T	-2.66	272.53	-0.02	101.82	0.48	2098.11	1-24	0
1	23	VP_CARRIL_2	LinMoving	Max T	-2.48	284.05	-0.03	106.86	0.55	1966.59	1-25	0
1	24	VP_CARRIL_2	LinMoving	Max T	-2.30	295.25	-0.03	111.89	0.62	1819.60	1-26	0
1	25	VP_CARRIL_2	LinMoving	Max T	-2.11	306.11	-0.03	116.93	0.69	1658.47	1-27	0
1	26	VP_CARRIL_2	LinMoving	Max T	-1.92	316.61	-0.03	121.96	0.76	1484.59	1-28	0
1	27	VP_CARRIL_2	LinMoving	Max T	-1.72	326.76	-0.03	127.00	0.84	1299.44	1-29	0
1	28	VP_CARRIL_2	LinMoving	Max T	-1.51	336.51	-0.04	132.03	0.92	1104.53	1-30	0
1	29	VP_CARRIL_2	LinMoving	Max T	-1.31	345.87	-0.04	137.07	1.00	901.46	1-31	0
1	30	VP_CARRIL_2	LinMoving	Max T	-1.11	354.82	-0.04	142.10	1.09	691.87	1-32	0
1	31	VP_CARRIL_2	LinMoving	Max T	-0.92	363.33	-0.04	147.14	1.18	477.47	1-33	0
1	32	VP_CARRIL_2	LinMoving	Max T	-0.54	379.02	-0.04	157.21	1.33	420.42	1-34	0
1	33	VP_CARRIL_2	LinMoving	Max T	-0.37	386.16	-0.05	162.24	1.43	209.63	1-35	0
1	33.75	VP_CARRIL_2	LinMoving	Max T	-0.37	386.16	-0.05	162.24	1.47	-79.99	1-36	0
1	34.5	VP_CARRIL_2	LinMoving	Max T	0.09	-5.75	0.05	27.36	1.55	-195.38	1-37	0
1	35.25	VP_CARRIL_2	LinMoving	Max T	-0.03	-0.15	0.05	29.00	1.54	-5.16	1-38	0
1	36	VP_CARRIL_2	LinMoving	Max T	-0.17	5.92	0.05	32.29	1.49	192.21	1-39	0
1	37	VP_CARRIL_2	LinMoving	Max T	-0.33	12.48	0.05	36.81	1.40	392.65	1-40	0
1	38	VP_CARRIL_2	LinMoving	Max T	-0.51	19.52	0.04	41.78	1.30	594.76	1-41	0
1	39	VP_CARRIL_2	LinMoving	Max T	-0.69	27.04	0.04	46.82	1.21	796.85	1-42	0
1	40	VP_CARRIL_2	LinMoving	Max T	-0.88	35.02	0.04	51.85	1.11	997.10	1-43	0
1	41	VP_CARRIL_2	LinMoving	Max T	-1.07	43.45	0.04	56.89	1.03	1193.70	1-44	0
1	42	VP_CARRIL_2	LinMoving	Max T	-1.27	52.31	0.04	61.93	0.94	1384.88	1-45	0
1	43	VP_CARRIL_2	LinMoving	Max T	-1.47	61.58	0.04	66.96	0.86	1568.97	1-46	0
1	44	VP_CARRIL_2	LinMoving	Max T	-1.68	71.26	0.03	72.00	0.78	1744.33	1-47	0
1	45	VP_CARRIL_2	LinMoving	Max T	-1.88	81.33	0.03	77.03	0.71	1909.40	1-48	0
1	46	VP_CARRIL_2	LinMoving	Max T	-2.07	91.76	0.03	82.07	0.64	2062.68	1-49	0
1	47	VP_CARRIL_2	LinMoving	Max T	-2.26	102.55	0.03	87.10	0.57	2202.73	1-50	0
1	48	VP_CARRIL_2	LinMoving	Max T	-2.45	113.68	0.03	92.14	0.50	2328.16	1-51	0
1	49	VP_CARRIL_2	LinMoving	Max T	-2.62	125.14	0.03	97.17	0.44	2437.66	1-52	0
1	50	VP_CARRIL_2	LinMoving	Max T	-2.79	136.90	0.02	102.21	0.38	2529.97	1-53	0
1	51	VP_CARRIL_2	LinMoving	Max T	-2.94	148.96	0.02	107.24	0.33	2603.90	1-54	0
1	52	VP_CARRIL_2	LinMoving	Max T	-3.07	161.29	0.02	112.28	0.28	2658.32	1-55	0
1	53	VP_CARRIL_2	LinMoving	Max T	-3.19	173.89	0.02	117.31	0.23	2692.15	1-56	0
1	54	VP_CARRIL_2	LinMoving	Max T	-3.30	186.73	0.02	122.35	0.19	2704.39	1-57	0
1	55	VP_CARRIL_2	LinMoving	Max T	-3.38	199.80	0.02	127.38	0.15	2694.08	1-58	0
1	56	VP_CARRIL_2	LinMoving	Max T	-3.44	213.09	0.01	132.42	0.11	2660.35	1-59	0
1	57	VP_CARRIL_2	LinMoving	Max T	-3.47	226.59	0.01	137.45	0.07	2602.36	1-60	0
1	58	VP_CARRIL_2	LinMoving	Max T	-3.48	240.26	0.01	142.49	0.04	2519.37	1-61	0
1	59	VP_CARRIL_2	LinMoving	Max T	-3.46	254.11	0.01	147.52	0.02	2410.66	1-62	0
1	60	VP_CARRIL_2	LinMoving	Max T	-3.41	268.11	0.01	152.56	-0.01	2275.59	1-63	0
1	61	VP_CARRIL_2	LinMoving	Max T	-3.33	282.24	0.00	157.59	-0.03	2113.60	1-64	0
1	62	VP_CARRIL_2	LinMoving	Max T	-3.22	296.51	0.00	162.63	-0.05	1924.17	1-65	0
1	63	VP_CARRIL_2	LinMoving	Max T	-3.07	310.88	0.00	167.66	-0.06	1706.84	1-66	0
1	64	VP_CARRIL_2	LinMoving	Max T	-2.89	325.34	0.00	172.70	-0.07	1461.22	1-67	0
1	65	VP_CARRIL_2	LinMoving	Max T	-2.66	339.88	0.00	177.73	-0.08	1186.99	1-68	0
1	66	VP_CARRIL_2	LinMoving	Max T	-2.40	354.48	0.00	182.77	-0.08	883.87	1-69	0
1	67	VP_CARRIL_2	LinMoving	Max T	-2.09	369.12	-0.01	187.80	-0.08	551.74	1-70	0
1	67.5	VP_CARRIL_2	LinMoving	Max T	-2.09	369.12	-0.01	187.80	-0.08	367.32	1-71	0
1	68.5	VP_CARRIL_2	LinMoving	Max T	0.00	0.00	0.00	0.00	0.00	0.00	1-72	0
1	0	VP_CARRIL_2	LinMoving	Min T	0.00	0.00	0.00	0.00	0.00	0.00	1-1	0
1	0.5	VP_CARRIL_2	LinMoving	Min T	-1.74	-383.80	0.01	-192.13	-0.08	-1.50	1-2	0
1	1.5	VP_CARRIL_2	LinMoving	Min T	-2.09	-369.12	0.01	-187.80	-0.08	367.18	1-3	0
1	2	VP_CARRIL_2	LinMoving	Min T	-2.09	-369.12	0.01	-187.80	-0.08	551.66	1-4	0
1	3	VP_CARRIL_2	LinMoving	Min T	-2.40	-354.48	0.00	-182.77	-0.08	883.87	1-5	0
1	4	VP_CARRIL_2	LinMoving	Min T	-2.66	-339.88	0.00	-177.73	-0.08	1186.99	1-6	0
1	5	VP_CARRIL_2	LinMoving	Min T	-2.89	-325.34	0.00	-172.70	-0.07	1461.22	1-7	0
1	6	VP_CARRIL_2	LinMoving	Min T	-3.07	-310.88	0.00	-167.66	-0.06	1706.84	1-8	0
1	7	VP_CARRIL_2	LinMoving	Min T	-3.22	-296.51	0.00	-162.63	-0.05	1924.17	1-9	0
1	8	VP_CARRIL_2	LinMoving	Min T	-3.33	-282.24	0.00	-157.59	-0.03	2113.60	1-10	0
1	9	VP_CARRIL_2	LinMoving	Min T	-3.41	-268.11	-0.01	-152.56	-0.01	2275.59	1-11	0
1	10	VP_CARRIL_2	LinMoving	Min T	-3.46	-254.11	-0.01	-147.52	0.02	2410.65	1-12	0
1	11	VP_CARRIL_2	LinMoving	Min T	-3.48	-240.26	-0.01	-142.49	0.04	2519.37	1-13	0
1	12	VP_CARRIL_2	LinMoving	Min T	-3.47	-226.59	-0.01	-137.45	0.07	2602.36	1-14	0
1	13	VP_CARRIL_2	LinMoving	Min T	-3.44	-213.09	-0.01	-132.42	0.11	2660.35	1-15	0
1	14	VP_CARRIL_2	LinMoving	Min T	-3.38	-199.80	-0.02	-127.38	0.15	2694.08	1-16	0
1	15	VP_CARRIL_2	LinMoving	Min T	-3.30	-186.73	-0.02	-122.35	0.19	2704.39	1-17	0
1	16	VP_CARRIL_2	LinMoving	Min T	-3.19	-173.89	-0.02	-117.31	0.23	2692.15	1-18	0

ESTRUCTURA E1. ESFUERZOS EN TABLERO PARA TODOS LOS CASOS E HIPOTESIS DE CARGA

Frame	Station	OutputCase	CaseType	StepType	P	V2	V3	T	M2	M3	FrameElem	ElemStation
Text	m	Text	Text	Text	KN	KN	KN	KN-m	KN-m	KN-m	Text	m
1	17	VP_CARRIL_2	LinMoving	Min T	-3.07	-161.29	-0.02	-112.28	0.28	2658.32	1-19	0
1	18	VP_CARRIL_2	LinMoving	Min T	-2.94	-148.96	-0.02	-107.24	0.33	2603.90	1-20	0
1	19	VP_CARRIL_2	LinMoving	Min T	-2.79	-136.90	-0.02	-102.21	0.38	2529.97	1-21	0
1	20	VP_CARRIL_2	LinMoving	Min T	-2.62	-125.14	-0.03	-97.17	0.44	2437.66	1-22	0
1	21	VP_CARRIL_2	LinMoving	Min T	-2.45	-113.68	-0.03	-92.14	0.50	2328.16	1-23	0
1	22	VP_CARRIL_2	LinMoving	Min T	-2.26	-102.55	-0.03	-87.10	0.57	2202.73	1-24	0
1	23	VP_CARRIL_2	LinMoving	Min T	-2.07	-91.76	-0.03	-82.07	0.64	2062.68	1-25	0
1	24	VP_CARRIL_2	LinMoving	Min T	-1.88	-81.33	-0.03	-77.03	0.71	1909.40	1-26	0
1	25	VP_CARRIL_2	LinMoving	Min T	-1.68	-71.26	-0.03	-72.00	0.78	1744.33	1-27	0
1	26	VP_CARRIL_2	LinMoving	Min T	-1.47	-61.58	-0.04	-66.96	0.86	1568.97	1-28	0
1	27	VP_CARRIL_2	LinMoving	Min T	-1.27	-52.31	-0.04	-61.93	0.94	1384.88	1-29	0
1	28	VP_CARRIL_2	LinMoving	Min T	-1.07	-43.45	-0.04	-56.89	1.03	1193.70	1-30	0
1	29	VP_CARRIL_2	LinMoving	Min T	-0.88	-35.02	-0.04	-51.85	1.11	997.10	1-31	0
1	30	VP_CARRIL_2	LinMoving	Min T	-0.69	-27.04	-0.04	-46.82	1.21	796.85	1-32	0
1	31	VP_CARRIL_2	LinMoving	Min T	-0.51	-19.52	-0.04	-41.78	1.30	594.76	1-33	0
1	32	VP_CARRIL_2	LinMoving	Min T	-0.33	-12.48	-0.05	-36.81	1.40	392.65	1-34	0
1	33	VP_CARRIL_2	LinMoving	Min T	-0.17	-5.92	-0.05	-32.29	1.49	192.21	1-35	0
1	33.75	VP_CARRIL_2	LinMoving	Min T	-0.03	0.15	-0.05	-29.00	1.54	-5.16	1-36	0
1	34.5	VP_CARRIL_2	LinMoving	Min T	-0.21	-392.81	0.05	-166.95	1.55	-195.64	1-37	0
1	35.25	VP_CARRIL_2	LinMoving	Min T	-0.37	-386.16	0.05	-162.24	1.47	-79.99	1-38	0
1	36	VP_CARRIL_2	LinMoving	Min T	-0.37	-386.16	0.05	-162.24	1.43	209.61	1-39	0
1	37	VP_CARRIL_2	LinMoving	Min T	-0.73	-371.41	0.04	-152.17	1.28	260.04	1-40	0
1	38	VP_CARRIL_2	LinMoving	Min T	-0.92	-363.33	0.04	-147.14	1.18	477.47	1-41	0
1	39	VP_CARRIL_2	LinMoving	Min T	-1.11	-354.82	0.04	-142.10	1.09	691.87	1-42	0
1	40	VP_CARRIL_2	LinMoving	Min T	-1.31	-345.87	0.04	-137.07	1.00	901.46	1-43	0
1	41	VP_CARRIL_2	LinMoving	Min T	-1.51	-336.51	0.04	-132.03	0.92	1104.53	1-44	0
1	42	VP_CARRIL_2	LinMoving	Min T	-1.72	-326.76	0.03	-127.00	0.84	1299.44	1-45	0
1	43	VP_CARRIL_2	LinMoving	Min T	-1.92	-316.61	0.03	-121.96	0.76	1484.59	1-46	0
1	44	VP_CARRIL_2	LinMoving	Min T	-2.11	-306.11	0.03	-116.93	0.69	1658.47	1-47	0
1	45	VP_CARRIL_2	LinMoving	Min T	-2.30	-295.25	0.03	-111.89	0.62	1819.60	1-48	0
1	46	VP_CARRIL_2	LinMoving	Min T	-2.48	-284.05	0.03	-106.86	0.55	1966.59	1-49	0
1	47	VP_CARRIL_2	LinMoving	Min T	-2.66	-272.53	0.02	-101.82	0.48	2098.11	1-50	0
1	48	VP_CARRIL_2	LinMoving	Min T	-2.82	-260.71	0.02	-96.79	0.42	2212.86	1-51	0
1	49	VP_CARRIL_2	LinMoving	Min T	-2.97	-248.60	0.02	-91.75	0.37	2309.64	1-52	0
1	50	VP_CARRIL_2	LinMoving	Min T	-3.10	-236.21	0.02	-86.72	0.31	2387.28	1-53	0
1	51	VP_CARRIL_2	LinMoving	Min T	-3.22	-223.57	0.02	-81.68	0.26	2444.71	1-54	0
1	52	VP_CARRIL_2	LinMoving	Min T	-3.31	-210.67	0.02	-76.65	0.21	2480.88	1-55	0
1	53	VP_CARRIL_2	LinMoving	Min T	-3.39	-197.56	0.01	-71.61	0.17	2494.83	1-56	0
1	54	VP_CARRIL_2	LinMoving	Min T	-3.44	-184.22	0.01	-66.58	0.13	2485.65	1-57	0
1	55	VP_CARRIL_2	LinMoving	Min T	-3.47	-170.70	0.01	-61.54	0.09	2452.50	1-58	0
1	56	VP_CARRIL_2	LinMoving	Min T	-3.48	-156.98	0.01	-56.50	0.06	2394.59	1-59	0
1	57	VP_CARRIL_2	LinMoving	Min T	-3.45	-143.11	0.01	-51.47	0.03	2311.20	1-60	0
1	58	VP_CARRIL_2	LinMoving	Min T	-3.40	-129.08	0.01	-46.43	0.00	2201.68	1-61	0
1	59	VP_CARRIL_2	LinMoving	Min T	-3.31	-114.91	0.00	-41.40	-0.02	2065.41	1-62	0
1	60	VP_CARRIL_2	LinMoving	Min T	-3.19	-100.63	0.00	-36.36	-0.04	1901.87	1-63	0
1	61	VP_CARRIL_2	LinMoving	Min T	-3.04	-86.24	0.00	-31.33	-0.06	1710.58	1-64	0
1	62	VP_CARRIL_2	LinMoving	Min T	-2.84	-71.76	0.00	-26.29	-0.08	1491.13	1-65	0
1	63	VP_CARRIL_2	LinMoving	Min T	-2.61	-57.21	0.00	-21.26	-0.09	1243.17	1-66	0
1	64	VP_CARRIL_2	LinMoving	Min T	-2.34	-42.60	0.00	-16.22	-0.09	966.40	1-67	0
1	65	VP_CARRIL_2	LinMoving	Min T	-2.02	-27.95	-0.01	-11.33	-0.10	660.60	1-68	0
1	66	VP_CARRIL_2	LinMoving	Min T	-1.66	-13.27	-0.01	-7.22	-0.09	325.59	1-69	0
1	67	VP_CARRIL_2	LinMoving	Min T	-0.76	-3.70	0.00	-2.77	-0.04	93.94	1-70	0
1	67.5	VP_CARRIL_2	LinMoving	Min T	-0.76	-3.70	0.00	-2.77	-0.04	95.84	1-71	0
1	68.5	VP_CARRIL_2	LinMoving	Min T	0.00	-200.00	0.00	-100.00	0.00	-99.80	1-72	0
1	0	VP_CARRIL_2	LinMoving	Max M2	0.00	0.00	0.00	0.00	0.00	0.00	1-1	0
1	0.5	VP_CARRIL_2	LinMoving	Max M2	0.00	0.00	0.00	0.00	0.00	0.00	1-2	0
1	1.5	VP_CARRIL_2	LinMoving	Max M2	-0.03	0.15	-0.05	-29.00	0.03	-0.18	1-3	0
1	2	VP_CARRIL_2	LinMoving	Max M2	-0.03	0.15	-0.05	-29.00	0.06	-0.26	1-4	0
1	3	VP_CARRIL_2	LinMoving	Max M2	-0.03	0.15	-0.05	-29.00	0.10	-0.42	1-5	0
1	4	VP_CARRIL_2	LinMoving	Max M2	-0.03	0.15	-0.05	-29.00	0.15	-0.57	1-6	0
1	5	VP_CARRIL_2	LinMoving	Max M2	-0.03	0.15	-0.05	-29.00	0.20	-0.72	1-7	0
1	6	VP_CARRIL_2	LinMoving	Max M2	-0.03	0.15	-0.05	-29.00	0.24	-0.88	1-8	0
1	7	VP_CARRIL_2	LinMoving	Max M2	-0.03	0.15	-0.05	-29.00	0.29	-1.03	1-9	0
1	8	VP_CARRIL_2	LinMoving	Max M2	-0.03	0.15	-0.05	-29.00	0.34	-1.19	1-10	0
1	9	VP_CARRIL_2	LinMoving	Max M2	-0.03	0.15	-0.05	-29.00	0.38	-1.34	1-11	0
1	10	VP_CARRIL_2	LinMoving	Max M2	-0.03	0.15	-0.05	-29.00	0.43	-1.50	1-12	0
1	11	VP_CARRIL_2	LinMoving	Max M2	-0.03	0.15	-0.05	-29.00	0.48	-1.65	1-13	0
1	12	VP_CARRIL_2	LinMoving	Max M2	-0.03	0.15	-0.05	-29.00	0.52	-1.80	1-14	0
1	13	VP_CARRIL_2	LinMoving	Max M2	-0.03	0.15	-0.05	-29.00	0.57	-1.96	1-15	0
1	14	VP_CARRIL_2	LinMoving	Max M2	-0.03	0.15	-0.05	-29.00	0.62	-2.11	1-16	0
1	15	VP_CARRIL_2	LinMoving	Max M2	-0.03	0.15	-0.05	-29.00	0.66	-2.27	1-17	0
1	16	VP_CARRIL_2	LinMoving	Max M2	-0.03	0.15	-0.05	-29.00	0.71	-2.42	1-18	0
1	17	VP_CARRIL_2	LinMoving	Max M2	-0.03	0.15	-0.05	-29.00	0.76	-2.58	1-19	0
1	18	VP_CARRIL_2	LinMoving	Max M2	-0.03	0.15	-0.05	-29.00	0.80	-2.73	1-20	0
1	19	VP_CARRIL_2	LinMoving	Max M2	-0.03	0.15	-0.05	-29.00	0.85	-2.88	1-21	0
1	20	VP_CARRIL_2	LinMoving	Max M2	-0.03	0.15	-0.05	-29.00	0.90	-3.04	1-22	0
1	21	VP_CARRIL_2	LinMoving	Max M2	-0.03	0.15	-0.05	-29.00	0.94	-3.19	1-23	0
1	22	VP_CARRIL_2	LinMoving	Max M2	-0.03	0.15	-0.05	-29.00	0.99	-3.35	1-24	0
1	23	VP_CARRIL_2	LinMoving	Max M2	-0.03	0.15	-0.05	-29.00	1.04	-3.50	1-25	0
1	24	VP_CARRIL_2	LinMoving	Max M2	-0.03	0.15	-0.05	-29.00	1.09	-3.66	1-26	0
1	25	VP_CARRIL_2	LinMoving	Max M2	-0.03	0.15	-0.05	-29.00	1.13	-3.81	1-27	0

ESTRUCTURA E1. ESFUERZOS EN TABLERO PARA TODOS LOS CASOS E HIPOTESIS DE CARGA

Frame	Station	OutputCase	CaseType	StepType	P	V2	V3	T	M2	M3	FrameElem	ElemStation
Text	m	Text	Text	Text	KN	KN	KN	KN-m	KN-m	KN-m	Text	m
1	26	VP_CARRIL_2	LinMoving	Max M2	-0.03	0.15	-0.05	-29.00	1.18	-3.96	1-28	0
1	27	VP_CARRIL_2	LinMoving	Max M2	-0.03	0.15	-0.05	-29.00	1.23	-4.12	1-29	0
1	28	VP_CARRIL_2	LinMoving	Max M2	-0.03	0.15	-0.05	-29.00	1.27	-4.27	1-30	0
1	29	VP_CARRIL_2	LinMoving	Max M2	-0.03	0.15	-0.05	-29.00	1.32	-4.43	1-31	0
1	30	VP_CARRIL_2	LinMoving	Max M2	-0.03	0.15	-0.05	-29.00	1.37	-4.58	1-32	0
1	31	VP_CARRIL_2	LinMoving	Max M2	-0.03	0.15	-0.05	-29.00	1.41	-4.73	1-33	0
1	32	VP_CARRIL_2	LinMoving	Max M2	-0.03	0.15	-0.05	-29.00	1.46	-4.89	1-34	0
1	33	VP_CARRIL_2	LinMoving	Max M2	-0.03	0.15	-0.05	-29.00	1.51	-5.04	1-35	0
1	33.75	VP_CARRIL_2	LinMoving	Max M2	-0.03	0.15	-0.05	-29.00	1.54	-5.16	1-36	0
1	34.5	VP_CARRIL_2	LinMoving	Max M2	-0.03	-200.15	0.05	-71.00	1.58	-105.27	1-37	0
1	35.25	VP_CARRIL_2	LinMoving	Max M2	-0.03	-0.15	0.05	29.00	1.54	-5.16	1-38	0
1	36	VP_CARRIL_2	LinMoving	Max M2	-0.03	-0.15	0.05	29.00	1.51	-5.04	1-39	0
1	37	VP_CARRIL_2	LinMoving	Max M2	-0.03	-0.15	0.05	29.00	1.46	-4.89	1-40	0
1	38	VP_CARRIL_2	LinMoving	Max M2	-0.03	-0.15	0.05	29.00	1.41	-4.73	1-41	0
1	39	VP_CARRIL_2	LinMoving	Max M2	-0.03	-0.15	0.05	29.00	1.37	-4.58	1-42	0
1	40	VP_CARRIL_2	LinMoving	Max M2	-0.03	-0.15	0.05	29.00	1.32	-4.43	1-43	0
1	41	VP_CARRIL_2	LinMoving	Max M2	-0.03	-0.15	0.05	29.00	1.27	-4.27	1-44	0
1	42	VP_CARRIL_2	LinMoving	Max M2	-0.03	-0.15	0.05	29.00	1.23	-4.12	1-45	0
1	43	VP_CARRIL_2	LinMoving	Max M2	-0.03	-0.15	0.05	29.00	1.18	-3.96	1-46	0
1	44	VP_CARRIL_2	LinMoving	Max M2	-0.03	-0.15	0.05	29.00	1.13	-3.81	1-47	0
1	45	VP_CARRIL_2	LinMoving	Max M2	-0.03	-0.15	0.05	29.00	1.09	-3.65	1-48	0
1	46	VP_CARRIL_2	LinMoving	Max M2	-0.03	-0.15	0.05	29.00	1.04	-3.50	1-49	0
1	47	VP_CARRIL_2	LinMoving	Max M2	-0.03	-0.15	0.05	29.00	0.99	-3.35	1-50	0
1	48	VP_CARRIL_2	LinMoving	Max M2	-0.03	-0.15	0.05	29.00	0.94	-3.19	1-51	0
1	49	VP_CARRIL_2	LinMoving	Max M2	-0.03	-0.15	0.05	29.00	0.90	-3.04	1-52	0
1	50	VP_CARRIL_2	LinMoving	Max M2	-0.03	-0.15	0.05	29.00	0.85	-2.88	1-53	0
1	51	VP_CARRIL_2	LinMoving	Max M2	-0.03	-0.15	0.05	29.00	0.80	-2.73	1-54	0
1	52	VP_CARRIL_2	LinMoving	Max M2	-0.03	-0.15	0.05	29.00	0.76	-2.57	1-55	0
1	53	VP_CARRIL_2	LinMoving	Max M2	-0.03	-0.15	0.05	29.00	0.71	-2.42	1-56	0
1	54	VP_CARRIL_2	LinMoving	Max M2	-0.03	-0.15	0.05	29.00	0.66	-2.27	1-57	0
1	55	VP_CARRIL_2	LinMoving	Max M2	-0.03	-0.15	0.05	29.00	0.62	-2.11	1-58	0
1	56	VP_CARRIL_2	LinMoving	Max M2	-0.03	-0.15	0.05	29.00	0.57	-1.96	1-59	0
1	57	VP_CARRIL_2	LinMoving	Max M2	-0.03	-0.15	0.05	29.00	0.52	-1.80	1-60	0
1	58	VP_CARRIL_2	LinMoving	Max M2	-0.03	-0.15	0.05	29.00	0.48	-1.65	1-61	0
1	59	VP_CARRIL_2	LinMoving	Max M2	-0.03	-0.15	0.05	29.00	0.43	-1.50	1-62	0
1	60	VP_CARRIL_2	LinMoving	Max M2	-0.03	-0.15	0.05	29.00	0.38	-1.34	1-63	0
1	61	VP_CARRIL_2	LinMoving	Max M2	-0.03	-0.15	0.05	29.00	0.34	-1.19	1-64	0
1	62	VP_CARRIL_2	LinMoving	Max M2	-0.03	-0.15	0.05	29.00	0.29	-1.03	1-65	0
1	63	VP_CARRIL_2	LinMoving	Max M2	-0.03	-0.15	0.05	29.00	0.24	-0.88	1-66	0
1	64	VP_CARRIL_2	LinMoving	Max M2	-0.03	-0.15	0.05	29.00	0.20	-0.72	1-67	0
1	65	VP_CARRIL_2	LinMoving	Max M2	-0.03	-0.15	0.05	29.00	0.15	-0.57	1-68	0
1	66	VP_CARRIL_2	LinMoving	Max M2	-0.03	-0.15	0.05	29.00	0.10	-0.42	1-69	0
1	67	VP_CARRIL_2	LinMoving	Max M2	-0.03	-0.15	0.05	29.00	0.06	-0.26	1-70	0
1	67.5	VP_CARRIL_2	LinMoving	Max M2	-0.03	-0.15	0.05	29.01	0.03	-0.18	1-71	0
1	68.5	VP_CARRIL_2	LinMoving	Max M2	0.00	0.00	0.00	0.00	0.00	0.00	1-72	0
1	0	VP_CARRIL_2	LinMoving	Min M2	0.00	0.00	0.00	0.00	0.00	0.00	1-1	0
1	0.5	VP_CARRIL_2	LinMoving	Min M2	-1.35	-198.47	0.01	-94.81	-0.08	-100.96	1-2	0
1	1.5	VP_CARRIL_2	LinMoving	Min M2	-1.35	-38.48	0.01	-14.81	-0.09	17.58	1-3	0
1	2	VP_CARRIL_2	LinMoving	Min M2	-1.35	-38.48	0.01	-14.81	-0.09	36.77	1-4	0
1	3	VP_CARRIL_2	LinMoving	Min M2	-1.35	1.53	0.01	5.19	-0.10	35.28	1-5	0
1	4	VP_CARRIL_2	LinMoving	Min M2	-1.35	1.53	0.01	5.19	-0.10	33.75	1-6	0
1	5	VP_CARRIL_2	LinMoving	Min M2	-1.35	1.53	0.01	5.19	-0.11	32.22	1-7	0
1	6	VP_CARRIL_2	LinMoving	Min M2	-1.35	1.53	0.01	5.19	-0.12	30.70	1-8	0
1	7	VP_CARRIL_2	LinMoving	Min M2	-1.35	1.53	0.01	5.19	-0.13	29.17	1-9	0
1	8	VP_CARRIL_2	LinMoving	Min M2	-1.35	1.53	0.01	5.19	-0.14	27.64	1-10	0
1	9	VP_CARRIL_2	LinMoving	Min M2	-1.35	1.53	0.01	5.19	-0.14	26.12	1-11	0
1	10	VP_CARRIL_2	LinMoving	Min M2	-1.35	1.53	0.01	5.19	-0.15	24.59	1-12	0
1	11	VP_CARRIL_2	LinMoving	Min M2	-1.35	1.53	0.01	5.19	-0.16	23.07	1-13	0
1	12	VP_CARRIL_2	LinMoving	Min M2	-1.35	1.53	0.01	5.19	-0.17	21.54	1-14	0
1	13	VP_CARRIL_2	LinMoving	Min M2	-1.35	1.53	0.01	5.19	-0.17	20.01	1-15	0
1	14	VP_CARRIL_2	LinMoving	Min M2	-1.35	1.53	0.01	5.19	-0.18	18.49	1-16	0
1	15	VP_CARRIL_2	LinMoving	Min M2	-1.35	1.53	0.01	5.19	-0.19	16.96	1-17	0
1	16	VP_CARRIL_2	LinMoving	Min M2	-1.35	1.53	0.01	5.19	-0.20	15.43	1-18	0
1	17	VP_CARRIL_2	LinMoving	Min M2	-1.35	1.53	0.01	5.19	-0.20	13.91	1-19	0
1	18	VP_CARRIL_2	LinMoving	Min M2	-1.35	1.53	0.01	5.19	-0.21	12.38	1-20	0
1	19	VP_CARRIL_2	LinMoving	Min M2	-1.35	1.53	0.01	5.19	-0.22	10.85	1-21	0
1	20	VP_CARRIL_2	LinMoving	Min M2	-1.35	1.53	0.01	5.19	-0.23	9.33	1-22	0
1	21	VP_CARRIL_2	LinMoving	Min M2	-1.35	1.53	0.01	5.19	-0.23	7.80	1-23	0
1	22	VP_CARRIL_2	LinMoving	Min M2	-1.35	1.53	0.01	5.19	-0.24	6.28	1-24	0
1	23	VP_CARRIL_2	LinMoving	Min M2	-1.35	1.53	0.01	5.19	-0.25	4.75	1-25	0
1	24	VP_CARRIL_2	LinMoving	Min M2	-1.35	1.53	0.01	5.19	-0.26	3.22	1-26	0
1	25	VP_CARRIL_2	LinMoving	Min M2	-1.35	1.53	0.01	5.19	-0.26	1.70	1-27	0
1	26	VP_CARRIL_2	LinMoving	Min M2	-1.35	1.53	0.01	5.19	-0.27	0.17	1-28	0
1	27	VP_CARRIL_2	LinMoving	Min M2	-1.35	1.53	0.01	5.19	-0.28	-1.36	1-29	0
1	28	VP_CARRIL_2	LinMoving	Min M2	-1.35	1.53	0.01	5.19	-0.29	-2.88	1-30	0
1	29	VP_CARRIL_2	LinMoving	Min M2	-1.35	1.53	0.01	5.19	-0.29	-4.41	1-31	0
1	30	VP_CARRIL_2	LinMoving	Min M2	-1.35	1.53	0.01	5.19	-0.30	-5.94	1-32	0
1	31	VP_CARRIL_2	LinMoving	Min M2	-1.35	1.53	0.01	5.19	-0.31	-7.46	1-33	0
1	32	VP_CARRIL_2	LinMoving	Min M2	-1.35	1.53	0.01	5.19	-0.32	-8.99	1-34	0
1	33	VP_CARRIL_2	LinMoving	Min M2	-1.35	1.53	0.01	5.19	-0.33	-10.46	1-35	0
1	33.75	VP_CARRIL_2	LinMoving	Min M2	-1.35	1.53	0.01	5.19	-0.33	-11.61	1-36	0

ESTRUCTURA E1. ESFUERZOS EN TABLERO PARA TODOS LOS CASOS E HIPOTESIS DE CARGA

Frame	Station	OutputCase	CaseType	StepType	P	V2	V3	T	M2	M3	FrameElem	ElemStation
Text	m	Text	Text	Text	KN	KN	KN	KN-m	KN-m	KN-m	Text	m
1	34.5	VP_CARRIL_2	LinMoving	Min M2	-1.35	-1.53	-0.01	-5.19	-0.34	-12.75	1-37	0
1	35.25	VP_CARRIL_2	LinMoving	Min M2	-1.35	-1.53	-0.01	-5.19	-0.33	-11.51	1-38	0
1	36	VP_CARRIL_2	LinMoving	Min M2	-1.35	-1.53	-0.01	-5.19	-0.33	-10.51	1-39	0
1	37	VP_CARRIL_2	LinMoving	Min M2	-1.35	-1.53	-0.01	-5.19	-0.32	-8.99	1-40	0
1	38	VP_CARRIL_2	LinMoving	Min M2	-1.35	-1.53	-0.01	-5.19	-0.31	-7.46	1-41	0
1	39	VP_CARRIL_2	LinMoving	Min M2	-1.35	-1.53	-0.01	-5.19	-0.30	-5.94	1-42	0
1	40	VP_CARRIL_2	LinMoving	Min M2	-1.35	-1.53	-0.01	-5.19	-0.30	-4.41	1-43	0
1	41	VP_CARRIL_2	LinMoving	Min M2	-1.35	-1.53	-0.01	-5.19	-0.29	-2.88	1-44	0
1	42	VP_CARRIL_2	LinMoving	Min M2	-1.35	-1.53	-0.01	-5.19	-0.28	-1.36	1-45	0
1	43	VP_CARRIL_2	LinMoving	Min M2	-1.35	-1.53	-0.01	-5.19	-0.27	0.17	1-46	0
1	44	VP_CARRIL_2	LinMoving	Min M2	-1.35	-1.53	-0.01	-5.19	-0.27	1.70	1-47	0
1	45	VP_CARRIL_2	LinMoving	Min M2	-1.35	-1.53	-0.01	-5.19	-0.26	3.22	1-48	0
1	46	VP_CARRIL_2	LinMoving	Min M2	-1.35	-1.53	-0.01	-5.19	-0.25	4.75	1-49	0
1	47	VP_CARRIL_2	LinMoving	Min M2	-1.35	-1.53	-0.01	-5.19	-0.24	6.28	1-50	0
1	48	VP_CARRIL_2	LinMoving	Min M2	-1.35	-1.53	-0.01	-5.19	-0.23	7.80	1-51	0
1	49	VP_CARRIL_2	LinMoving	Min M2	-1.35	-1.53	-0.01	-5.19	-0.23	9.33	1-52	0
1	50	VP_CARRIL_2	LinMoving	Min M2	-1.35	-1.53	-0.01	-5.19	-0.22	10.86	1-53	0
1	51	VP_CARRIL_2	LinMoving	Min M2	-1.35	-1.53	-0.01	-5.19	-0.21	12.38	1-54	0
1	52	VP_CARRIL_2	LinMoving	Min M2	-1.35	-1.53	-0.01	-5.19	-0.20	13.91	1-55	0
1	53	VP_CARRIL_2	LinMoving	Min M2	-1.35	-1.53	-0.01	-5.19	-0.20	15.43	1-56	0
1	54	VP_CARRIL_2	LinMoving	Min M2	-1.35	-1.53	-0.01	-5.19	-0.19	16.96	1-57	0
1	55	VP_CARRIL_2	LinMoving	Min M2	-1.35	-1.53	-0.01	-5.19	-0.18	18.49	1-58	0
1	56	VP_CARRIL_2	LinMoving	Min M2	-1.35	-1.53	-0.01	-5.19	-0.17	20.01	1-59	0
1	57	VP_CARRIL_2	LinMoving	Min M2	-1.35	-1.53	-0.01	-5.19	-0.17	21.54	1-60	0
1	58	VP_CARRIL_2	LinMoving	Min M2	-1.35	-1.53	-0.01	-5.19	-0.16	23.07	1-61	0
1	59	VP_CARRIL_2	LinMoving	Min M2	-1.35	-1.53	-0.01	-5.19	-0.15	24.59	1-62	0
1	60	VP_CARRIL_2	LinMoving	Min M2	-1.35	-1.53	-0.01	-5.19	-0.14	26.12	1-63	0
1	61	VP_CARRIL_2	LinMoving	Min M2	-1.35	-1.53	-0.01	-5.19	-0.14	27.65	1-64	0
1	62	VP_CARRIL_2	LinMoving	Min M2	-1.35	-1.53	-0.01	-5.19	-0.13	29.17	1-65	0
1	63	VP_CARRIL_2	LinMoving	Min M2	-1.35	-1.53	-0.01	-5.19	-0.12	30.70	1-66	0
1	64	VP_CARRIL_2	LinMoving	Min M2	-1.35	-1.53	-0.01	-5.19	-0.11	32.22	1-67	0
1	65	VP_CARRIL_2	LinMoving	Min M2	-1.35	-1.53	-0.01	-5.19	-0.10	33.75	1-68	0
1	66	VP_CARRIL_2	LinMoving	Min M2	-1.35	-1.53	-0.01	-5.19	-0.10	35.28	1-69	0
1	67	VP_CARRIL_2	LinMoving	Min M2	-1.35	38.48	-0.01	14.81	-0.09	36.82	1-70	0
1	67.5	VP_CARRIL_2	LinMoving	Min M2	-1.35	38.48	-0.01	14.81	-0.09	17.67	1-71	0
1	68.5	VP_CARRIL_2	LinMoving	Min M2	0.00	0.00	0.00	0.00	0.00	0.00	1-72	0
1	0	VP_CARRIL_2	LinMoving	Max M3	0.00	0.00	0.00	0.00	0.00	0.00	1-1	0
1	0.5	VP_CARRIL_2	LinMoving	Max M3	0.31	23.34	-0.04	-24.11	-0.01	0.27	1-2	0
1	1.5	VP_CARRIL_2	LinMoving	Max M3	-2.09	-369.12	0.01	-187.80	-0.08	367.18	1-3	0
1	2	VP_CARRIL_2	LinMoving	Max M3	-2.09	-369.12	0.01	-187.80	-0.08	551.66	1-4	0
1	3	VP_CARRIL_2	LinMoving	Max M3	-2.40	-354.48	0.00	-182.77	-0.08	883.87	1-5	0
1	4	VP_CARRIL_2	LinMoving	Max M3	-2.66	-339.88	0.00	-177.73	-0.08	1186.99	1-6	0
1	5	VP_CARRIL_2	LinMoving	Max M3	-2.89	-325.34	0.00	-172.70	-0.07	1461.22	1-7	0
1	6	VP_CARRIL_2	LinMoving	Max M3	-3.07	-310.88	0.00	-167.66	-0.06	1706.84	1-8	0
1	7	VP_CARRIL_2	LinMoving	Max M3	-3.22	-296.51	0.00	-162.63	-0.05	1924.17	1-9	0
1	8	VP_CARRIL_2	LinMoving	Max M3	-3.33	-282.24	0.00	-157.59	-0.03	2113.60	1-10	0
1	9	VP_CARRIL_2	LinMoving	Max M3	-3.41	-268.11	-0.01	-152.56	-0.01	2275.59	1-11	0
1	10	VP_CARRIL_2	LinMoving	Max M3	-3.46	-254.11	-0.01	-147.52	0.02	2410.65	1-12	0
1	11	VP_CARRIL_2	LinMoving	Max M3	-3.48	-240.26	-0.01	-142.49	0.04	2519.37	1-13	0
1	12	VP_CARRIL_2	LinMoving	Max M3	-3.47	-226.59	-0.01	-137.45	0.07	2602.36	1-14	0
1	13	VP_CARRIL_2	LinMoving	Max M3	-3.44	-213.09	-0.01	-132.42	0.11	2660.35	1-15	0
1	14	VP_CARRIL_2	LinMoving	Max M3	-3.38	-199.80	-0.02	-127.38	0.15	2694.08	1-16	0
1	15	VP_CARRIL_2	LinMoving	Max M3	-3.30	-186.73	-0.02	-122.35	0.19	2704.39	1-17	0
1	16	VP_CARRIL_2	LinMoving	Max M3	-3.19	-173.89	-0.02	-117.31	0.23	2692.15	1-18	0
1	17	VP_CARRIL_2	LinMoving	Max M3	-3.22	23.57	-0.02	-18.32	0.24	2668.17	1-19	0
1	18	VP_CARRIL_2	LinMoving	Max M3	-3.10	36.21	-0.02	-13.28	0.29	2623.40	1-20	0
1	19	VP_CARRIL_2	LinMoving	Max M3	-2.97	48.60	-0.02	-8.25	0.35	2558.14	1-21	0
1	20	VP_CARRIL_2	LinMoving	Max M3	-2.82	60.71	-0.02	-3.21	0.40	2473.49	1-22	0
1	21	VP_CARRIL_2	LinMoving	Max M3	-2.66	72.53	-0.02	1.82	0.46	2370.56	1-23	0
1	22	VP_CARRIL_2	LinMoving	Max M3	-2.48	84.05	-0.03	6.86	0.52	2250.57	1-24	0
1	23	VP_CARRIL_2	LinMoving	Max M3	-2.30	95.25	-0.03	11.89	0.59	2114.78	1-25	0
1	24	VP_CARRIL_2	LinMoving	Max M3	-2.11	106.11	-0.03	16.93	0.66	1964.51	1-26	0
1	25	VP_CARRIL_2	LinMoving	Max M3	-1.92	116.61	-0.03	21.96	0.73	1801.15	1-27	0
1	26	VP_CARRIL_2	LinMoving	Max M3	-1.72	126.76	-0.03	27.00	0.81	1626.14	1-28	0
1	27	VP_CARRIL_2	LinMoving	Max M3	-1.51	136.51	-0.04	32.03	0.89	1441.00	1-29	0
1	28	VP_CARRIL_2	LinMoving	Max M3	-1.31	145.87	-0.04	37.07	0.97	1247.29	1-30	0
1	29	VP_CARRIL_2	LinMoving	Max M3	-1.11	154.82	-0.04	42.10	1.05	1046.65	1-31	0
1	30	VP_CARRIL_2	LinMoving	Max M3	-0.92	163.33	-0.04	47.14	1.14	840.78	1-32	0
1	31	VP_CARRIL_2	LinMoving	Max M3	-0.73	171.41	-0.04	52.17	1.24	631.42	1-33	0
1	32	VP_CARRIL_2	LinMoving	Max M3	-0.54	379.02	-0.04	157.21	1.33	420.42	1-34	0
1	33	VP_CARRIL_2	LinMoving	Max M3	-0.37	386.16	-0.05	162.24	1.43	209.63	1-35	0
1	33.75	VP_CARRIL_2	LinMoving	Max M3	-0.06	-1.66	-0.02	-15.18	0.77	55.27	1-36	0
1	34.5	VP_CARRIL_2	LinMoving	Max M3	-0.40	0.71	0.00	0.34	-0.17	23.62	1-37	0
1	35.25	VP_CARRIL_2	LinMoving	Max M3	-0.06	1.66	0.02	15.18	0.77	55.27	1-38	0
1	36	VP_CARRIL_2	LinMoving	Max M3	-0.37	-186.16	0.05	-62.24	1.43	209.61	1-39	0
1	37	VP_CARRIL_2	LinMoving	Max M3	-0.54	-179.02	0.04	-57.21	1.33	420.41	1-40	0
1	38	VP_CARRIL_2	LinMoving	Max M3	-0.73	-171.41	0.04	-52.17	1.24	631.42	1-41	0
1	39	VP_CARRIL_2	LinMoving	Max M3	-0.92	-163.33	0.04	-47.14	1.14	840.78	1-42	0
1	40	VP_CARRIL_2	LinMoving	Max M3	-1.11	-154.82	0.04	-42.10	1.05	1046.65	1-43	0
1	41	VP_CARRIL_2	LinMoving	Max M3	-1.31	-145.87	0.04	-37.07	0.97	1247.29	1-44	0
1	42	VP_CARRIL_2	LinMoving	Max M3	-1.51	-136.51	0.04	-32.03	0.89	1441.00	1-45	0

ESTRUCTURA E1. ESFUERZOS EN TABLERO PARA TODOS LOS CASOS E HIPOTESIS DE CARGA

Frame	Station	OutputCase	CaseType	StepType	P	V2	V3	T	M2	M3	FrameElem	ElemStation
Text	m	Text	Text	Text	KN	KN	KN	KN-m	KN-m	KN-m	Text	m
1	43	VP_CARRIL_2	LinMoving	Max M3	-1.72	-126.76	0.03	-27.00	0.81	1626.14	1-46	0
1	44	VP_CARRIL_2	LinMoving	Max M3	-1.92	-116.61	0.03	-21.96	0.73	1801.15	1-47	0
1	45	VP_CARRIL_2	LinMoving	Max M3	-2.11	-106.11	0.03	-16.93	0.66	1964.51	1-48	0
1	46	VP_CARRIL_2	LinMoving	Max M3	-2.30	-95.25	0.03	-11.89	0.59	2114.78	1-49	0
1	47	VP_CARRIL_2	LinMoving	Max M3	-2.48	-84.05	0.03	-6.86	0.52	2250.57	1-50	0
1	48	VP_CARRIL_2	LinMoving	Max M3	-2.66	-72.53	0.02	-1.82	0.46	2370.56	1-51	0
1	49	VP_CARRIL_2	LinMoving	Max M3	-2.82	-60.71	0.02	3.21	0.40	2473.49	1-52	0
1	50	VP_CARRIL_2	LinMoving	Max M3	-2.97	-48.60	0.02	8.25	0.34	2558.14	1-53	0
1	51	VP_CARRIL_2	LinMoving	Max M3	-3.10	-36.21	0.02	13.28	0.29	2623.40	1-54	0
1	52	VP_CARRIL_2	LinMoving	Max M3	-3.22	-23.57	0.02	18.32	0.24	2668.17	1-55	0
1	53	VP_CARRIL_2	LinMoving	Max M3	-3.19	173.89	0.02	117.31	0.23	2692.15	1-56	0
1	54	VP_CARRIL_2	LinMoving	Max M3	-3.30	186.73	0.02	122.35	0.19	2704.39	1-57	0
1	55	VP_CARRIL_2	LinMoving	Max M3	-3.38	199.80	0.02	127.38	0.15	2694.08	1-58	0
1	56	VP_CARRIL_2	LinMoving	Max M3	-3.44	213.09	0.01	132.42	0.11	2660.35	1-59	0
1	57	VP_CARRIL_2	LinMoving	Max M3	-3.47	226.59	0.01	137.45	0.07	2602.36	1-60	0
1	58	VP_CARRIL_2	LinMoving	Max M3	-3.48	240.26	0.01	142.49	0.04	2519.37	1-61	0
1	59	VP_CARRIL_2	LinMoving	Max M3	-3.46	254.11	0.01	147.52	0.02	2410.66	1-62	0
1	60	VP_CARRIL_2	LinMoving	Max M3	-3.41	268.11	0.01	152.56	-0.01	2275.59	1-63	0
1	61	VP_CARRIL_2	LinMoving	Max M3	-3.33	282.24	0.00	157.59	-0.03	2113.60	1-64	0
1	62	VP_CARRIL_2	LinMoving	Max M3	-3.22	296.51	0.00	162.63	-0.05	1924.17	1-65	0
1	63	VP_CARRIL_2	LinMoving	Max M3	-3.07	310.88	0.00	167.66	-0.06	1706.84	1-66	0
1	64	VP_CARRIL_2	LinMoving	Max M3	-2.89	325.34	0.00	172.70	-0.07	1461.22	1-67	0
1	65	VP_CARRIL_2	LinMoving	Max M3	-2.66	339.88	0.00	177.73	-0.08	1186.99	1-68	0
1	66	VP_CARRIL_2	LinMoving	Max M3	-2.40	354.48	0.00	182.77	-0.08	883.87	1-69	0
1	67	VP_CARRIL_2	LinMoving	Max M3	-2.09	369.12	-0.01	187.80	-0.08	551.74	1-70	0
1	67.5	VP_CARRIL_2	LinMoving	Max M3	-2.09	369.12	-0.01	187.80	-0.08	367.32	1-71	0
1	68.5	VP_CARRIL_2	LinMoving	Max M3	0.00	0.00	0.00	0.00	0.00	0.00	1-72	0
1	0	VP_CARRIL_2	LinMoving	Min M3	0.00	0.00	0.00	0.00	0.00	0.00	1-1	0
1	0.5	VP_CARRIL_2	LinMoving	Min M3	-1.35	-198.47	0.01	-94.81	-0.08	-100.96	1-2	0
1	1.5	VP_CARRIL_2	LinMoving	Min M3	-0.55	-3.64	0.00	2.06	-0.04	-96.58	1-3	0
1	2	VP_CARRIL_2	LinMoving	Min M3	-0.55	-3.64	0.00	2.06	-0.05	-94.88	1-4	0
1	3	VP_CARRIL_2	LinMoving	Min M3	-0.34	38.39	-0.02	-16.03	0.04	-96.30	1-5	0
1	4	VP_CARRIL_2	LinMoving	Min M3	-0.34	38.39	-0.02	-16.03	0.07	-134.70	1-6	0
1	5	VP_CARRIL_2	LinMoving	Min M3	-0.25	38.42	-0.02	-16.69	0.09	-173.11	1-7	0
1	6	VP_CARRIL_2	LinMoving	Min M3	-0.25	38.42	-0.02	-16.69	0.12	-211.52	1-8	0
1	7	VP_CARRIL_2	LinMoving	Min M3	-0.25	38.42	-0.02	-16.69	0.14	-249.94	1-9	0
1	8	VP_CARRIL_2	LinMoving	Min M3	-0.25	38.42	-0.02	-16.69	0.17	-288.35	1-10	0
1	9	VP_CARRIL_2	LinMoving	Min M3	-0.25	38.42	-0.02	-16.69	0.19	-326.77	1-11	0
1	10	VP_CARRIL_2	LinMoving	Min M3	-0.25	38.42	-0.02	-16.69	0.21	-365.18	1-12	0
1	11	VP_CARRIL_2	LinMoving	Min M3	-0.25	38.42	-0.02	-16.69	0.24	-403.60	1-13	0
1	12	VP_CARRIL_2	LinMoving	Min M3	-0.25	38.42	-0.02	-16.69	0.26	-442.01	1-14	0
1	13	VP_CARRIL_2	LinMoving	Min M3	-0.25	38.42	-0.02	-16.69	0.28	-480.43	1-15	0
1	14	VP_CARRIL_2	LinMoving	Min M3	-0.25	38.42	-0.02	-16.69	0.31	-518.85	1-16	0
1	15	VP_CARRIL_2	LinMoving	Min M3	-0.25	38.42	-0.02	-16.69	0.33	-557.26	1-17	0
1	16	VP_CARRIL_2	LinMoving	Min M3	-0.25	38.42	-0.02	-16.69	0.35	-595.68	1-18	0
1	17	VP_CARRIL_2	LinMoving	Min M3	-0.25	38.42	-0.02	-16.69	0.38	-634.09	1-19	0
1	18	VP_CARRIL_2	LinMoving	Min M3	-0.25	38.42	-0.02	-16.69	0.40	-672.51	1-20	0
1	19	VP_CARRIL_2	LinMoving	Min M3	-0.25	38.42	-0.02	-16.69	0.42	-710.92	1-21	0
1	20	VP_CARRIL_2	LinMoving	Min M3	-0.25	38.42	-0.02	-16.69	0.45	-749.34	1-22	0
1	21	VP_CARRIL_2	LinMoving	Min M3	-0.25	38.42	-0.02	-16.69	0.47	-787.75	1-23	0
1	22	VP_CARRIL_2	LinMoving	Min M3	-0.25	38.42	-0.02	-16.69	0.50	-826.17	1-24	0
1	23	VP_CARRIL_2	LinMoving	Min M3	-0.25	38.42	-0.02	-16.69	0.52	-864.58	1-25	0
1	24	VP_CARRIL_2	LinMoving	Min M3	-0.25	38.42	-0.02	-16.69	0.54	-903.00	1-26	0
1	25	VP_CARRIL_2	LinMoving	Min M3	-0.25	38.42	-0.02	-16.69	0.57	-941.41	1-27	0
1	26	VP_CARRIL_2	LinMoving	Min M3	-0.25	38.42	-0.02	-16.69	0.59	-979.83	1-28	0
1	27	VP_CARRIL_2	LinMoving	Min M3	-0.25	38.42	-0.02	-16.69	0.61	-1018.24	1-29	0
1	28	VP_CARRIL_2	LinMoving	Min M3	-0.25	38.42	-0.02	-16.69	0.64	-1056.66	1-30	0
1	29	VP_CARRIL_2	LinMoving	Min M3	-0.25	38.42	-0.02	-16.69	0.66	-1095.07	1-31	0
1	30	VP_CARRIL_2	LinMoving	Min M3	-0.25	38.42	-0.02	-16.69	0.68	-1133.49	1-32	0
1	31	VP_CARRIL_2	LinMoving	Min M3	-0.25	38.42	-0.02	-16.69	0.71	-1171.90	1-33	0
1	32	VP_CARRIL_2	LinMoving	Min M3	-0.25	38.42	-0.02	-16.69	0.73	-1210.32	1-34	0
1	33	VP_CARRIL_2	LinMoving	Min M3	-0.25	38.42	-0.02	-16.69	0.75	-1248.72	1-35	0
1	33.75	VP_CARRIL_2	LinMoving	Min M3	-0.25	38.42	-0.02	-16.69	0.77	-1277.53	1-36	0
1	34.5	VP_CARRIL_2	LinMoving	Min M3	-2.66	-272.53	0.02	-101.82	0.79	-1308.47	1-37	0
1	35.25	VP_CARRIL_2	LinMoving	Min M3	-0.25	-38.42	0.02	16.69	0.77	-1277.53	1-38	0
1	36	VP_CARRIL_2	LinMoving	Min M3	-0.25	-38.42	0.02	16.69	0.76	-1248.73	1-39	0
1	37	VP_CARRIL_2	LinMoving	Min M3	-0.25	-38.42	0.02	16.69	0.73	-1210.32	1-40	0
1	38	VP_CARRIL_2	LinMoving	Min M3	-0.25	-38.42	0.02	16.69	0.71	-1171.90	1-41	0
1	39	VP_CARRIL_2	LinMoving	Min M3	-0.25	-38.42	0.02	16.69	0.68	-1133.49	1-42	0
1	40	VP_CARRIL_2	LinMoving	Min M3	-0.25	-38.42	0.02	16.69	0.66	-1095.07	1-43	0
1	41	VP_CARRIL_2	LinMoving	Min M3	-0.25	-38.42	0.02	16.69	0.64	-1056.66	1-44	0
1	42	VP_CARRIL_2	LinMoving	Min M3	-0.25	-38.42	0.02	16.69	0.61	-1018.24	1-45	0
1	43	VP_CARRIL_2	LinMoving	Min M3	-0.25	-38.42	0.02	16.69	0.59	-979.83	1-46	0
1	44	VP_CARRIL_2	LinMoving	Min M3	-0.25	-38.42	0.02	16.69	0.57	-941.41	1-47	0
1	45	VP_CARRIL_2	LinMoving	Min M3	-0.25	-38.42	0.02	16.69	0.54	-903.00	1-48	0
1	46	VP_CARRIL_2	LinMoving	Min M3	-0.25	-38.42	0.02	16.69	0.52	-864.58	1-49	0
1	47	VP_CARRIL_2	LinMoving	Min M3	-0.25	-38.42	0.02	16.69	0.50	-826.17	1-50	0
1	48	VP_CARRIL_2	LinMoving	Min M3	-0.25	-38.42	0.02	16.69	0.47	-787.75	1-51	0
1	49	VP_CARRIL_2	LinMoving	Min M3	-0.25	-38.42	0.02	16.69	0.45	-749.34	1-52	0
1	50	VP_CARRIL_2	LinMoving	Min M3	-0.25	-38.42	0.02	16.69	0.42	-710.92	1-53	0
1	51	VP_CARRIL_2	LinMoving	Min M3	-0.25	-38.42	0.02	16.69	0.40	-672.51	1-54	0

ESTRUCTURA E1. ESFUERZOS EN TABLERO PARA TODOS LOS CASOS E HIPOTESIS DE CARGA

Frame	Station	OutputCase	CaseType	StepType	P	V2	V3	T	M2	M3	FrameElem	ElemStation
Text	m	Text	Text	Text	KN	KN	KN	KN-m	KN-m	KN-m	Text	m
1	52	VP_CARRIL_2	LinMoving	Min M3	-0.25	-38.42	0.02	16.69	0.38	-634.09	1-55	0
1	53	VP_CARRIL_2	LinMoving	Min M3	-0.25	-38.42	0.02	16.69	0.35	-595.68	1-56	0
1	54	VP_CARRIL_2	LinMoving	Min M3	-0.25	-38.42	0.02	16.69	0.33	-557.26	1-57	0
1	55	VP_CARRIL_2	LinMoving	Min M3	-0.25	-38.42	0.02	16.69	0.31	-518.85	1-58	0
1	56	VP_CARRIL_2	LinMoving	Min M3	-0.25	-38.42	0.02	16.69	0.28	-480.43	1-59	0
1	57	VP_CARRIL_2	LinMoving	Min M3	-0.25	-38.42	0.02	16.69	0.26	-442.01	1-60	0
1	58	VP_CARRIL_2	LinMoving	Min M3	-0.25	-38.42	0.02	16.69	0.24	-403.60	1-61	0
1	59	VP_CARRIL_2	LinMoving	Min M3	-0.25	-38.42	0.02	16.69	0.21	-365.18	1-62	0
1	60	VP_CARRIL_2	LinMoving	Min M3	-0.25	-38.42	0.02	16.69	0.19	-326.77	1-63	0
1	61	VP_CARRIL_2	LinMoving	Min M3	-0.25	-38.42	0.02	16.69	0.17	-288.35	1-64	0
1	62	VP_CARRIL_2	LinMoving	Min M3	-0.25	-38.42	0.02	16.69	0.14	-249.94	1-65	0
1	63	VP_CARRIL_2	LinMoving	Min M3	-0.25	-38.42	0.02	16.69	0.12	-211.52	1-66	0
1	64	VP_CARRIL_2	LinMoving	Min M3	-0.25	-38.42	0.02	16.69	0.09	-173.11	1-67	0
1	65	VP_CARRIL_2	LinMoving	Min M3	-0.34	-38.39	0.02	16.03	0.07	-134.70	1-68	0
1	66	VP_CARRIL_2	LinMoving	Min M3	-0.34	-38.39	0.02	16.03	0.04	-96.30	1-69	0
1	67	VP_CARRIL_2	LinMoving	Min M3	-0.55	3.64	0.00	-2.06	-0.05	-94.85	1-70	0
1	67.5	VP_CARRIL_2	LinMoving	Min M3	-0.55	3.64	0.00	-2.06	-0.04	-96.54	1-71	0
1	68.5	VP_CARRIL_2	LinMoving	Min M3	0.00	-200.00	0.00	-100.00	0.00	-99.80	1-72	0
1	0	SC_CARRIL_REM	LinMoving	Max P	0.00	0.00	0.00	0.00	0.00	0.00	1-1	0
1	0.5	SC_CARRIL_REM	LinMoving	Max P	0.03	3.38	-0.03	-19.86	-0.01	0.03	1-2	0
1	1.5	SC_CARRIL_REM	LinMoving	Max P	0.03	3.38	-0.03	-19.85	0.02	-3.36	1-3	0
1	2	SC_CARRIL_REM	LinMoving	Max P	0.03	3.38	-0.03	-19.85	0.04	-5.05	1-4	0
1	3	SC_CARRIL_REM	LinMoving	Max P	0.03	3.38	-0.03	-19.85	0.07	-8.43	1-5	0
1	4	SC_CARRIL_REM	LinMoving	Max P	0.03	3.38	-0.03	-19.85	0.10	-11.82	1-6	0
1	5	SC_CARRIL_REM	LinMoving	Max P	0.03	3.38	-0.03	-19.85	0.13	-15.20	1-7	0
1	6	SC_CARRIL_REM	LinMoving	Max P	0.03	3.38	-0.03	-19.85	0.16	-18.58	1-8	0
1	7	SC_CARRIL_REM	LinMoving	Max P	0.03	3.38	-0.03	-19.85	0.20	-21.97	1-9	0
1	8	SC_CARRIL_REM	LinMoving	Max P	0.03	3.38	-0.03	-19.85	0.23	-25.35	1-10	0
1	9	SC_CARRIL_REM	LinMoving	Max P	0.03	3.38	-0.03	-19.85	0.26	-28.74	1-11	0
1	10	SC_CARRIL_REM	LinMoving	Max P	0.03	3.38	-0.03	-19.85	0.29	-32.12	1-12	0
1	11	SC_CARRIL_REM	LinMoving	Max P	0.03	3.38	-0.03	-19.85	0.33	-35.50	1-13	0
1	12	SC_CARRIL_REM	LinMoving	Max P	0.03	3.38	-0.03	-19.85	0.36	-38.89	1-14	0
1	13	SC_CARRIL_REM	LinMoving	Max P	0.03	3.38	-0.03	-19.85	0.39	-42.27	1-15	0
1	14	SC_CARRIL_REM	LinMoving	Max P	0.03	3.38	-0.03	-19.85	0.42	-45.66	1-16	0
1	15	SC_CARRIL_REM	LinMoving	Max P	0.03	3.38	-0.03	-19.85	0.45	-49.04	1-17	0
1	16	SC_CARRIL_REM	LinMoving	Max P	0.03	3.38	-0.03	-19.85	0.49	-52.42	1-18	0
1	17	SC_CARRIL_REM	LinMoving	Max P	0.03	3.38	-0.03	-19.85	0.52	-55.81	1-19	0
1	18	SC_CARRIL_REM	LinMoving	Max P	0.03	3.38	-0.03	-19.85	0.55	-59.19	1-20	0
1	19	SC_CARRIL_REM	LinMoving	Max P	0.03	3.38	-0.03	-19.85	0.58	-62.58	1-21	0
1	20	SC_CARRIL_REM	LinMoving	Max P	0.03	3.38	-0.03	-19.85	0.61	-65.96	1-22	0
1	21	SC_CARRIL_REM	LinMoving	Max P	0.03	3.38	-0.03	-19.85	0.65	-69.34	1-23	0
1	22	SC_CARRIL_REM	LinMoving	Max P	0.03	3.38	-0.03	-19.85	0.68	-72.73	1-24	0
1	23	SC_CARRIL_REM	LinMoving	Max P	0.03	3.38	-0.03	-19.85	0.71	-76.11	1-25	0
1	24	SC_CARRIL_REM	LinMoving	Max P	0.03	3.38	-0.03	-19.85	0.74	-79.50	1-26	0
1	25	SC_CARRIL_REM	LinMoving	Max P	0.03	3.38	-0.03	-19.85	0.77	-82.88	1-27	0
1	26	SC_CARRIL_REM	LinMoving	Max P	0.03	3.38	-0.03	-19.85	0.81	-86.26	1-28	0
1	27	SC_CARRIL_REM	LinMoving	Max P	0.03	3.38	-0.03	-19.85	0.84	-89.65	1-29	0
1	28	SC_CARRIL_REM	LinMoving	Max P	0.03	3.38	-0.03	-19.85	0.87	-93.03	1-30	0
1	29	SC_CARRIL_REM	LinMoving	Max P	0.03	3.38	-0.03	-19.85	0.90	-96.42	1-31	0
1	30	SC_CARRIL_REM	LinMoving	Max P	0.03	3.38	-0.03	-19.85	0.93	-99.80	1-32	0
1	31	SC_CARRIL_REM	LinMoving	Max P	0.03	3.38	-0.03	-19.85	0.97	-103.18	1-33	0
1	32	SC_CARRIL_REM	LinMoving	Max P	0.03	3.38	-0.03	-19.85	1.00	-106.57	1-34	0
1	33	SC_CARRIL_REM	LinMoving	Max P	0.03	3.38	-0.03	-19.85	1.03	-109.95	1-35	0
1	33.75	SC_CARRIL_REM	LinMoving	Max P	0.03	3.38	-0.03	-19.85	1.05	-112.49	1-36	0
1	34.5	SC_CARRIL_REM	LinMoving	Max P	0.03	-3.48	0.03	19.57	1.08	-115.08	1-37	0
1	35.25	SC_CARRIL_REM	LinMoving	Max P	0.03	-3.38	0.03	19.85	1.05	-112.49	1-38	0
1	36	SC_CARRIL_REM	LinMoving	Max P	0.03	-3.38	0.03	19.85	1.03	-109.95	1-39	0
1	37	SC_CARRIL_REM	LinMoving	Max P	0.03	-3.38	0.03	19.85	1.00	-106.57	1-40	0
1	38	SC_CARRIL_REM	LinMoving	Max P	0.03	-3.38	0.03	19.85	0.97	-103.18	1-41	0
1	39	SC_CARRIL_REM	LinMoving	Max P	0.03	-3.38	0.03	19.85	0.93	-99.80	1-42	0
1	40	SC_CARRIL_REM	LinMoving	Max P	0.03	-3.38	0.03	19.85	0.90	-96.42	1-43	0
1	41	SC_CARRIL_REM	LinMoving	Max P	0.03	-3.38	0.03	19.85	0.87	-93.03	1-44	0
1	42	SC_CARRIL_REM	LinMoving	Max P	0.03	-3.38	0.03	19.85	0.84	-89.65	1-45	0
1	43	SC_CARRIL_REM	LinMoving	Max P	0.03	-3.38	0.03	19.85	0.81	-86.26	1-46	0
1	44	SC_CARRIL_REM	LinMoving	Max P	0.03	-3.38	0.03	19.85	0.77	-82.88	1-47	0
1	45	SC_CARRIL_REM	LinMoving	Max P	0.03	-3.38	0.03	19.85	0.74	-79.50	1-48	0
1	46	SC_CARRIL_REM	LinMoving	Max P	0.03	-3.38	0.03	19.85	0.71	-76.11	1-49	0
1	47	SC_CARRIL_REM	LinMoving	Max P	0.03	-3.38	0.03	19.85	0.68	-72.73	1-50	0
1	48	SC_CARRIL_REM	LinMoving	Max P	0.03	-3.38	0.03	19.85	0.65	-69.34	1-51	0
1	49	SC_CARRIL_REM	LinMoving	Max P	0.03	-3.38	0.03	19.85	0.61	-65.96	1-52	0
1	50	SC_CARRIL_REM	LinMoving	Max P	0.03	-3.38	0.03	19.85	0.58	-62.58	1-53	0
1	51	SC_CARRIL_REM	LinMoving	Max P	0.03	-3.38	0.03	19.85	0.55	-59.19	1-54	0
1	52	SC_CARRIL_REM	LinMoving	Max P	0.03	-3.38	0.03	19.85	0.52	-55.81	1-55	0
1	53	SC_CARRIL_REM	LinMoving	Max P	0.03	-3.38	0.03	19.85	0.49	-52.42	1-56	0
1	54	SC_CARRIL_REM	LinMoving	Max P	0.03	-3.38	0.03	19.85	0.45	-49.04	1-57	0
1	55	SC_CARRIL_REM	LinMoving	Max P	0.03	-3.38	0.03	19.85	0.42	-45.66	1-58	0
1	56	SC_CARRIL_REM	LinMoving	Max P	0.03	-3.38	0.03	19.85	0.39	-42.27	1-59	0
1	57	SC_CARRIL_REM	LinMoving	Max P	0.03	-3.38	0.03	19.85	0.36	-38.89	1-60	0
1	58	SC_CARRIL_REM	LinMoving	Max P	0.03	-3.38	0.03	19.85	0.33	-35.50	1-61	0
1	59	SC_CARRIL_REM	LinMoving	Max P	0.03	-3.38	0.03	19.85	0.29	-32.12	1-62	0
1	60	SC_CARRIL_REM	LinMoving	Max P	0.03	-3.38	0.03	19.85	0.26	-28.74	1-63	0

ESTRUCTURA E1. ESFUERZOS EN TABLERO PARA TODOS LOS CASOS E HIPOTESIS DE CARGA

Frame	Station	OutputCase	CaseType	StepType	P	V2	V3	T	M2	M3	FrameElem	ElemStation
Text	m	Text	Text	Text	KN	KN	KN	KN-m	KN-m	KN-m	Text	m
1	61	SC_CARRIL_REM	LinMoving	Max P	0.03	-3.38	0.03	19.85	0.23	-25.35	1-64	0
1	62	SC_CARRIL_REM	LinMoving	Max P	0.03	-3.38	0.03	19.85	0.20	-21.97	1-65	0
1	63	SC_CARRIL_REM	LinMoving	Max P	0.03	-3.38	0.03	19.85	0.17	-18.58	1-66	0
1	64	SC_CARRIL_REM	LinMoving	Max P	0.03	-3.38	0.03	19.85	0.13	-15.20	1-67	0
1	65	SC_CARRIL_REM	LinMoving	Max P	0.03	-3.38	0.03	19.85	0.10	-11.82	1-68	0
1	66	SC_CARRIL_REM	LinMoving	Max P	0.03	-3.38	0.03	19.85	0.07	-8.43	1-69	0
1	67	SC_CARRIL_REM	LinMoving	Max P	0.03	-3.38	0.03	19.85	0.04	-5.05	1-70	0
1	67.5	SC_CARRIL_REM	LinMoving	Max P	0.03	-3.38	0.03	19.86	0.02	-3.36	1-71	0
1	68.5	SC_CARRIL_REM	LinMoving	Max P	0.00	0.00	0.00	0.00	0.00	0.00	1-72	0
1	0	SC_CARRIL_REM	LinMoving	Min P	0.00	0.00	0.00	0.00	0.00	0.00	1-1	0
1	0.5	SC_CARRIL_REM	LinMoving	Min P	-1.24	-67.21	-0.06	-304.01	-0.14	-2.31	1-2	0
1	1.5	SC_CARRIL_REM	LinMoving	Min P	-1.24	-62.21	-0.06	-289.00	-0.08	62.32	1-3	0
1	2	SC_CARRIL_REM	LinMoving	Min P	-1.24	-62.21	-0.06	-289.00	-0.04	93.38	1-4	0
1	3	SC_CARRIL_REM	LinMoving	Min P	-1.24	-57.21	-0.06	-274.00	0.02	150.60	1-5	0
1	4	SC_CARRIL_REM	LinMoving	Min P	-1.24	-52.21	-0.06	-259.00	0.09	202.81	1-6	0
1	5	SC_CARRIL_REM	LinMoving	Min P	-1.24	-47.21	-0.06	-244.00	0.15	250.03	1-7	0
1	6	SC_CARRIL_REM	LinMoving	Min P	-1.24	-42.21	-0.06	-229.00	0.21	292.25	1-8	0
1	7	SC_CARRIL_REM	LinMoving	Min P	-1.24	-37.21	-0.06	-214.00	0.28	329.47	1-9	0
1	8	SC_CARRIL_REM	LinMoving	Min P	-1.24	-32.21	-0.06	-199.00	0.34	361.69	1-10	0
1	9	SC_CARRIL_REM	LinMoving	Min P	-1.24	-27.21	-0.06	-184.00	0.41	388.90	1-11	0
1	10	SC_CARRIL_REM	LinMoving	Min P	-1.24	-22.21	-0.06	-169.00	0.47	411.12	1-12	0
1	11	SC_CARRIL_REM	LinMoving	Min P	-1.24	-17.21	-0.06	-154.00	0.54	428.34	1-13	0
1	12	SC_CARRIL_REM	LinMoving	Min P	-1.24	-12.22	-0.06	-139.00	0.60	440.56	1-14	0
1	13	SC_CARRIL_REM	LinMoving	Min P	-1.24	-7.22	-0.06	-124.00	0.67	447.78	1-15	0
1	14	SC_CARRIL_REM	LinMoving	Min P	-1.24	-2.22	-0.06	-109.00	0.73	449.99	1-16	0
1	15	SC_CARRIL_REM	LinMoving	Min P	-1.24	2.79	-0.06	-94.01	0.80	447.21	1-17	0
1	16	SC_CARRIL_REM	LinMoving	Min P	-1.24	7.79	-0.06	-79.01	0.86	439.43	1-18	0
1	17	SC_CARRIL_REM	LinMoving	Min P	-1.24	12.79	-0.06	-64.01	0.92	426.65	1-19	0
1	18	SC_CARRIL_REM	LinMoving	Min P	-1.24	17.79	-0.06	-49.01	0.99	408.86	1-20	0
1	19	SC_CARRIL_REM	LinMoving	Min P	-1.24	22.78	-0.06	-34.01	1.05	386.08	1-21	0
1	20	SC_CARRIL_REM	LinMoving	Min P	-1.24	27.78	-0.06	-19.01	1.12	358.30	1-22	0
1	21	SC_CARRIL_REM	LinMoving	Min P	-1.24	32.78	-0.06	-4.01	1.18	325.52	1-23	0
1	22	SC_CARRIL_REM	LinMoving	Min P	-1.24	37.78	-0.06	10.99	1.25	287.74	1-24	0
1	23	SC_CARRIL_REM	LinMoving	Min P	-1.24	42.78	-0.06	25.99	1.31	244.95	1-25	0
1	24	SC_CARRIL_REM	LinMoving	Min P	-1.24	47.78	-0.06	40.99	1.38	197.17	1-26	0
1	25	SC_CARRIL_REM	LinMoving	Min P	-1.24	52.78	-0.06	55.99	1.44	144.39	1-27	0
1	26	SC_CARRIL_REM	LinMoving	Min P	-1.24	57.78	-0.06	70.99	1.50	86.61	1-28	0
1	27	SC_CARRIL_REM	LinMoving	Min P	-1.24	62.78	-0.06	85.99	1.57	23.83	1-29	0
1	28	SC_CARRIL_REM	LinMoving	Min P	-1.24	67.78	-0.06	100.99	1.63	-43.96	1-30	0
1	29	SC_CARRIL_REM	LinMoving	Min P	-1.24	72.78	-0.06	115.99	1.70	-116.74	1-31	0
1	30	SC_CARRIL_REM	LinMoving	Min P	-1.24	77.78	-0.06	130.99	1.76	-194.52	1-32	0
1	31	SC_CARRIL_REM	LinMoving	Min P	-1.24	82.78	-0.06	145.99	1.83	-277.30	1-33	0
1	32	SC_CARRIL_REM	LinMoving	Min P	-1.24	90.28	-0.06	168.49	1.89	-365.08	1-34	0
1	33	SC_CARRIL_REM	LinMoving	Min P	-1.24	95.28	-0.06	183.48	1.96	-457.82	1-35	0
1	33.75	SC_CARRIL_REM	LinMoving	Min P	-1.24	97.78	-0.06	190.98	2.00	-531.16	1-36	0
1	34.5	SC_CARRIL_REM	LinMoving	Min P	-1.24	-102.69	0.06	-205.70	2.05	-606.95	1-37	0
1	35.25	SC_CARRIL_REM	LinMoving	Min P	-1.24	-97.78	0.06	-190.98	2.00	-531.16	1-38	0
1	36	SC_CARRIL_REM	LinMoving	Min P	-1.24	-95.28	0.06	-183.49	1.96	-457.87	1-39	0
1	37	SC_CARRIL_REM	LinMoving	Min P	-1.24	-87.78	0.06	-160.99	1.89	-365.08	1-40	0
1	38	SC_CARRIL_REM	LinMoving	Min P	-1.24	-82.78	0.06	-145.99	1.83	-277.30	1-41	0
1	39	SC_CARRIL_REM	LinMoving	Min P	-1.24	-77.78	0.06	-130.99	1.76	-194.52	1-42	0
1	40	SC_CARRIL_REM	LinMoving	Min P	-1.24	-72.78	0.06	-115.99	1.70	-116.74	1-43	0
1	41	SC_CARRIL_REM	LinMoving	Min P	-1.24	-67.78	0.06	-100.99	1.63	-43.96	1-44	0
1	42	SC_CARRIL_REM	LinMoving	Min P	-1.24	-62.78	0.06	-85.99	1.57	23.83	1-45	0
1	43	SC_CARRIL_REM	LinMoving	Min P	-1.24	-57.78	0.06	-70.99	1.50	86.61	1-46	0
1	44	SC_CARRIL_REM	LinMoving	Min P	-1.24	-52.78	0.06	-55.99	1.44	144.39	1-47	0
1	45	SC_CARRIL_REM	LinMoving	Min P	-1.24	-47.78	0.06	-40.99	1.38	197.17	1-48	0
1	46	SC_CARRIL_REM	LinMoving	Min P	-1.24	-42.78	0.06	-25.99	1.31	244.95	1-49	0
1	47	SC_CARRIL_REM	LinMoving	Min P	-1.24	-37.78	0.06	-10.99	1.25	287.74	1-50	0
1	48	SC_CARRIL_REM	LinMoving	Min P	-1.24	-32.78	0.06	4.01	1.18	325.52	1-51	0
1	49	SC_CARRIL_REM	LinMoving	Min P	-1.24	-27.78	0.06	19.01	1.12	358.30	1-52	0
1	50	SC_CARRIL_REM	LinMoving	Min P	-1.24	-22.78	0.06	34.01	1.05	386.08	1-53	0
1	51	SC_CARRIL_REM	LinMoving	Min P	-1.24	-17.79	0.06	49.01	0.99	408.86	1-54	0
1	52	SC_CARRIL_REM	LinMoving	Min P	-1.24	-12.79	0.06	64.01	0.92	426.65	1-55	0
1	53	SC_CARRIL_REM	LinMoving	Min P	-1.24	-7.79	0.06	79.01	0.86	439.43	1-56	0
1	54	SC_CARRIL_REM	LinMoving	Min P	-1.24	-2.79	0.06	94.01	0.80	447.21	1-57	0
1	55	SC_CARRIL_REM	LinMoving	Min P	-1.24	2.22	0.06	109.01	0.73	449.99	1-58	0
1	56	SC_CARRIL_REM	LinMoving	Min P	-1.24	7.22	0.06	124.01	0.67	447.78	1-59	0
1	57	SC_CARRIL_REM	LinMoving	Min P	-1.24	12.22	0.06	139.01	0.60	440.56	1-60	0
1	58	SC_CARRIL_REM	LinMoving	Min P	-1.24	17.21	0.06	154.00	0.54	428.34	1-61	0
1	59	SC_CARRIL_REM	LinMoving	Min P	-1.24	22.21	0.06	169.00	0.47	411.12	1-62	0
1	60	SC_CARRIL_REM	LinMoving	Min P	-1.24	27.21	0.06	184.00	0.41	388.90	1-63	0
1	61	SC_CARRIL_REM	LinMoving	Min P	-1.24	32.21	0.06	199.00	0.34	361.69	1-64	0
1	62	SC_CARRIL_REM	LinMoving	Min P	-1.24	37.21	0.06	214.00	0.28	329.47	1-65	0
1	63	SC_CARRIL_REM	LinMoving	Min P	-1.24	42.21	0.06	229.00	0.21	292.25	1-66	0
1	64	SC_CARRIL_REM	LinMoving	Min P	-1.24	47.21	0.06	244.00	0.15	250.03	1-67	0
1	65	SC_CARRIL_REM	LinMoving	Min P	-1.24	52.21	0.06	259.00	0.09	202.81	1-68	0
1	66	SC_CARRIL_REM	LinMoving	Min P	-1.24	57.21	0.06	274.00	0.02	150.60	1-69	0
1	67	SC_CARRIL_REM	LinMoving	Min P	-1.24	62.21	0.06	289.00	-0.04	93.42	1-70	0
1	67.5	SC_CARRIL_REM	LinMoving	Min P	-1.24	62.21	0.06	289.01	-0.08	62.40	1-71	0
1	68.5	SC_CARRIL_REM	LinMoving	Min P	0.00	0.00	0.00	0.00	0.00	0.00	1-72	0

ESTRUCTURA E1. ESFUERZOS EN TABLERO PARA TODOS LOS CASOS E HIPOTESIS DE CARGA

Frame	Station	OutputCase	CaseType	StepType	P	V2	V3	T	M2	M3	FrameElem	ElemStation
Text	m	Text	Text	Text	KN	KN	KN	KN-m	KN-m	KN-m	Text	m
1	0	SC_CARRIL_REM	LinMoving	Max V2	0.00	0.00	0.00	0.00	0.00	0.00	1-1	0
1	0.5	SC_CARRIL_REM	LinMoving	Max V2	-0.23	10.60	-0.05	-36.34	-0.03	-0.19	1-2	0
1	1.5	SC_CARRIL_REM	LinMoving	Max V2	-0.24	10.62	-0.05	-36.14	0.01	-10.17	1-3	0
1	2	SC_CARRIL_REM	LinMoving	Max V2	-0.24	10.62	-0.05	-36.14	0.04	-15.48	1-4	0
1	3	SC_CARRIL_REM	LinMoving	Max V2	-0.26	10.81	-0.05	-35.57	0.08	-21.23	1-5	0
1	4	SC_CARRIL_REM	LinMoving	Max V2	-0.28	11.19	-0.05	-34.68	0.12	-22.58	1-6	0
1	5	SC_CARRIL_REM	LinMoving	Max V2	-0.32	11.77	-0.05	-33.39	0.16	-20.43	1-7	0
1	6	SC_CARRIL_REM	LinMoving	Max V2	-0.35	12.53	-0.05	-31.73	0.19	-15.07	1-8	0
1	7	SC_CARRIL_REM	LinMoving	Max V2	-0.39	13.48	-0.05	-29.67	0.23	-7.19	1-9	0
1	8	SC_CARRIL_REM	LinMoving	Max V2	-0.43	14.61	-0.05	-27.24	0.27	2.65	1-10	0
1	9	SC_CARRIL_REM	LinMoving	Max V2	-0.47	15.94	-0.05	-24.41	0.32	13.85	1-11	0
1	10	SC_CARRIL_REM	LinMoving	Max V2	-0.51	17.45	-0.05	-21.20	0.36	25.85	1-12	0
1	11	SC_CARRIL_REM	LinMoving	Max V2	-0.56	19.14	-0.05	-17.61	0.41	38.10	1-13	0
1	12	SC_CARRIL_REM	LinMoving	Max V2	-0.60	21.01	-0.05	-13.62	0.46	50.05	1-14	0
1	13	SC_CARRIL_REM	LinMoving	Max V2	-0.65	23.06	-0.05	-9.25	0.51	61.16	1-15	0
1	14	SC_CARRIL_REM	LinMoving	Max V2	-0.69	25.28	-0.05	-4.50	0.57	70.90	1-16	0
1	15	SC_CARRIL_REM	LinMoving	Max V2	-0.74	27.68	-0.05	0.65	0.63	78.76	1-17	0
1	16	SC_CARRIL_REM	LinMoving	Max V2	-0.78	30.25	-0.05	6.18	0.69	84.25	1-18	0
1	17	SC_CARRIL_REM	LinMoving	Max V2	-0.82	32.99	-0.05	12.10	0.76	86.89	1-19	0
1	18	SC_CARRIL_REM	LinMoving	Max V2	-0.86	35.90	-0.05	18.40	0.83	86.21	1-20	0
1	19	SC_CARRIL_REM	LinMoving	Max V2	-0.90	38.96	-0.06	25.10	0.91	81.77	1-21	0
1	20	SC_CARRIL_REM	LinMoving	Max V2	-0.94	42.18	-0.06	32.18	1.00	73.15	1-22	0
1	21	SC_CARRIL_REM	LinMoving	Max V2	-0.97	45.55	-0.06	39.66	1.09	59.94	1-23	0
1	22	SC_CARRIL_REM	LinMoving	Max V2	-1.01	49.08	-0.06	47.52	1.19	41.76	1-24	0
1	23	SC_CARRIL_REM	LinMoving	Max V2	-1.04	52.74	-0.06	55.77	1.30	18.25	1-25	0
1	24	SC_CARRIL_REM	LinMoving	Max V2	-1.06	56.55	-0.07	64.42	1.41	-10.94	1-26	0
1	25	SC_CARRIL_REM	LinMoving	Max V2	-1.09	60.50	-0.07	73.45	1.53	-46.10	1-27	0
1	26	SC_CARRIL_REM	LinMoving	Max V2	-1.11	64.57	-0.07	82.87	1.66	-87.53	1-28	0
1	27	SC_CARRIL_REM	LinMoving	Max V2	-1.13	68.77	-0.07	92.68	1.80	-135.48	1-29	0
1	28	SC_CARRIL_REM	LinMoving	Max V2	-1.15	73.09	-0.08	102.89	1.95	-190.19	1-30	0
1	29	SC_CARRIL_REM	LinMoving	Max V2	-1.16	77.52	-0.08	113.48	2.10	-251.86	1-31	0
1	30	SC_CARRIL_REM	LinMoving	Max V2	-1.17	82.07	-0.08	124.46	2.27	-320.66	1-32	0
1	31	SC_CARRIL_REM	LinMoving	Max V2	-1.18	86.71	-0.09	135.84	2.45	-396.75	1-33	0
1	32	SC_CARRIL_REM	LinMoving	Max V2	-1.19	93.95	-0.09	154.99	2.64	-479.95	1-34	0
1	33	SC_CARRIL_REM	LinMoving	Max V2	-1.19	98.79	-0.09	167.19	2.83	-571.03	1-35	0
1	33.75	SC_CARRIL_REM	LinMoving	Max V2	-1.20	101.21	-0.10	172.27	3.02	-644.31	1-36	0
1	34.5	SC_CARRIL_REM	LinMoving	Max V2	-0.01	0.03	0.00	-0.14	-0.03	0.28	1-37	0
1	35.25	SC_CARRIL_REM	LinMoving	Max V2	-0.01	0.04	0.00	1.14	0.04	0.66	1-38	0
1	36	SC_CARRIL_REM	LinMoving	Max V2	-0.02	0.12	0.00	3.56	0.15	3.26	1-39	0
1	37	SC_CARRIL_REM	LinMoving	Max V2	-0.02	0.29	0.01	6.46	0.26	8.57	1-40	0
1	38	SC_CARRIL_REM	LinMoving	Max V2	-0.03	0.55	0.01	9.70	0.35	16.26	1-41	0
1	39	SC_CARRIL_REM	LinMoving	Max V2	-0.04	0.90	0.02	13.33	0.43	26.34	1-42	0
1	40	SC_CARRIL_REM	LinMoving	Max V2	-0.05	1.36	0.02	17.34	0.50	38.70	1-43	0
1	41	SC_CARRIL_REM	LinMoving	Max V2	-0.06	1.92	0.02	21.75	0.56	53.20	1-44	0
1	42	SC_CARRIL_REM	LinMoving	Max V2	-0.08	2.60	0.02	26.55	0.61	69.66	1-45	0
1	43	SC_CARRIL_REM	LinMoving	Max V2	-0.10	3.40	0.03	31.73	0.65	87.87	1-46	0
1	44	SC_CARRIL_REM	LinMoving	Max V2	-0.12	4.33	0.03	37.31	0.68	107.61	1-47	0
1	45	SC_CARRIL_REM	LinMoving	Max V2	-0.15	5.39	0.03	43.28	0.71	128.61	1-48	0
1	46	SC_CARRIL_REM	LinMoving	Max V2	-0.17	6.58	0.03	49.63	0.72	150.60	1-49	0
1	47	SC_CARRIL_REM	LinMoving	Max V2	-0.20	7.91	0.04	56.38	0.73	173.25	1-50	0
1	48	SC_CARRIL_REM	LinMoving	Max V2	-0.24	9.39	0.04	63.52	0.73	196.23	1-51	0
1	49	SC_CARRIL_REM	LinMoving	Max V2	-0.27	11.01	0.04	71.04	0.73	219.19	1-52	0
1	50	SC_CARRIL_REM	LinMoving	Max V2	-0.31	12.79	0.04	78.96	0.72	241.73	1-53	0
1	51	SC_CARRIL_REM	LinMoving	Max V2	-0.35	14.73	0.04	87.26	0.70	263.46	1-54	0
1	52	SC_CARRIL_REM	LinMoving	Max V2	-0.39	16.82	0.04	95.96	0.68	283.95	1-55	0
1	53	SC_CARRIL_REM	LinMoving	Max V2	-0.43	19.09	0.05	105.04	0.65	302.76	1-56	0
1	54	SC_CARRIL_REM	LinMoving	Max V2	-0.47	21.51	0.05	114.50	0.62	319.41	1-57	0
1	55	SC_CARRIL_REM	LinMoving	Max V2	-0.52	24.11	0.05	124.36	0.59	333.44	1-58	0
1	56	SC_CARRIL_REM	LinMoving	Max V2	-0.56	26.89	0.05	134.60	0.54	344.35	1-59	0
1	57	SC_CARRIL_REM	LinMoving	Max V2	-0.61	29.84	0.05	145.23	0.50	351.62	1-60	0
1	58	SC_CARRIL_REM	LinMoving	Max V2	-0.65	32.97	0.05	156.25	0.45	354.73	1-61	0
1	59	SC_CARRIL_REM	LinMoving	Max V2	-0.70	36.28	0.05	167.65	0.40	353.15	1-62	0
1	60	SC_CARRIL_REM	LinMoving	Max V2	-0.74	39.77	0.05	179.44	0.35	346.32	1-63	0
1	61	SC_CARRIL_REM	LinMoving	Max V2	-0.78	43.44	0.05	191.62	0.30	333.69	1-64	0
1	62	SC_CARRIL_REM	LinMoving	Max V2	-0.82	47.31	0.05	204.18	0.24	314.69	1-65	0
1	63	SC_CARRIL_REM	LinMoving	Max V2	-0.86	51.36	0.05	217.13	0.19	288.74	1-66	0
1	64	SC_CARRIL_REM	LinMoving	Max V2	-0.89	55.60	0.05	230.46	0.13	255.27	1-67	0
1	65	SC_CARRIL_REM	LinMoving	Max V2	-0.92	60.02	0.05	244.18	0.07	213.68	1-68	0
1	66	SC_CARRIL_REM	LinMoving	Max V2	-0.95	64.64	0.05	258.28	0.01	163.40	1-69	0
1	67	SC_CARRIL_REM	LinMoving	Max V2	-0.97	69.45	0.05	272.72	-0.04	103.85	1-70	0
1	67.5	SC_CARRIL_REM	LinMoving	Max V2	-0.97	69.45	0.05	272.72	-0.07	69.19	1-71	0
1	68.5	SC_CARRIL_REM	LinMoving	Max V2	0.00	0.00	0.00	0.00	0.00	0.00	1-72	0
1	0	SC_CARRIL_REM	LinMoving	Min V2	0.00	0.00	0.00	0.00	0.00	0.00	1-1	0
1	0.5	SC_CARRIL_REM	LinMoving	Min V2	-0.98	-74.43	-0.05	-287.52	-0.12	-2.09	1-2	0
1	1.5	SC_CARRIL_REM	LinMoving	Min V2	-0.97	-69.45	-0.05	-272.72	-0.07	69.13	1-3	0
1	2	SC_CARRIL_REM	LinMoving	Min V2	-0.97	-69.45	-0.05	-272.72	-0.04	103.82	1-4	0
1	3	SC_CARRIL_REM	LinMoving	Min V2	-0.95	-64.64	-0.05	-258.28	0.01	163.40	1-5	0
1	4	SC_CARRIL_REM	LinMoving	Min V2	-0.92	-60.02	-0.05	-244.18	0.07	213.68	1-6	0
1	5	SC_CARRIL_REM	LinMoving	Min V2	-0.89	-55.60	-0.05	-230.46	0.13	255.27	1-7	0
1	6	SC_CARRIL_REM	LinMoving	Min V2	-0.86	-51.36	-0.05	-217.13	0.19	288.74	1-8	0
1	7	SC_CARRIL_REM	LinMoving	Min V2	-0.82	-47.31	-0.05	-204.18	0.24	314.69	1-9	0

ESTRUCTURA E1. ESFUERZOS EN TABLERO PARA TODOS LOS CASOS E HIPOTESIS DE CARGA

Frame	Station	OutputCase	CaseType	StepType	P	V2	V3	T	M2	M3	FrameElem	ElemStation
Text	m	Text	Text	Text	KN	KN	KN	KN-m	KN-m	KN-m	Text	m
1	8	SC_CARRIL_REM	LinMoving	Min V2	-0.78	-43.44	-0.05	-191.62	0.30	333.69	1-10	0
1	9	SC_CARRIL_REM	LinMoving	Min V2	-0.74	-39.77	-0.05	-179.44	0.35	346.32	1-11	0
1	10	SC_CARRIL_REM	LinMoving	Min V2	-0.70	-36.28	-0.05	-167.65	0.40	353.15	1-12	0
1	11	SC_CARRIL_REM	LinMoving	Min V2	-0.65	-32.97	-0.05	-156.25	0.45	354.73	1-13	0
1	12	SC_CARRIL_REM	LinMoving	Min V2	-0.61	-29.84	-0.05	-145.23	0.50	351.62	1-14	0
1	13	SC_CARRIL_REM	LinMoving	Min V2	-0.56	-26.89	-0.05	-134.60	0.54	344.35	1-15	0
1	14	SC_CARRIL_REM	LinMoving	Min V2	-0.52	-24.11	-0.05	-124.36	0.59	333.44	1-16	0
1	15	SC_CARRIL_REM	LinMoving	Min V2	-0.47	-21.51	-0.05	-114.50	0.62	319.41	1-17	0
1	16	SC_CARRIL_REM	LinMoving	Min V2	-0.43	-19.09	-0.05	-105.04	0.65	302.76	1-18	0
1	17	SC_CARRIL_REM	LinMoving	Min V2	-0.39	-16.82	-0.04	-95.96	0.68	283.95	1-19	0
1	18	SC_CARRIL_REM	LinMoving	Min V2	-0.35	-14.73	-0.04	-87.26	0.70	263.46	1-20	0
1	19	SC_CARRIL_REM	LinMoving	Min V2	-0.31	-12.79	-0.04	-78.96	0.72	241.73	1-21	0
1	20	SC_CARRIL_REM	LinMoving	Min V2	-0.27	-11.01	-0.04	-71.04	0.73	219.19	1-22	0
1	21	SC_CARRIL_REM	LinMoving	Min V2	-0.24	-9.39	-0.04	-63.52	0.73	196.23	1-23	0
1	22	SC_CARRIL_REM	LinMoving	Min V2	-0.20	-7.91	-0.04	-56.38	0.73	173.25	1-24	0
1	23	SC_CARRIL_REM	LinMoving	Min V2	-0.17	-6.58	-0.03	-49.63	0.72	150.60	1-25	0
1	24	SC_CARRIL_REM	LinMoving	Min V2	-0.15	-5.39	-0.03	-43.28	0.71	128.61	1-26	0
1	25	SC_CARRIL_REM	LinMoving	Min V2	-0.12	-4.33	-0.03	-37.31	0.68	107.61	1-27	0
1	26	SC_CARRIL_REM	LinMoving	Min V2	-0.10	-3.40	-0.03	-31.73	0.65	87.87	1-28	0
1	27	SC_CARRIL_REM	LinMoving	Min V2	-0.08	-2.60	-0.02	-26.55	0.61	69.65	1-29	0
1	28	SC_CARRIL_REM	LinMoving	Min V2	-0.06	-1.92	-0.02	-21.75	0.56	53.20	1-30	0
1	29	SC_CARRIL_REM	LinMoving	Min V2	-0.05	-1.36	-0.02	-17.34	0.50	38.70	1-31	0
1	30	SC_CARRIL_REM	LinMoving	Min V2	-0.04	-0.90	-0.02	-13.33	0.43	26.34	1-32	0
1	31	SC_CARRIL_REM	LinMoving	Min V2	-0.03	-0.55	-0.01	-9.70	0.35	16.26	1-33	0
1	32	SC_CARRIL_REM	LinMoving	Min V2	-0.02	-0.28	-0.01	-6.35	0.25	8.30	1-34	0
1	33	SC_CARRIL_REM	LinMoving	Min V2	-0.02	-0.12	0.00	-3.56	0.15	3.26	1-35	0
1	33.75	SC_CARRIL_REM	LinMoving	Min V2	-0.01	-0.04	0.00	-1.14	0.04	0.66	1-36	0
1	34.5	SC_CARRIL_REM	LinMoving	Min V2	-1.20	-106.19	0.10	-185.99	3.16	-722.30	1-37	0
1	35.25	SC_CARRIL_REM	LinMoving	Min V2	-1.20	-101.21	0.10	-172.27	3.02	-644.31	1-38	0
1	36	SC_CARRIL_REM	LinMoving	Min V2	-1.19	-98.79	0.09	-167.19	2.83	-571.08	1-39	0
1	37	SC_CARRIL_REM	LinMoving	Min V2	-1.19	-91.46	0.09	-147.60	2.63	-480.22	1-40	0
1	38	SC_CARRIL_REM	LinMoving	Min V2	-1.18	-86.71	0.09	-135.83	2.45	-396.75	1-41	0
1	39	SC_CARRIL_REM	LinMoving	Min V2	-1.17	-82.07	0.08	-124.46	2.27	-320.66	1-42	0
1	40	SC_CARRIL_REM	LinMoving	Min V2	-1.16	-77.52	0.08	-113.48	2.10	-251.86	1-43	0
1	41	SC_CARRIL_REM	LinMoving	Min V2	-1.15	-73.09	0.08	-102.88	1.95	-190.19	1-44	0
1	42	SC_CARRIL_REM	LinMoving	Min V2	-1.13	-68.77	0.07	-92.68	1.80	-135.48	1-45	0
1	43	SC_CARRIL_REM	LinMoving	Min V2	-1.11	-64.57	0.07	-82.87	1.66	-87.52	1-46	0
1	44	SC_CARRIL_REM	LinMoving	Min V2	-1.09	-60.50	0.07	-73.45	1.53	-46.10	1-47	0
1	45	SC_CARRIL_REM	LinMoving	Min V2	-1.06	-56.55	0.07	-64.41	1.41	-10.94	1-48	0
1	46	SC_CARRIL_REM	LinMoving	Min V2	-1.04	-52.74	0.06	-55.77	1.30	18.25	1-49	0
1	47	SC_CARRIL_REM	LinMoving	Min V2	-1.01	-49.08	0.06	-47.52	1.19	41.76	1-50	0
1	48	SC_CARRIL_REM	LinMoving	Min V2	-0.97	-45.55	0.06	-39.66	1.09	59.94	1-51	0
1	49	SC_CARRIL_REM	LinMoving	Min V2	-0.94	-42.18	0.06	-32.18	1.00	73.15	1-52	0
1	50	SC_CARRIL_REM	LinMoving	Min V2	-0.90	-38.96	0.06	-25.10	0.91	81.77	1-53	0
1	51	SC_CARRIL_REM	LinMoving	Min V2	-0.86	-35.90	0.05	-18.40	0.83	86.21	1-54	0
1	52	SC_CARRIL_REM	LinMoving	Min V2	-0.82	-32.99	0.05	-12.10	0.76	86.89	1-55	0
1	53	SC_CARRIL_REM	LinMoving	Min V2	-0.78	-30.25	0.05	-6.18	0.69	84.25	1-56	0
1	54	SC_CARRIL_REM	LinMoving	Min V2	-0.74	-27.68	0.05	-0.65	0.63	78.76	1-57	0
1	55	SC_CARRIL_REM	LinMoving	Min V2	-0.69	-25.28	0.05	4.50	0.57	70.90	1-58	0
1	56	SC_CARRIL_REM	LinMoving	Min V2	-0.65	-23.06	0.05	9.25	0.51	61.16	1-59	0
1	57	SC_CARRIL_REM	LinMoving	Min V2	-0.60	-21.01	0.05	13.62	0.46	50.05	1-60	0
1	58	SC_CARRIL_REM	LinMoving	Min V2	-0.56	-19.14	0.05	17.61	0.41	38.10	1-61	0
1	59	SC_CARRIL_REM	LinMoving	Min V2	-0.51	-17.45	0.05	21.20	0.36	25.85	1-62	0
1	60	SC_CARRIL_REM	LinMoving	Min V2	-0.47	-15.94	0.05	24.41	0.32	13.85	1-63	0
1	61	SC_CARRIL_REM	LinMoving	Min V2	-0.43	-14.61	0.05	27.24	0.28	2.65	1-64	0
1	62	SC_CARRIL_REM	LinMoving	Min V2	-0.39	-13.48	0.05	29.68	0.23	-7.19	1-65	0
1	63	SC_CARRIL_REM	LinMoving	Min V2	-0.35	-12.53	0.05	31.73	0.19	-15.07	1-66	0
1	64	SC_CARRIL_REM	LinMoving	Min V2	-0.32	-11.77	0.05	33.39	0.16	-20.43	1-67	0
1	65	SC_CARRIL_REM	LinMoving	Min V2	-0.28	-11.19	0.05	34.68	0.12	-22.58	1-68	0
1	66	SC_CARRIL_REM	LinMoving	Min V2	-0.26	-10.81	0.05	35.57	0.08	-21.23	1-69	0
1	67	SC_CARRIL_REM	LinMoving	Min V2	-0.24	-10.62	0.05	36.14	0.04	-15.48	1-70	0
1	67.5	SC_CARRIL_REM	LinMoving	Min V2	-0.24	-10.62	0.05	36.14	0.01	-10.15	1-71	0
1	68.5	SC_CARRIL_REM	LinMoving	Min V2	0.00	-2.50	0.00	-7.50	0.00	-1.25	1-72	0
1	0	SC_CARRIL_REM	LinMoving	Max V3	0.00	0.00	0.00	0.00	0.00	0.00	1-1	0
1	0.5	SC_CARRIL_REM	LinMoving	Max V3	-0.26	-23.47	0.01	-75.48	-0.04	-1.47	1-2	0
1	1.5	SC_CARRIL_REM	LinMoving	Max V3	-0.26	-18.47	0.01	-60.48	-0.04	19.48	1-3	0
1	2	SC_CARRIL_REM	LinMoving	Max V3	-0.26	-18.47	0.01	-60.48	-0.04	28.71	1-4	0
1	3	SC_CARRIL_REM	LinMoving	Max V3	-0.26	-13.47	0.01	-45.48	-0.05	42.18	1-5	0
1	4	SC_CARRIL_REM	LinMoving	Max V3	-0.26	-8.47	0.01	-30.48	-0.05	50.65	1-6	0
1	5	SC_CARRIL_REM	LinMoving	Max V3	-0.26	-3.47	0.01	-15.48	-0.06	54.12	1-7	0
1	6	SC_CARRIL_REM	LinMoving	Max V3	-0.26	1.49	0.01	-0.63	-0.06	52.64	1-8	0
1	7	SC_CARRIL_REM	LinMoving	Max V3	-0.26	3.35	0.01	4.95	-0.07	49.30	1-9	0
1	8	SC_CARRIL_REM	LinMoving	Max V3	-0.26	3.35	0.01	4.95	-0.07	45.95	1-10	0
1	9	SC_CARRIL_REM	LinMoving	Max V3	-0.26	3.35	0.01	4.95	-0.08	42.61	1-11	0
1	10	SC_CARRIL_REM	LinMoving	Max V3	-0.26	3.35	0.01	4.95	-0.08	39.26	1-12	0
1	11	SC_CARRIL_REM	LinMoving	Max V3	-0.26	3.35	0.01	4.95	-0.09	35.92	1-13	0
1	12	SC_CARRIL_REM	LinMoving	Max V3	-0.26	3.35	0.01	4.95	-0.09	32.57	1-14	0
1	13	SC_CARRIL_REM	LinMoving	Max V3	-0.26	3.35	0.01	4.95	-0.10	29.23	1-15	0
1	14	SC_CARRIL_REM	LinMoving	Max V3	-0.26	3.35	0.01	4.95	-0.10	25.88	1-16	0
1	15	SC_CARRIL_REM	LinMoving	Max V3	-0.26	3.35	0.01	4.95	-0.11	22.53	1-17	0
1	16	SC_CARRIL_REM	LinMoving	Max V3	-0.26	3.35	0.01	4.95	-0.11	19.19	1-18	0

ESTRUCTURA E1. ESFUERZOS EN TABLERO PARA TODOS LOS CASOS E HIPOTESIS DE CARGA

Frame	Station	OutputCase	CaseType	StepType	P	V2	V3	T	M2	M3	FrameElem	ElemStation
Text	m	Text	Text	Text	KN	KN	KN	KN-m	KN-m	KN-m	Text	m
1	17	SC_CARRIL_REM	LinMoving	Max V3	-0.26	3.35	0.01	4.95	-0.12	15.84	1-19	0
1	18	SC_CARRIL_REM	LinMoving	Max V3	-0.26	3.35	0.01	4.95	-0.12	12.50	1-20	0
1	19	SC_CARRIL_REM	LinMoving	Max V3	-0.26	3.35	0.01	4.95	-0.13	9.15	1-21	0
1	20	SC_CARRIL_REM	LinMoving	Max V3	-0.26	3.35	0.01	4.95	-0.13	5.81	1-22	0
1	21	SC_CARRIL_REM	LinMoving	Max V3	-0.26	3.35	0.01	4.95	-0.14	2.46	1-23	0
1	22	SC_CARRIL_REM	LinMoving	Max V3	-0.26	3.35	0.01	4.95	-0.14	-0.88	1-24	0
1	23	SC_CARRIL_REM	LinMoving	Max V3	-0.26	3.35	0.01	4.95	-0.15	-4.23	1-25	0
1	24	SC_CARRIL_REM	LinMoving	Max V3	-0.26	3.35	0.01	4.95	-0.15	-7.57	1-26	0
1	25	SC_CARRIL_REM	LinMoving	Max V3	-0.26	3.35	0.01	4.95	-0.16	-10.92	1-27	0
1	26	SC_CARRIL_REM	LinMoving	Max V3	-0.26	3.35	0.01	4.95	-0.16	-14.27	1-28	0
1	27	SC_CARRIL_REM	LinMoving	Max V3	-0.26	3.35	0.01	4.95	-0.17	-17.61	1-29	0
1	28	SC_CARRIL_REM	LinMoving	Max V3	-0.26	3.35	0.01	4.95	-0.17	-20.96	1-30	0
1	29	SC_CARRIL_REM	LinMoving	Max V3	-0.26	3.35	0.01	4.95	-0.18	-24.30	1-31	0
1	30	SC_CARRIL_REM	LinMoving	Max V3	-0.26	3.35	0.01	4.95	-0.19	-27.65	1-32	0
1	31	SC_CARRIL_REM	LinMoving	Max V3	-0.26	3.35	0.01	4.95	-0.19	-30.99	1-33	0
1	32	SC_CARRIL_REM	LinMoving	Max V3	-0.26	3.35	0.01	4.95	-0.20	-34.34	1-34	0
1	33	SC_CARRIL_REM	LinMoving	Max V3	-0.26	3.35	0.01	4.95	-0.20	-37.67	1-35	0
1	33.75	SC_CARRIL_REM	LinMoving	Max V3	-0.26	3.35	0.01	4.95	-0.20	-40.18	1-36	0
1	34.5	SC_CARRIL_REM	LinMoving	Max V3	-0.95	-102.80	0.10	-181.12	3.34	-679.33	1-37	0
1	35.25	SC_CARRIL_REM	LinMoving	Max V3	-0.95	-97.80	0.10	-166.12	3.26	-603.47	1-38	0
1	36	SC_CARRIL_REM	LinMoving	Max V3	-0.95	-95.30	0.10	-158.62	3.19	-530.16	1-39	0
1	37	SC_CARRIL_REM	LinMoving	Max V3	-0.95	-87.80	0.10	-136.12	3.08	-437.36	1-40	0
1	38	SC_CARRIL_REM	LinMoving	Max V3	-0.95	-82.80	0.10	-121.13	2.98	-349.55	1-41	0
1	39	SC_CARRIL_REM	LinMoving	Max V3	-0.95	-77.80	0.10	-106.13	2.88	-266.75	1-42	0
1	40	SC_CARRIL_REM	LinMoving	Max V3	-0.95	-72.80	0.10	-91.13	2.78	-188.95	1-43	0
1	41	SC_CARRIL_REM	LinMoving	Max V3	-0.95	-67.80	0.10	-76.13	2.68	-116.14	1-44	0
1	42	SC_CARRIL_REM	LinMoving	Max V3	-0.95	-62.80	0.10	-61.13	2.58	-48.34	1-45	0
1	43	SC_CARRIL_REM	LinMoving	Max V3	-0.95	-57.80	0.10	-46.13	2.47	14.46	1-46	0
1	44	SC_CARRIL_REM	LinMoving	Max V3	-0.95	-52.80	0.10	-31.13	2.37	72.26	1-47	0
1	45	SC_CARRIL_REM	LinMoving	Max V3	-0.95	-47.81	0.10	-16.13	2.27	125.07	1-48	0
1	46	SC_CARRIL_REM	LinMoving	Max V3	-0.95	-42.81	0.10	-1.13	2.17	172.87	1-49	0
1	47	SC_CARRIL_REM	LinMoving	Max V3	-0.95	-37.81	0.10	13.87	2.07	215.67	1-50	0
1	48	SC_CARRIL_REM	LinMoving	Max V3	-0.95	-32.81	0.10	28.87	1.97	253.48	1-51	0
1	49	SC_CARRIL_REM	LinMoving	Max V3	-0.95	-27.81	0.10	43.87	1.87	286.28	1-52	0
1	50	SC_CARRIL_REM	LinMoving	Max V3	-0.95	-22.81	0.10	58.87	1.76	314.08	1-53	0
1	51	SC_CARRIL_REM	LinMoving	Max V3	-0.95	-17.81	0.10	73.87	1.66	336.89	1-54	0
1	52	SC_CARRIL_REM	LinMoving	Max V3	-0.95	-12.81	0.10	88.87	1.56	354.69	1-55	0
1	53	SC_CARRIL_REM	LinMoving	Max V3	-0.95	-7.81	0.10	103.87	1.46	367.49	1-56	0
1	54	SC_CARRIL_REM	LinMoving	Max V3	-0.95	-2.81	0.10	118.87	1.36	375.29	1-57	0
1	55	SC_CARRIL_REM	LinMoving	Max V3	-0.95	2.19	0.10	133.87	1.26	378.10	1-58	0
1	56	SC_CARRIL_REM	LinMoving	Max V3	-0.95	7.19	0.10	148.87	1.16	375.90	1-59	0
1	57	SC_CARRIL_REM	LinMoving	Max V3	-0.95	12.19	0.10	163.87	1.05	368.70	1-60	0
1	58	SC_CARRIL_REM	LinMoving	Max V3	-0.95	17.19	0.10	178.87	0.95	356.51	1-61	0
1	59	SC_CARRIL_REM	LinMoving	Max V3	-0.95	22.19	0.10	193.87	0.85	339.31	1-62	0
1	60	SC_CARRIL_REM	LinMoving	Max V3	-0.95	27.19	0.10	208.87	0.75	317.11	1-63	0
1	61	SC_CARRIL_REM	LinMoving	Max V3	-0.95	32.19	0.10	223.86	0.65	289.91	1-64	0
1	62	SC_CARRIL_REM	LinMoving	Max V3	-0.95	37.19	0.10	238.86	0.55	257.72	1-65	0
1	63	SC_CARRIL_REM	LinMoving	Max V3	-0.95	40.24	0.10	247.99	0.44	220.52	1-66	0
1	64	SC_CARRIL_REM	LinMoving	Max V3	-0.95	40.27	0.10	248.09	0.34	180.29	1-67	0
1	65	SC_CARRIL_REM	LinMoving	Max V3	-0.95	40.27	0.10	248.09	0.24	140.02	1-68	0
1	66	SC_CARRIL_REM	LinMoving	Max V3	-0.95	40.27	0.10	248.09	0.14	99.75	1-69	0
1	67	SC_CARRIL_REM	LinMoving	Max V3	-0.95	40.27	0.10	248.09	0.04	59.52	1-70	0
1	67.5	SC_CARRIL_REM	LinMoving	Max V3	-0.95	40.27	0.10	248.10	-0.01	39.45	1-71	0
1	68.5	SC_CARRIL_REM	LinMoving	Max V3	0.00	0.00	0.00	0.00	0.00	0.00	1-72	0
1	0	SC_CARRIL_REM	LinMoving	Min V3	0.00	0.00	0.00	0.00	0.00	0.00	1-1	0
1	0.5	SC_CARRIL_REM	LinMoving	Min V3	-0.95	-40.36	-0.10	-248.38	-0.11	-0.82	1-2	0
1	1.5	SC_CARRIL_REM	LinMoving	Min V3	-0.95	-40.36	-0.10	-248.37	-0.01	39.48	1-3	0
1	2	SC_CARRIL_REM	LinMoving	Min V3	-0.95	-40.36	-0.10	-248.37	0.04	59.62	1-4	0
1	3	SC_CARRIL_REM	LinMoving	Min V3	-0.95	-40.36	-0.10	-248.37	0.14	99.98	1-5	0
1	4	SC_CARRIL_REM	LinMoving	Min V3	-0.95	-40.36	-0.10	-248.37	0.24	140.35	1-6	0
1	5	SC_CARRIL_REM	LinMoving	Min V3	-0.95	-40.36	-0.10	-248.37	0.34	180.71	1-7	0
1	6	SC_CARRIL_REM	LinMoving	Min V3	-0.95	-40.32	-0.10	-248.23	0.44	221.02	1-8	0
1	7	SC_CARRIL_REM	LinMoving	Min V3	-0.95	-37.18	-0.10	-238.81	0.55	258.20	1-9	0
1	8	SC_CARRIL_REM	LinMoving	Min V3	-0.95	-32.18	-0.10	-223.81	0.65	290.38	1-10	0
1	9	SC_CARRIL_REM	LinMoving	Min V3	-0.95	-27.18	-0.10	-208.81	0.75	317.56	1-11	0
1	10	SC_CARRIL_REM	LinMoving	Min V3	-0.95	-22.18	-0.10	-193.81	0.85	339.74	1-12	0
1	11	SC_CARRIL_REM	LinMoving	Min V3	-0.95	-17.18	-0.10	-178.81	0.95	356.92	1-13	0
1	12	SC_CARRIL_REM	LinMoving	Min V3	-0.95	-12.18	-0.10	-163.81	1.05	369.10	1-14	0
1	13	SC_CARRIL_REM	LinMoving	Min V3	-0.95	-7.18	-0.10	-148.81	1.16	376.28	1-15	0
1	14	SC_CARRIL_REM	LinMoving	Min V3	-0.95	-2.18	-0.10	-133.81	1.26	378.46	1-16	0
1	15	SC_CARRIL_REM	LinMoving	Min V3	-0.95	2.82	-0.10	-118.81	1.36	375.64	1-17	0
1	16	SC_CARRIL_REM	LinMoving	Min V3	-0.95	7.82	-0.10	-103.81	1.46	367.82	1-18	0
1	17	SC_CARRIL_REM	LinMoving	Min V3	-0.95	12.82	-0.10	-88.81	1.56	354.99	1-19	0
1	18	SC_CARRIL_REM	LinMoving	Min V3	-0.95	17.82	-0.10	-73.81	1.66	337.17	1-20	0
1	19	SC_CARRIL_REM	LinMoving	Min V3	-0.95	22.82	-0.10	-58.81	1.76	314.35	1-21	0
1	20	SC_CARRIL_REM	LinMoving	Min V3	-0.95	27.82	-0.10	-43.81	1.87	286.53	1-22	0
1	21	SC_CARRIL_REM	LinMoving	Min V3	-0.95	32.82	-0.10	-28.81	1.97	253.71	1-23	0
1	22	SC_CARRIL_REM	LinMoving	Min V3	-0.95	37.82	-0.10	-13.81	2.07	215.89	1-24	0
1	23	SC_CARRIL_REM	LinMoving	Min V3	-0.95	42.82	-0.10	1.19	2.17	173.07	1-25	0
1	24	SC_CARRIL_REM	LinMoving	Min V3	-0.95	47.82	-0.10	16.18	2.27	125.25	1-26	0
1	25	SC_CARRIL_REM	LinMoving	Min V3	-0.95	52.82	-0.10	31.18	2.37	72.43	1-27	0

ESTRUCTURA E1. ESFUERZOS EN TABLERO PARA TODOS LOS CASOS E HIPOTESIS DE CARGA

Frame	Station	OutputCase	CaseType	StepType	P	V2	V3	T	M2	M3	FrameElem	ElemStation
Text	m	Text	Text	Text	KN	KN	KN	KN-m	KN-m	KN-m	Text	m
1	26	SC_CARRIL_REM	LinMoving	Min V3	-0.95	57.82	-0.10	46.18	2.47	14.61	1-28	0
1	27	SC_CARRIL_REM	LinMoving	Min V3	-0.95	62.82	-0.10	61.18	2.58	-48.21	1-29	0
1	28	SC_CARRIL_REM	LinMoving	Min V3	-0.95	67.82	-0.10	76.18	2.68	-116.03	1-30	0
1	29	SC_CARRIL_REM	LinMoving	Min V3	-0.95	72.82	-0.10	91.18	2.78	-188.85	1-31	0
1	30	SC_CARRIL_REM	LinMoving	Min V3	-0.95	77.82	-0.10	106.18	2.88	-266.67	1-32	0
1	31	SC_CARRIL_REM	LinMoving	Min V3	-0.95	82.82	-0.10	121.18	2.98	-349.49	1-33	0
1	32	SC_CARRIL_REM	LinMoving	Min V3	-0.95	90.32	-0.10	143.68	3.08	-437.32	1-34	0
1	33	SC_CARRIL_REM	LinMoving	Min V3	-0.95	95.32	-0.10	158.68	3.19	-530.10	1-35	0
1	33.75	SC_CARRIL_REM	LinMoving	Min V3	-0.95	97.82	-0.10	166.18	3.26	-603.47	1-36	0
1	34.5	SC_CARRIL_REM	LinMoving	Min V3	-0.26	-3.36	-0.01	-5.01	-0.21	-42.70	1-37	0
1	35.25	SC_CARRIL_REM	LinMoving	Min V3	-0.26	-3.36	-0.01	-5.01	-0.20	-40.17	1-38	0
1	36	SC_CARRIL_REM	LinMoving	Min V3	-0.26	-3.36	-0.01	-5.01	-0.20	-37.66	1-39	0
1	37	SC_CARRIL_REM	LinMoving	Min V3	-0.26	-3.36	-0.01	-5.01	-0.20	-34.80	1-40	0
1	38	SC_CARRIL_REM	LinMoving	Min V3	-0.26	-3.36	-0.01	-5.01	-0.19	-30.93	1-41	0
1	39	SC_CARRIL_REM	LinMoving	Min V3	-0.26	-3.36	-0.01	-5.01	-0.19	-27.57	1-42	0
1	40	SC_CARRIL_REM	LinMoving	Min V3	-0.26	-3.36	-0.01	-5.01	-0.18	-24.21	1-43	0
1	41	SC_CARRIL_REM	LinMoving	Min V3	-0.26	-3.36	-0.01	-5.01	-0.18	-20.84	1-44	0
1	42	SC_CARRIL_REM	LinMoving	Min V3	-0.26	-3.36	-0.01	-5.01	-0.17	-17.48	1-45	0
1	43	SC_CARRIL_REM	LinMoving	Min V3	-0.26	-3.36	-0.01	-5.01	-0.17	-14.12	1-46	0
1	44	SC_CARRIL_REM	LinMoving	Min V3	-0.26	-3.36	-0.01	-5.01	-0.16	-10.75	1-47	0
1	45	SC_CARRIL_REM	LinMoving	Min V3	-0.26	-3.36	-0.01	-5.01	-0.16	-7.39	1-48	0
1	46	SC_CARRIL_REM	LinMoving	Min V3	-0.26	-3.36	-0.01	-5.01	-0.15	-4.03	1-49	0
1	47	SC_CARRIL_REM	LinMoving	Min V3	-0.26	-3.36	-0.01	-5.01	-0.15	-0.67	1-50	0
1	48	SC_CARRIL_REM	LinMoving	Min V3	-0.26	-3.36	-0.01	-5.01	-0.14	2.70	1-51	0
1	49	SC_CARRIL_REM	LinMoving	Min V3	-0.26	-3.36	-0.01	-5.01	-0.13	6.06	1-52	0
1	50	SC_CARRIL_REM	LinMoving	Min V3	-0.26	-3.36	-0.01	-5.01	-0.13	9.42	1-53	0
1	51	SC_CARRIL_REM	LinMoving	Min V3	-0.26	-3.36	-0.01	-5.01	-0.12	12.79	1-54	0
1	52	SC_CARRIL_REM	LinMoving	Min V3	-0.26	-3.36	-0.01	-5.01	-0.12	16.15	1-55	0
1	53	SC_CARRIL_REM	LinMoving	Min V3	-0.26	-3.36	-0.01	-5.01	-0.11	19.51	1-56	0
1	54	SC_CARRIL_REM	LinMoving	Min V3	-0.26	-3.36	-0.01	-5.01	-0.11	22.88	1-57	0
1	55	SC_CARRIL_REM	LinMoving	Min V3	-0.26	-3.36	-0.01	-5.01	-0.10	26.24	1-58	0
1	56	SC_CARRIL_REM	LinMoving	Min V3	-0.26	-3.36	-0.01	-5.01	-0.10	29.60	1-59	0
1	57	SC_CARRIL_REM	LinMoving	Min V3	-0.26	-3.36	-0.01	-5.01	-0.09	32.97	1-60	0
1	58	SC_CARRIL_REM	LinMoving	Min V3	-0.26	-3.36	-0.01	-5.01	-0.09	36.33	1-61	0
1	59	SC_CARRIL_REM	LinMoving	Min V3	-0.26	-3.36	-0.01	-5.01	-0.08	39.69	1-62	0
1	60	SC_CARRIL_REM	LinMoving	Min V3	-0.26	-3.36	-0.01	-5.01	-0.08	43.06	1-63	0
1	61	SC_CARRIL_REM	LinMoving	Min V3	-0.26	-3.36	-0.01	-5.01	-0.07	46.42	1-64	0
1	62	SC_CARRIL_REM	LinMoving	Min V3	-0.26	-3.36	-0.01	-5.01	-0.07	49.78	1-65	0
1	63	SC_CARRIL_REM	LinMoving	Min V3	-0.26	-1.41	-0.01	0.86	-0.06	53.14	1-66	0
1	64	SC_CARRIL_REM	LinMoving	Min V3	-0.26	3.56	-0.01	15.76	-0.06	54.55	1-67	0
1	65	SC_CARRIL_REM	LinMoving	Min V3	-0.26	8.56	-0.01	30.76	-0.05	50.98	1-68	0
1	66	SC_CARRIL_REM	LinMoving	Min V3	-0.26	13.56	-0.01	45.76	-0.05	42.41	1-69	0
1	67	SC_CARRIL_REM	LinMoving	Min V3	-0.26	18.56	-0.01	60.76	-0.04	28.86	1-70	0
1	67.5	SC_CARRIL_REM	LinMoving	Min V3	-0.26	18.56	-0.01	60.76	-0.04	19.60	1-71	0
1	68.5	SC_CARRIL_REM	LinMoving	Min V3	0.00	0.00	0.00	0.00	0.00	0.00	1-72	0
1	0	SC_CARRIL_REM	LinMoving	Max T	0.00	0.00	0.00	0.00	0.00	0.00	1-1	0
1	0.5	SC_CARRIL_REM	LinMoving	Max T	0.00	0.00	0.00	0.00	0.00	-0.05	1-2	0
1	1.5	SC_CARRIL_REM	LinMoving	Max T	-0.02	0.00	0.00	0.37	-0.01	0.06	1-3	0
1	2	SC_CARRIL_REM	LinMoving	Max T	-0.02	0.00	0.00	0.37	-0.01	0.06	1-4	0
1	3	SC_CARRIL_REM	LinMoving	Max T	-0.04	0.19	0.00	0.93	-0.01	4.84	1-5	0
1	4	SC_CARRIL_REM	LinMoving	Max T	-0.07	0.57	0.00	1.83	-0.02	13.82	1-6	0
1	5	SC_CARRIL_REM	LinMoving	Max T	-0.10	1.14	0.00	3.12	-0.03	26.42	1-7	0
1	6	SC_CARRIL_REM	LinMoving	Max T	-0.13	1.90	0.00	4.79	-0.04	42.06	1-8	0
1	7	SC_CARRIL_REM	LinMoving	Max T	-0.17	2.85	0.00	6.85	-0.05	60.17	1-9	0
1	8	SC_CARRIL_REM	LinMoving	Max T	-0.21	3.98	0.00	9.30	-0.05	80.18	1-10	0
1	9	SC_CARRIL_REM	LinMoving	Max T	-0.25	5.30	0.00	12.14	-0.06	101.54	1-11	0
1	10	SC_CARRIL_REM	LinMoving	Max T	-0.29	6.81	0.00	15.36	-0.06	123.69	1-12	0
1	11	SC_CARRIL_REM	LinMoving	Max T	-0.34	8.49	0.00	18.97	-0.06	146.08	1-13	0
1	12	SC_CARRIL_REM	LinMoving	Max T	-0.38	10.36	0.00	22.97	-0.06	168.19	1-14	0
1	13	SC_CARRIL_REM	LinMoving	Max T	-0.42	12.40	0.00	27.36	-0.06	189.49	1-15	0
1	14	SC_CARRIL_REM	LinMoving	Max T	-0.47	14.62	0.00	32.13	-0.05	209.46	1-16	0
1	15	SC_CARRIL_REM	LinMoving	Max T	-0.51	17.02	0.00	37.29	-0.04	227.61	1-17	0
1	16	SC_CARRIL_REM	LinMoving	Max T	-0.56	19.58	0.00	42.84	-0.02	243.44	1-18	0
1	17	SC_CARRIL_REM	LinMoving	Max T	-0.60	22.31	0.00	48.78	0.00	256.48	1-19	0
1	18	SC_CARRIL_REM	LinMoving	Max T	-0.64	25.21	-0.01	55.10	0.03	266.28	1-20	0
1	19	SC_CARRIL_REM	LinMoving	Max T	-0.68	28.27	-0.01	61.81	0.06	272.40	1-21	0
1	20	SC_CARRIL_REM	LinMoving	Max T	-0.71	31.49	-0.01	68.91	0.10	274.40	1-22	0
1	21	SC_CARRIL_REM	LinMoving	Max T	-0.75	34.86	-0.01	76.39	0.14	271.89	1-23	0
1	22	SC_CARRIL_REM	LinMoving	Max T	-0.78	38.38	-0.01	84.26	0.19	264.49	1-24	0
1	23	SC_CARRIL_REM	LinMoving	Max T	-0.81	42.04	-0.02	92.52	0.25	251.82	1-25	0
1	24	SC_CARRIL_REM	LinMoving	Max T	-0.84	45.85	-0.02	101.17	0.32	233.56	1-26	0
1	25	SC_CARRIL_REM	LinMoving	Max T	-0.87	49.79	-0.02	110.21	0.39	209.37	1-27	0
1	26	SC_CARRIL_REM	LinMoving	Max T	-0.89	53.87	-0.02	119.63	0.47	178.96	1-28	0
1	27	SC_CARRIL_REM	LinMoving	Max T	-0.91	58.07	-0.03	129.44	0.56	142.08	1-29	0
1	28	SC_CARRIL_REM	LinMoving	Max T	-0.93	62.39	-0.03	139.63	0.66	98.47	1-30	0
1	29	SC_CARRIL_REM	LinMoving	Max T	-0.94	66.83	-0.03	150.22	0.77	47.91	1-31	0
1	30	SC_CARRIL_REM	LinMoving	Max T	-0.95	71.37	-0.03	161.19	0.89	-9.77	1-32	0
1	31	SC_CARRIL_REM	LinMoving	Max T	-0.96	76.02	-0.04	172.55	1.01	-74.74	1-33	0
1	32	SC_CARRIL_REM	LinMoving	Max T	-0.97	83.33	-0.04	191.49	1.17	-145.84	1-34	0
1	33	SC_CARRIL_REM	LinMoving	Max T	-0.98	88.17	-0.04	203.69	1.32	-226.31	1-35	0
1	33.75	SC_CARRIL_REM	LinMoving	Max T	-0.98	90.53	-0.05	208.93	1.45	-291.81	1-36	0

ESTRUCTURA E1. ESFUERZOS EN TABLERO PARA TODOS LOS CASOS E HIPOTESIS DE CARGA

Frame	Station	OutputCase	CaseType	StepType	P	V2	V3	T	M2	M3	FrameElem	ElemStation
Text	m	Text	Text	Text	KN	KN	KN	KN-m	KN-m	KN-m	Text	m
1	34.5	SC_CARRIL_REM	LinMoving	Max T	-0.23	-10.64	0.05	35.59	1.52	-360.29	1-37	0
1	35.25	SC_CARRIL_REM	LinMoving	Max T	-0.23	-10.63	0.05	37.80	1.61	-351.84	1-38	0
1	36	SC_CARRIL_REM	LinMoving	Max T	-0.23	-10.50	0.05	40.06	1.66	-341.47	1-39	0
1	37	SC_CARRIL_REM	LinMoving	Max T	-0.24	-10.40	0.06	43.16	1.74	-324.53	1-40	0
1	38	SC_CARRIL_REM	LinMoving	Max T	-0.25	-10.14	0.06	46.41	1.78	-305.75	1-41	0
1	39	SC_CARRIL_REM	LinMoving	Max T	-0.26	-9.80	0.06	50.05	1.81	-284.55	1-42	0
1	40	SC_CARRIL_REM	LinMoving	Max T	-0.27	-9.34	0.07	54.08	1.83	-261.07	1-43	0
1	41	SC_CARRIL_REM	LinMoving	Max T	-0.28	-8.78	0.07	58.50	1.85	-235.45	1-44	0
1	42	SC_CARRIL_REM	LinMoving	Max T	-0.30	-8.10	0.07	63.30	1.85	-207.90	1-45	0
1	43	SC_CARRIL_REM	LinMoving	Max T	-0.32	-7.30	0.07	68.49	1.84	-178.62	1-46	0
1	44	SC_CARRIL_REM	LinMoving	Max T	-0.34	-6.38	0.08	74.07	1.83	-147.86	1-47	0
1	45	SC_CARRIL_REM	LinMoving	Max T	-0.37	-5.32	0.08	80.03	1.80	-115.88	1-48	0
1	46	SC_CARRIL_REM	LinMoving	Max T	-0.40	-4.13	0.08	86.39	1.77	-82.98	1-49	0
1	47	SC_CARRIL_REM	LinMoving	Max T	-0.43	-2.79	0.08	93.13	1.73	-49.48	1-50	0
1	48	SC_CARRIL_REM	LinMoving	Max T	-0.46	-1.31	0.09	100.25	1.69	-15.72	1-51	0
1	49	SC_CARRIL_REM	LinMoving	Max T	-0.49	0.32	0.09	107.77	1.63	17.94	1-52	0
1	50	SC_CARRIL_REM	LinMoving	Max T	-0.53	2.10	0.09	115.67	1.57	51.11	1-53	0
1	51	SC_CARRIL_REM	LinMoving	Max T	-0.57	4.04	0.09	123.96	1.51	83.39	1-54	0
1	52	SC_CARRIL_REM	LinMoving	Max T	-0.61	6.15	0.09	132.64	1.44	114.36	1-55	0
1	53	SC_CARRIL_REM	LinMoving	Max T	-0.65	8.41	0.09	141.70	1.36	143.57	1-56	0
1	54	SC_CARRIL_REM	LinMoving	Max T	-0.70	10.85	0.09	151.15	1.28	170.56	1-57	0
1	55	SC_CARRIL_REM	LinMoving	Max T	-0.74	13.45	0.10	160.99	1.20	194.87	1-58	0
1	56	SC_CARRIL_REM	LinMoving	Max T	-0.78	16.23	0.10	171.22	1.11	216.01	1-59	0
1	57	SC_CARRIL_REM	LinMoving	Max T	-0.83	19.19	0.10	181.83	1.02	233.48	1-60	0
1	58	SC_CARRIL_REM	LinMoving	Max T	-0.87	22.32	0.10	192.83	0.93	246.75	1-61	0
1	59	SC_CARRIL_REM	LinMoving	Max T	-0.92	25.64	0.10	204.22	0.83	255.31	1-62	0
1	60	SC_CARRIL_REM	LinMoving	Max T	-0.96	29.13	0.10	215.99	0.73	258.63	1-63	0
1	61	SC_CARRIL_REM	LinMoving	Max T	-1.00	32.81	0.10	228.16	0.63	256.15	1-64	0
1	62	SC_CARRIL_REM	LinMoving	Max T	-1.04	36.68	0.10	240.71	0.52	247.33	1-65	0
1	63	SC_CARRIL_REM	LinMoving	Max T	-1.08	40.73	0.10	253.65	0.42	231.60	1-66	0
1	64	SC_CARRIL_REM	LinMoving	Max T	-1.11	44.97	0.10	266.97	0.31	208.41	1-67	0
1	65	SC_CARRIL_REM	LinMoving	Max T	-1.14	49.40	0.10	280.68	0.21	177.18	1-68	0
1	66	SC_CARRIL_REM	LinMoving	Max T	-1.17	54.02	0.10	294.78	0.10	137.33	1-69	0
1	67	SC_CARRIL_REM	LinMoving	Max T	-1.19	58.83	0.10	309.23	0.00	88.32	1-70	0
1	67.5	SC_CARRIL_REM	LinMoving	Max T	-1.19	58.83	0.10	309.23	-0.05	58.99	1-71	0
1	68.5	SC_CARRIL_REM	LinMoving	Max T	0.00	0.00	0.00	0.00	0.00	0.00	1-72	0
1	0	SC_CARRIL_REM	LinMoving	Min T	0.00	0.00	0.00	0.00	0.00	0.00	1-1	0
1	0.5	SC_CARRIL_REM	LinMoving	Min T	-1.21	-63.83	-0.10	-323.87	-0.15	-2.24	1-2	0
1	1.5	SC_CARRIL_REM	LinMoving	Min T	-1.19	-58.83	-0.10	-309.22	-0.05	58.90	1-3	0
1	2	SC_CARRIL_REM	LinMoving	Min T	-1.19	-58.83	-0.10	-309.22	0.00	88.27	1-4	0
1	3	SC_CARRIL_REM	LinMoving	Min T	-1.17	-54.02	-0.10	-294.78	0.10	137.33	1-5	0
1	4	SC_CARRIL_REM	LinMoving	Min T	-1.14	-49.40	-0.10	-280.68	0.21	177.18	1-6	0
1	5	SC_CARRIL_REM	LinMoving	Min T	-1.11	-44.97	-0.10	-266.97	0.31	208.41	1-7	0
1	6	SC_CARRIL_REM	LinMoving	Min T	-1.08	-40.73	-0.10	-253.65	0.42	231.60	1-8	0
1	7	SC_CARRIL_REM	LinMoving	Min T	-1.04	-36.68	-0.10	-240.71	0.52	247.33	1-9	0
1	8	SC_CARRIL_REM	LinMoving	Min T	-1.00	-32.81	-0.10	-228.16	0.63	256.15	1-10	0
1	9	SC_CARRIL_REM	LinMoving	Min T	-0.96	-29.13	-0.10	-215.99	0.73	258.63	1-11	0
1	10	SC_CARRIL_REM	LinMoving	Min T	-0.92	-25.64	-0.10	-204.22	0.83	255.31	1-12	0
1	11	SC_CARRIL_REM	LinMoving	Min T	-0.87	-22.32	-0.10	-192.83	0.92	246.75	1-13	0
1	12	SC_CARRIL_REM	LinMoving	Min T	-0.83	-19.19	-0.10	-181.83	1.02	233.48	1-14	0
1	13	SC_CARRIL_REM	LinMoving	Min T	-0.78	-16.23	-0.10	-171.22	1.11	216.01	1-15	0
1	14	SC_CARRIL_REM	LinMoving	Min T	-0.74	-13.45	-0.10	-160.99	1.20	194.87	1-16	0
1	15	SC_CARRIL_REM	LinMoving	Min T	-0.70	-10.85	-0.09	-151.15	1.28	170.56	1-17	0
1	16	SC_CARRIL_REM	LinMoving	Min T	-0.65	-8.41	-0.09	-141.70	1.36	143.57	1-18	0
1	17	SC_CARRIL_REM	LinMoving	Min T	-0.61	-6.15	-0.09	-132.63	1.44	114.36	1-19	0
1	18	SC_CARRIL_REM	LinMoving	Min T	-0.57	-4.04	-0.09	-123.96	1.51	83.39	1-20	0
1	19	SC_CARRIL_REM	LinMoving	Min T	-0.53	-2.10	-0.09	-115.67	1.57	51.11	1-21	0
1	20	SC_CARRIL_REM	LinMoving	Min T	-0.49	-0.32	-0.09	-107.77	1.63	17.94	1-22	0
1	21	SC_CARRIL_REM	LinMoving	Min T	-0.46	1.31	-0.09	-100.25	1.68	-15.72	1-23	0
1	22	SC_CARRIL_REM	LinMoving	Min T	-0.43	2.79	-0.08	-93.12	1.73	-49.48	1-24	0
1	23	SC_CARRIL_REM	LinMoving	Min T	-0.40	4.13	-0.08	-86.39	1.77	-82.98	1-25	0
1	24	SC_CARRIL_REM	LinMoving	Min T	-0.37	5.32	-0.08	-80.03	1.80	-115.88	1-26	0
1	25	SC_CARRIL_REM	LinMoving	Min T	-0.34	6.38	-0.08	-74.07	1.82	-147.86	1-27	0
1	26	SC_CARRIL_REM	LinMoving	Min T	-0.32	7.30	-0.07	-68.49	1.84	-178.62	1-28	0
1	27	SC_CARRIL_REM	LinMoving	Min T	-0.30	8.10	-0.07	-63.30	1.85	-207.90	1-29	0
1	28	SC_CARRIL_REM	LinMoving	Min T	-0.28	8.78	-0.07	-58.50	1.84	-235.45	1-30	0
1	29	SC_CARRIL_REM	LinMoving	Min T	-0.27	9.34	-0.07	-54.08	1.83	-261.07	1-31	0
1	30	SC_CARRIL_REM	LinMoving	Min T	-0.26	9.80	-0.06	-50.05	1.81	-284.55	1-32	0
1	31	SC_CARRIL_REM	LinMoving	Min T	-0.25	10.14	-0.06	-46.41	1.78	-305.75	1-33	0
1	32	SC_CARRIL_REM	LinMoving	Min T	-0.24	10.34	-0.06	-42.85	1.72	-325.81	1-34	0
1	33	SC_CARRIL_REM	LinMoving	Min T	-0.23	10.50	-0.05	-40.06	1.66	-341.46	1-35	0
1	33.75	SC_CARRIL_REM	LinMoving	Min T	-0.23	10.63	-0.05	-37.80	1.61	-351.84	1-36	0
1	34.5	SC_CARRIL_REM	LinMoving	Min T	-0.98	-95.53	0.05	-221.72	1.61	-361.73	1-37	0
1	35.25	SC_CARRIL_REM	LinMoving	Min T	-0.98	-90.53	0.05	-208.93	1.45	-291.81	1-38	0
1	36	SC_CARRIL_REM	LinMoving	Min T	-0.98	-88.17	0.04	-203.69	1.32	-226.35	1-39	0
1	37	SC_CARRIL_REM	LinMoving	Min T	-0.97	-80.77	0.04	-184.29	1.15	-147.12	1-40	0
1	38	SC_CARRIL_REM	LinMoving	Min T	-0.96	-76.02	0.04	-172.55	1.01	-74.74	1-41	0
1	39	SC_CARRIL_REM	LinMoving	Min T	-0.95	-71.37	0.03	-161.19	0.88	-9.77	1-42	0
1	40	SC_CARRIL_REM	LinMoving	Min T	-0.94	-66.83	0.03	-150.22	0.77	47.91	1-43	0
1	41	SC_CARRIL_REM	LinMoving	Min T	-0.93	-62.39	0.03	-139.63	0.66	98.47	1-44	0
1	42	SC_CARRIL_REM	LinMoving	Min T	-0.91	-58.07	0.03	-129.44	0.56	142.08	1-45	0

ESTRUCTURA E1. ESFUERZOS EN TABLERO PARA TODOS LOS CASOS E HIPOTESIS DE CARGA

Frame	Station	OutputCase	CaseType	StepType	P	V2	V3	T	M2	M3	FrameElem	ElemStation
Text	m	Text	Text	Text	KN	KN	KN	KN-m	KN-m	KN-m	Text	m
1	43	SC_CARRIL_REM	LinMoving	Min T	-0.89	-53.87	0.02	-119.63	0.47	178.97	1-46	0
1	44	SC_CARRIL_REM	LinMoving	Min T	-0.87	-49.79	0.02	-110.20	0.39	209.37	1-47	0
1	45	SC_CARRIL_REM	LinMoving	Min T	-0.84	-45.85	0.02	-101.17	0.31	233.56	1-48	0
1	46	SC_CARRIL_REM	LinMoving	Min T	-0.81	-42.04	0.02	-92.52	0.25	251.82	1-49	0
1	47	SC_CARRIL_REM	LinMoving	Min T	-0.78	-38.38	0.01	-84.26	0.19	264.49	1-50	0
1	48	SC_CARRIL_REM	LinMoving	Min T	-0.75	-34.86	0.01	-76.39	0.14	271.89	1-51	0
1	49	SC_CARRIL_REM	LinMoving	Min T	-0.71	-31.49	0.01	-68.91	0.10	274.40	1-52	0
1	50	SC_CARRIL_REM	LinMoving	Min T	-0.68	-28.27	0.01	-61.81	0.06	272.40	1-53	0
1	51	SC_CARRIL_REM	LinMoving	Min T	-0.64	-25.21	0.01	-55.10	0.03	266.28	1-54	0
1	52	SC_CARRIL_REM	LinMoving	Min T	-0.60	-22.31	0.00	-48.78	0.00	256.48	1-55	0
1	53	SC_CARRIL_REM	LinMoving	Min T	-0.56	-19.58	0.00	-42.84	-0.02	243.44	1-56	0
1	54	SC_CARRIL_REM	LinMoving	Min T	-0.51	-17.02	0.00	-37.29	-0.04	227.61	1-57	0
1	55	SC_CARRIL_REM	LinMoving	Min T	-0.47	-14.62	0.00	-32.13	-0.05	209.46	1-58	0
1	56	SC_CARRIL_REM	LinMoving	Min T	-0.42	-12.40	0.00	-27.36	-0.06	189.49	1-59	0
1	57	SC_CARRIL_REM	LinMoving	Min T	-0.38	-10.36	0.00	-22.97	-0.06	168.19	1-60	0
1	58	SC_CARRIL_REM	LinMoving	Min T	-0.34	-8.49	0.00	-18.97	-0.06	146.08	1-61	0
1	59	SC_CARRIL_REM	LinMoving	Min T	-0.29	-6.81	0.00	-15.36	-0.06	123.69	1-62	0
1	60	SC_CARRIL_REM	LinMoving	Min T	-0.25	-5.30	0.00	-12.14	-0.06	101.54	1-63	0
1	61	SC_CARRIL_REM	LinMoving	Min T	-0.21	-3.98	0.00	-9.30	-0.05	80.18	1-64	0
1	62	SC_CARRIL_REM	LinMoving	Min T	-0.17	-2.85	0.00	-6.85	-0.05	60.17	1-65	0
1	63	SC_CARRIL_REM	LinMoving	Min T	-0.13	-1.90	0.00	-4.79	-0.04	42.06	1-66	0
1	64	SC_CARRIL_REM	LinMoving	Min T	-0.10	-1.14	0.00	-3.12	-0.03	26.42	1-67	0
1	65	SC_CARRIL_REM	LinMoving	Min T	-0.07	-0.57	0.00	-1.83	-0.02	13.82	1-68	0
1	66	SC_CARRIL_REM	LinMoving	Min T	-0.04	-0.19	0.00	-0.93	-0.01	4.84	1-69	0
1	67	SC_CARRIL_REM	LinMoving	Min T	-0.02	0.00	0.00	-0.37	-0.01	0.06	1-70	0
1	67.5	SC_CARRIL_REM	LinMoving	Min T	-0.02	0.00	0.00	-0.37	-0.01	0.06	1-71	0
1	68.5	SC_CARRIL_REM	LinMoving	Min T	0.00	-2.50	0.00	-7.50	0.00	-1.25	1-72	0
1	0	SC_CARRIL_REM	LinMoving	Max M2	0.00	0.00	0.00	0.00	0.00	0.00	1-1	0
1	0.5	SC_CARRIL_REM	LinMoving	Max M2	0.00	0.00	0.00	0.00	0.00	0.00	1-2	0
1	1.5	SC_CARRIL_REM	LinMoving	Max M2	-0.14	3.79	-0.08	-67.60	0.04	-3.92	1-3	0
1	2	SC_CARRIL_REM	LinMoving	Max M2	-0.27	0.24	-0.09	-92.03	0.08	-0.62	1-4	0
1	3	SC_CARRIL_REM	LinMoving	Max M2	-0.44	-6.77	-0.09	-126.29	0.17	16.49	1-5	0
1	4	SC_CARRIL_REM	LinMoving	Max M2	-0.55	-12.12	-0.10	-148.66	0.26	41.89	1-6	0
1	5	SC_CARRIL_REM	LinMoving	Max M2	-0.63	-16.12	-0.10	-164.23	0.36	71.91	1-7	0
1	6	SC_CARRIL_REM	LinMoving	Max M2	-0.68	-19.16	-0.10	-175.65	0.46	104.73	1-8	0
1	7	SC_CARRIL_REM	LinMoving	Max M2	-0.72	-21.55	-0.10	-184.36	0.56	139.36	1-9	0
1	8	SC_CARRIL_REM	LinMoving	Max M2	-0.74	-23.46	-0.10	-191.22	0.66	175.21	1-10	0
1	9	SC_CARRIL_REM	LinMoving	Max M2	-0.77	-25.02	-0.10	-196.76	0.76	211.95	1-11	0
1	10	SC_CARRIL_REM	LinMoving	Max M2	-0.79	-26.13	-0.10	-200.74	0.86	249.13	1-12	0
1	11	SC_CARRIL_REM	LinMoving	Max M2	-0.80	-21.88	-0.10	-188.51	0.96	280.71	1-13	0
1	12	SC_CARRIL_REM	LinMoving	Max M2	-0.81	-16.42	-0.10	-172.57	1.06	304.57	1-14	0
1	13	SC_CARRIL_REM	LinMoving	Max M2	-0.82	-11.05	-0.10	-156.80	1.16	321.39	1-15	0
1	14	SC_CARRIL_REM	LinMoving	Max M2	-0.83	-5.73	-0.10	-141.14	1.26	331.66	1-16	0
1	15	SC_CARRIL_REM	LinMoving	Max M2	-0.84	-0.46	-0.10	-125.59	1.37	335.72	1-17	0
1	16	SC_CARRIL_REM	LinMoving	Max M2	-0.85	4.77	-0.10	-110.11	1.47	333.81	1-18	0
1	17	SC_CARRIL_REM	LinMoving	Max M2	-0.85	9.97	-0.10	-94.69	1.57	326.12	1-19	0
1	18	SC_CARRIL_REM	LinMoving	Max M2	-0.86	15.15	-0.10	-79.33	1.67	312.79	1-20	0
1	19	SC_CARRIL_REM	LinMoving	Max M2	-0.87	20.31	-0.10	-64.00	1.77	293.94	1-21	0
1	20	SC_CARRIL_REM	LinMoving	Max M2	-0.87	25.45	-0.10	-48.71	1.87	269.65	1-22	0
1	21	SC_CARRIL_REM	LinMoving	Max M2	-0.87	30.58	-0.10	-33.45	1.97	239.98	1-23	0
1	22	SC_CARRIL_REM	LinMoving	Max M2	-0.88	35.69	-0.10	-18.22	2.07	205.00	1-24	0
1	23	SC_CARRIL_REM	LinMoving	Max M2	-0.88	40.79	-0.10	-3.01	2.17	164.74	1-25	0
1	24	SC_CARRIL_REM	LinMoving	Max M2	-0.88	45.88	-0.10	12.18	2.28	119.25	1-26	0
1	25	SC_CARRIL_REM	LinMoving	Max M2	-0.89	50.97	-0.10	27.36	2.38	68.55	1-27	0
1	26	SC_CARRIL_REM	LinMoving	Max M2	-0.89	56.05	-0.10	42.52	2.48	12.68	1-28	0
1	27	SC_CARRIL_REM	LinMoving	Max M2	-0.89	61.12	-0.10	57.66	2.58	-48.35	1-29	0
1	28	SC_CARRIL_REM	LinMoving	Max M2	-0.89	66.18	-0.10	72.80	2.68	-114.53	1-30	0
1	29	SC_CARRIL_REM	LinMoving	Max M2	-0.90	71.25	-0.10	87.93	2.78	-185.82	1-31	0
1	30	SC_CARRIL_REM	LinMoving	Max M2	-0.90	76.30	-0.10	103.04	2.88	-262.23	1-32	0
1	31	SC_CARRIL_REM	LinMoving	Max M2	-0.90	81.36	-0.10	118.15	2.99	-343.73	1-33	0
1	32	SC_CARRIL_REM	LinMoving	Max M2	-0.90	88.90	-0.10	140.75	3.09	-430.33	1-34	0
1	33	SC_CARRIL_REM	LinMoving	Max M2	-0.90	93.95	-0.10	155.85	3.19	-521.97	1-35	0
1	33.75	SC_CARRIL_REM	LinMoving	Max M2	-0.90	96.48	-0.10	163.41	3.26	-594.52	1-36	0
1	34.5	SC_CARRIL_REM	LinMoving	Max M2	-0.90	-101.50	0.10	-178.42	3.34	-669.61	1-37	0
1	35.25	SC_CARRIL_REM	LinMoving	Max M2	-0.90	-96.47	0.10	-163.35	3.26	-594.54	1-38	0
1	36	SC_CARRIL_REM	LinMoving	Max M2	-0.90	-93.93	0.10	-155.79	3.19	-522.03	1-39	0
1	37	SC_CARRIL_REM	LinMoving	Max M2	-0.90	-86.39	0.10	-133.20	3.09	-430.37	1-40	0
1	38	SC_CARRIL_REM	LinMoving	Max M2	-0.90	-81.34	0.10	-118.09	2.99	-343.80	1-41	0
1	39	SC_CARRIL_REM	LinMoving	Max M2	-0.90	-76.28	0.10	-102.99	2.88	-262.31	1-42	0
1	40	SC_CARRIL_REM	LinMoving	Max M2	-0.89	-71.23	0.10	-87.87	2.78	-185.92	1-43	0
1	41	SC_CARRIL_REM	LinMoving	Max M2	-0.89	-66.17	0.10	-72.74	2.68	-114.65	1-44	0
1	42	SC_CARRIL_REM	LinMoving	Max M2	-0.89	-61.10	0.10	-57.61	2.58	-48.49	1-45	0
1	43	SC_CARRIL_REM	LinMoving	Max M2	-0.89	-56.03	0.10	-42.46	2.48	12.52	1-46	0
1	44	SC_CARRIL_REM	LinMoving	Max M2	-0.89	-50.95	0.10	-27.30	2.38	68.38	1-47	0
1	45	SC_CARRIL_REM	LinMoving	Max M2	-0.88	-45.87	0.10	-12.12	2.28	119.05	1-48	0
1	46	SC_CARRIL_REM	LinMoving	Max M2	-0.88	-40.77	0.10	3.07	2.17	164.53	1-49	0
1	47	SC_CARRIL_REM	LinMoving	Max M2	-0.88	-35.67	0.10	18.28	2.07	204.76	1-50	0
1	48	SC_CARRIL_REM	LinMoving	Max M2	-0.87	-30.56	0.10	33.51	1.97	239.73	1-51	0
1	49	SC_CARRIL_REM	LinMoving	Max M2	-0.87	-25.43	0.10	48.77	1.87	269.38	1-52	0
1	50	SC_CARRIL_REM	LinMoving	Max M2	-0.86	-20.29	0.10	64.06	1.77	293.65	1-53	0
1	51	SC_CARRIL_REM	LinMoving	Max M2	-0.86	-15.13	0.10	79.38	1.67	312.49	1-54	0

ESTRUCTURA E1. ESFUERZOS EN TABLERO PARA TODOS LOS CASOS E HIPOTESIS DE CARGA

Frame	Station	OutputCase	CaseType	StepType	P	V2	V3	T	M2	M3	FrameElem	ElemStation
Text	m	Text	Text	Text	KN	KN	KN	KN-m	KN-m	KN-m	Text	m
1	52	SC_CARRIL_REM	LinMoving	Max M2	-0.85	-9.96	0.10	94.75	1.57	325.80	1-55	0
1	53	SC_CARRIL_REM	LinMoving	Max M2	-0.85	-4.75	0.10	110.17	1.47	333.47	1-56	0
1	54	SC_CARRIL_REM	LinMoving	Max M2	-0.84	0.48	0.10	125.65	1.37	335.36	1-57	0
1	55	SC_CARRIL_REM	LinMoving	Max M2	-0.83	5.75	0.10	141.20	1.26	331.29	1-58	0
1	56	SC_CARRIL_REM	LinMoving	Max M2	-0.82	11.07	0.10	156.85	1.16	321.01	1-59	0
1	57	SC_CARRIL_REM	LinMoving	Max M2	-0.81	16.44	0.10	172.63	1.06	304.17	1-60	0
1	58	SC_CARRIL_REM	LinMoving	Max M2	-0.80	21.89	0.10	188.56	0.96	280.30	1-61	0
1	59	SC_CARRIL_REM	LinMoving	Max M2	-0.79	26.10	0.10	200.66	0.86	248.71	1-62	0
1	60	SC_CARRIL_REM	LinMoving	Max M2	-0.77	24.98	0.10	196.64	0.76	211.59	1-63	0
1	61	SC_CARRIL_REM	LinMoving	Max M2	-0.74	23.42	0.10	191.12	0.66	174.93	1-64	0
1	62	SC_CARRIL_REM	LinMoving	Max M2	-0.72	21.51	0.10	184.27	0.56	139.15	1-65	0
1	63	SC_CARRIL_REM	LinMoving	Max M2	-0.68	19.14	0.10	175.58	0.46	104.59	1-66	0
1	64	SC_CARRIL_REM	LinMoving	Max M2	-0.63	16.10	0.10	164.19	0.36	71.83	1-67	0
1	65	SC_CARRIL_REM	LinMoving	Max M2	-0.55	12.11	0.10	148.65	0.26	41.85	1-68	0
1	66	SC_CARRIL_REM	LinMoving	Max M2	-0.44	6.76	0.09	126.32	0.17	16.48	1-69	0
1	67	SC_CARRIL_REM	LinMoving	Max M2	-0.27	-0.24	0.09	92.10	0.08	-0.61	1-70	0
1	67.5	SC_CARRIL_REM	LinMoving	Max M2	-0.14	-3.80	0.08	67.69	0.04	-3.92	1-71	0
1	68.5	SC_CARRIL_REM	LinMoving	Max M2	0.00	0.00	0.00	0.00	0.00	0.00	1-72	0
1	0	SC_CARRIL_REM	LinMoving	Min M2	0.00	0.00	0.00	0.00	0.00	0.00	1-1	0
1	0.5	SC_CARRIL_REM	LinMoving	Min M2	-1.21	-63.83	-0.10	-323.86	-0.15	-2.29	1-2	0
1	1.5	SC_CARRIL_REM	LinMoving	Min M2	-1.07	-62.62	-0.02	-241.25	-0.09	62.88	1-3	0
1	2	SC_CARRIL_REM	LinMoving	Min M2	-0.94	-59.07	-0.01	-216.82	-0.09	88.95	1-4	0
1	3	SC_CARRIL_REM	LinMoving	Min M2	-0.77	-47.06	0.00	-167.57	-0.08	125.68	1-5	0
1	4	SC_CARRIL_REM	LinMoving	Min M2	-0.66	-36.71	0.00	-130.20	-0.08	149.11	1-6	0
1	5	SC_CARRIL_REM	LinMoving	Min M2	-0.58	-27.71	0.00	-99.63	-0.08	162.92	1-7	0
1	6	SC_CARRIL_REM	LinMoving	Min M2	-0.53	-19.67	0.00	-73.21	-0.08	168.93	1-8	0
1	7	SC_CARRIL_REM	LinMoving	Min M2	-0.49	-12.28	0.00	-49.50	-0.08	168.14	1-9	0
1	8	SC_CARRIL_REM	LinMoving	Min M2	-0.46	-5.37	0.00	-27.64	-0.09	161.12	1-10	0
1	9	SC_CARRIL_REM	LinMoving	Min M2	-0.44	1.19	0.00	-7.10	-0.09	148.22	1-11	0
1	10	SC_CARRIL_REM	LinMoving	Min M2	-0.42	7.30	0.00	11.89	-0.10	129.88	1-12	0
1	11	SC_CARRIL_REM	LinMoving	Min M2	-0.41	8.05	0.00	14.65	-0.10	112.13	1-13	0
1	12	SC_CARRIL_REM	LinMoving	Min M2	-0.40	7.59	0.00	13.72	-0.10	97.10	1-14	0
1	13	SC_CARRIL_REM	LinMoving	Min M2	-0.38	7.22	0.00	12.94	-0.11	84.11	1-15	0
1	14	SC_CARRIL_REM	LinMoving	Min M2	-0.38	6.90	0.00	12.29	-0.11	72.67	1-16	0
1	15	SC_CARRIL_REM	LinMoving	Min M2	-0.37	6.63	0.00	11.73	-0.12	62.45	1-17	0
1	16	SC_CARRIL_REM	LinMoving	Min M2	-0.36	6.40	0.00	11.25	-0.12	53.20	1-18	0
1	17	SC_CARRIL_REM	LinMoving	Min M2	-0.35	6.20	0.00	10.83	-0.13	44.72	1-19	0
1	18	SC_CARRIL_REM	LinMoving	Min M2	-0.35	6.02	0.00	10.47	-0.13	36.88	1-20	0
1	19	SC_CARRIL_REM	LinMoving	Min M2	-0.34	5.86	0.00	10.14	-0.14	29.57	1-21	0
1	20	SC_CARRIL_REM	LinMoving	Min M2	-0.34	5.72	0.00	9.85	-0.14	22.69	1-22	0
1	21	SC_CARRIL_REM	LinMoving	Min M2	-0.34	5.59	0.00	9.59	-0.14	16.19	1-23	0
1	22	SC_CARRIL_REM	LinMoving	Min M2	-0.33	5.48	0.00	9.36	-0.15	10.01	1-24	0
1	23	SC_CARRIL_REM	LinMoving	Min M2	-0.33	5.38	0.00	9.15	-0.15	4.10	1-25	0
1	24	SC_CARRIL_REM	LinMoving	Min M2	-0.33	5.29	0.00	8.96	-0.16	-1.57	1-26	0
1	25	SC_CARRIL_REM	LinMoving	Min M2	-0.32	5.20	0.00	8.78	-0.16	-7.04	1-27	0
1	26	SC_CARRIL_REM	LinMoving	Min M2	-0.32	5.12	0.00	8.62	-0.17	-12.84	1-28	0
1	27	SC_CARRIL_REM	LinMoving	Min M2	-0.32	5.05	0.00	8.47	-0.17	-17.47	1-29	0
1	28	SC_CARRIL_REM	LinMoving	Min M2	-0.32	4.98	0.00	8.34	-0.18	-22.46	1-30	0
1	29	SC_CARRIL_REM	LinMoving	Min M2	-0.31	4.92	0.00	8.21	-0.18	-27.83	1-31	0
1	30	SC_CARRIL_REM	LinMoving	Min M2	-0.31	4.87	0.00	8.09	-0.19	-32.09	1-32	0
1	31	SC_CARRIL_REM	LinMoving	Min M2	-0.31	4.81	0.00	7.98	-0.19	-36.75	1-33	0
1	32	SC_CARRIL_REM	LinMoving	Min M2	-0.31	4.76	0.00	7.88	-0.20	-41.33	1-34	0
1	33	SC_CARRIL_REM	LinMoving	Min M2	-0.31	4.72	0.00	7.78	-0.20	-45.81	1-35	0
1	33.75	SC_CARRIL_REM	LinMoving	Min M2	-0.31	4.68	0.00	7.72	-0.21	-49.13	1-36	0
1	34.5	SC_CARRIL_REM	LinMoving	Min M2	-0.31	-4.67	0.00	-7.71	-0.21	-52.41	1-37	0
1	35.25	SC_CARRIL_REM	LinMoving	Min M2	-0.31	-4.70	0.00	-7.77	-0.21	-49.11	1-38	0
1	36	SC_CARRIL_REM	LinMoving	Min M2	-0.31	-4.74	0.00	-7.84	-0.20	-45.79	1-39	0
1	37	SC_CARRIL_REM	LinMoving	Min M2	-0.31	-4.78	0.00	-7.94	-0.20	-41.28	1-40	0
1	38	SC_CARRIL_REM	LinMoving	Min M2	-0.31	-4.83	0.00	-8.04	-0.19	-36.69	1-41	0
1	39	SC_CARRIL_REM	LinMoving	Min M2	-0.31	-4.88	0.00	-8.15	-0.19	-32.01	1-42	0
1	40	SC_CARRIL_REM	LinMoving	Min M2	-0.31	-4.94	0.00	-8.27	-0.18	-27.23	1-43	0
1	41	SC_CARRIL_REM	LinMoving	Min M2	-0.32	-5.00	0.00	-8.39	-0.18	-22.34	1-44	0
1	42	SC_CARRIL_REM	LinMoving	Min M2	-0.32	-5.07	0.00	-8.53	-0.17	-17.33	1-45	0
1	43	SC_CARRIL_REM	LinMoving	Min M2	-0.32	-5.14	0.00	-8.68	-0.17	-12.18	1-46	0
1	44	SC_CARRIL_REM	LinMoving	Min M2	-0.32	-5.22	0.00	-8.84	-0.16	-6.87	1-47	0
1	45	SC_CARRIL_REM	LinMoving	Min M2	-0.33	-5.30	0.00	-9.01	-0.16	-1.38	1-48	0
1	46	SC_CARRIL_REM	LinMoving	Min M2	-0.33	-5.40	0.00	-9.21	-0.15	4.32	1-49	0
1	47	SC_CARRIL_REM	LinMoving	Min M2	-0.33	-5.50	0.00	-9.42	-0.15	10.24	1-50	0
1	48	SC_CARRIL_REM	LinMoving	Min M2	-0.34	-5.61	0.00	-9.65	-0.14	16.45	1-51	0
1	49	SC_CARRIL_REM	LinMoving	Min M2	-0.34	-5.74	0.00	-9.91	-0.14	22.96	1-52	0
1	50	SC_CARRIL_REM	LinMoving	Min M2	-0.34	-5.88	0.00	-10.20	-0.14	29.85	1-53	0
1	51	SC_CARRIL_REM	LinMoving	Min M2	-0.35	-6.04	0.00	-10.52	-0.13	37.18	1-54	0
1	52	SC_CARRIL_REM	LinMoving	Min M2	-0.35	-6.21	0.00	-10.89	-0.13	45.04	1-55	0
1	53	SC_CARRIL_REM	LinMoving	Min M2	-0.36	-6.42	0.00	-11.31	-0.12	53.54	1-56	0
1	54	SC_CARRIL_REM	LinMoving	Min M2	-0.37	-6.65	0.00	-11.79	-0.12	62.81	1-57	0
1	55	SC_CARRIL_REM	LinMoving	Min M2	-0.38	-6.92	0.00	-12.34	-0.11	73.05	1-58	0
1	56	SC_CARRIL_REM	LinMoving	Min M2	-0.39	-7.23	0.00	-13.00	-0.11	84.50	1-59	0
1	57	SC_CARRIL_REM	LinMoving	Min M2	-0.40	-7.61	0.00	-13.77	-0.10	97.50	1-60	0
1	58	SC_CARRIL_REM	LinMoving	Min M2	-0.41	-8.06	0.00	-14.71	-0.10	112.54	1-61	0
1	59	SC_CARRIL_REM	LinMoving	Min M2	-0.42	-7.27	0.00	-11.81	-0.10	130.29	1-62	0
1	60	SC_CARRIL_REM	LinMoving	Min M2	-0.44	-1.15	0.00	7.22	-0.09	148.58	1-63	0

ESTRUCTURA E1. ESFUERZOS EN TABLERO PARA TODOS LOS CASOS E HIPOTESIS DE CARGA

Frame	Station	OutputCase	CaseType	StepType	P	V2	V3	T	M2	M3	FrameElem	ElemStation
Text	m	Text	Text	Text	KN	KN	KN	KN-m	KN-m	KN-m	Text	m
1	61	SC_CARRIL_REM	LinMoving	Min M2	-0.46	5.41	0.00	27.74	-0.09	161.40	1-64	0
1	62	SC_CARRIL_REM	LinMoving	Min M2	-0.49	12.32	0.00	49.58	-0.08	168.35	1-65	0
1	63	SC_CARRIL_REM	LinMoving	Min M2	-0.53	19.69	0.00	73.27	-0.08	169.08	1-66	0
1	64	SC_CARRIL_REM	LinMoving	Min M2	-0.58	27.73	0.00	99.66	-0.08	163.01	1-67	0
1	65	SC_CARRIL_REM	LinMoving	Min M2	-0.66	36.72	0.00	130.21	-0.08	149.15	1-68	0
1	66	SC_CARRIL_REM	LinMoving	Min M2	-0.77	47.07	0.00	167.54	-0.08	125.69	1-69	0
1	67	SC_CARRIL_REM	LinMoving	Min M2	-0.94	59.07	0.01	216.75	-0.09	88.99	1-70	0
1	67.5	SC_CARRIL_REM	LinMoving	Min M2	-1.07	62.63	0.02	241.17	-0.09	62.96	1-71	0
1	68.5	SC_CARRIL_REM	LinMoving	Min M2	0.00	0.00	0.00	0.00	0.00	0.00	1-72	0
1	0	SC_CARRIL_REM	LinMoving	Max M3	0.00	0.00	0.00	0.00	0.00	0.00	1-1	0
1	0.5	SC_CARRIL_REM	LinMoving	Max M3	0.03	3.33	-0.03	-19.68	-0.01	0.03	1-2	0
1	1.5	SC_CARRIL_REM	LinMoving	Max M3	-0.97	-69.40	-0.05	-272.66	-0.07	70.38	1-3	0
1	2	SC_CARRIL_REM	LinMoving	Max M3	-0.97	-69.40	-0.05	-272.67	-0.04	105.04	1-4	0
1	3	SC_CARRIL_REM	LinMoving	Max M3	-0.97	-64.40	-0.05	-257.67	0.01	169.45	1-5	0
1	4	SC_CARRIL_REM	LinMoving	Max M3	-0.97	-59.40	-0.05	-242.68	0.06	228.86	1-6	0
1	5	SC_CARRIL_REM	LinMoving	Max M3	-0.97	-54.40	-0.05	-227.68	0.10	283.27	1-7	0
1	6	SC_CARRIL_REM	LinMoving	Max M3	-0.97	-49.40	-0.05	-212.68	0.15	332.68	1-8	0
1	7	SC_CARRIL_REM	LinMoving	Max M3	-0.97	-44.40	-0.05	-197.68	0.20	377.08	1-9	0
1	8	SC_CARRIL_REM	LinMoving	Max M3	-0.97	-39.41	-0.05	-182.68	0.25	416.49	1-10	0
1	9	SC_CARRIL_REM	LinMoving	Max M3	-0.97	-34.41	-0.05	-167.69	0.30	450.90	1-11	0
1	10	SC_CARRIL_REM	LinMoving	Max M3	-0.97	-29.41	-0.05	-152.69	0.35	480.31	1-12	0
1	11	SC_CARRIL_REM	LinMoving	Max M3	-0.98	-24.41	-0.05	-137.69	0.40	504.72	1-13	0
1	12	SC_CARRIL_REM	LinMoving	Max M3	-0.98	-19.41	-0.05	-122.69	0.45	524.13	1-14	0
1	13	SC_CARRIL_REM	LinMoving	Max M3	-0.98	-14.41	-0.05	-107.69	0.50	538.53	1-15	0
1	14	SC_CARRIL_REM	LinMoving	Max M3	-0.98	-9.41	-0.05	-92.69	0.55	547.94	1-16	0
1	15	SC_CARRIL_REM	LinMoving	Max M3	-0.98	-4.41	-0.05	-77.69	0.60	552.35	1-17	0
1	16	SC_CARRIL_REM	LinMoving	Max M3	-0.98	0.59	-0.05	-62.69	0.65	551.76	1-18	0
1	17	SC_CARRIL_REM	LinMoving	Max M3	-0.98	5.59	-0.05	-47.69	0.70	546.17	1-19	0
1	18	SC_CARRIL_REM	LinMoving	Max M3	-0.97	10.59	-0.05	-32.69	0.75	535.58	1-20	0
1	19	SC_CARRIL_REM	LinMoving	Max M3	-0.97	15.59	-0.05	-17.70	0.80	519.99	1-21	0
1	20	SC_CARRIL_REM	LinMoving	Max M3	-0.97	20.59	-0.05	-2.70	0.85	499.39	1-22	0
1	21	SC_CARRIL_REM	LinMoving	Max M3	-0.97	25.59	-0.05	12.30	0.90	473.80	1-23	0
1	22	SC_CARRIL_REM	LinMoving	Max M3	-0.97	30.59	-0.05	27.30	0.95	443.21	1-24	0
1	23	SC_CARRIL_REM	LinMoving	Max M3	-0.97	35.59	-0.05	42.30	1.00	407.62	1-25	0
1	24	SC_CARRIL_REM	LinMoving	Max M3	-0.97	40.59	-0.05	57.29	1.05	367.03	1-26	0
1	25	SC_CARRIL_REM	LinMoving	Max M3	-0.97	45.59	-0.05	72.29	1.10	321.44	1-27	0
1	26	SC_CARRIL_REM	LinMoving	Max M3	-0.97	50.59	-0.05	87.27	1.15	270.85	1-28	0
1	27	SC_CARRIL_REM	LinMoving	Max M3	-0.97	55.59	-0.05	102.22	1.21	215.26	1-29	0
1	28	SC_CARRIL_REM	LinMoving	Max M3	-0.71	54.33	-0.05	103.23	1.33	155.80	1-30	0
1	29	SC_CARRIL_REM	LinMoving	Max M3	-0.37	41.67	-0.04	80.05	1.20	105.43	1-31	0
1	30	SC_CARRIL_REM	LinMoving	Max M3	-0.20	30.71	-0.04	59.51	1.02	66.88	1-32	0
1	31	SC_CARRIL_REM	LinMoving	Max M3	-0.10	21.28	-0.03	41.37	0.81	38.52	1-33	0
1	32	SC_CARRIL_REM	LinMoving	Max M3	-0.05	15.68	-0.02	32.83	0.58	18.92	1-34	0
1	33	SC_CARRIL_REM	LinMoving	Max M3	-0.03	8.74	-0.01	18.67	0.35	6.81	1-35	0
1	33.75	SC_CARRIL_REM	LinMoving	Max M3	-0.02	3.00	-0.01	5.50	0.17	1.49	1-36	0
1	34.5	SC_CARRIL_REM	LinMoving	Max M3	-0.01	0.03	0.00	-0.13	-0.02	0.28	1-37	0
1	35.25	SC_CARRIL_REM	LinMoving	Max M3	-0.02	-3.00	0.01	-5.50	0.17	1.49	1-38	0
1	36	SC_CARRIL_REM	LinMoving	Max M3	-0.02	-8.74	0.01	-18.67	0.35	6.81	1-39	0
1	37	SC_CARRIL_REM	LinMoving	Max M3	-0.05	-13.18	0.02	-25.33	0.58	18.92	1-40	0
1	38	SC_CARRIL_REM	LinMoving	Max M3	-0.10	-21.28	0.03	-41.37	0.81	38.52	1-41	0
1	39	SC_CARRIL_REM	LinMoving	Max M3	-0.20	-30.71	0.04	-59.51	1.02	66.88	1-42	0
1	40	SC_CARRIL_REM	LinMoving	Max M3	-0.37	-41.67	0.04	-80.05	1.20	105.43	1-43	0
1	41	SC_CARRIL_REM	LinMoving	Max M3	-0.71	-54.33	0.05	-103.23	1.33	155.80	1-44	0
1	42	SC_CARRIL_REM	LinMoving	Max M3	-0.97	-55.59	0.05	-102.22	1.20	215.26	1-45	0
1	43	SC_CARRIL_REM	LinMoving	Max M3	-0.97	-50.59	0.05	-87.27	1.15	270.85	1-46	0
1	44	SC_CARRIL_REM	LinMoving	Max M3	-0.97	-45.59	0.05	-72.29	1.10	321.44	1-47	0
1	45	SC_CARRIL_REM	LinMoving	Max M3	-0.97	-40.59	0.05	-57.29	1.05	367.03	1-48	0
1	46	SC_CARRIL_REM	LinMoving	Max M3	-0.97	-35.59	0.05	-42.30	1.00	407.62	1-49	0
1	47	SC_CARRIL_REM	LinMoving	Max M3	-0.97	-30.59	0.05	-27.30	0.95	443.21	1-50	0
1	48	SC_CARRIL_REM	LinMoving	Max M3	-0.97	-25.59	0.05	-12.30	0.90	473.80	1-51	0
1	49	SC_CARRIL_REM	LinMoving	Max M3	-0.97	-20.59	0.05	2.70	0.85	499.40	1-52	0
1	50	SC_CARRIL_REM	LinMoving	Max M3	-0.97	-15.59	0.05	17.70	0.80	519.99	1-53	0
1	51	SC_CARRIL_REM	LinMoving	Max M3	-0.97	-10.59	0.05	32.69	0.75	535.58	1-54	0
1	52	SC_CARRIL_REM	LinMoving	Max M3	-0.98	-5.59	0.05	47.69	0.70	546.17	1-55	0
1	53	SC_CARRIL_REM	LinMoving	Max M3	-0.98	-0.59	0.05	62.69	0.65	551.76	1-56	0
1	54	SC_CARRIL_REM	LinMoving	Max M3	-0.98	4.41	0.05	77.69	0.60	552.35	1-57	0
1	55	SC_CARRIL_REM	LinMoving	Max M3	-0.98	9.41	0.05	92.69	0.55	547.94	1-58	0
1	56	SC_CARRIL_REM	LinMoving	Max M3	-0.98	14.41	0.05	107.69	0.50	538.54	1-59	0
1	57	SC_CARRIL_REM	LinMoving	Max M3	-0.98	19.41	0.05	122.69	0.45	524.13	1-60	0
1	58	SC_CARRIL_REM	LinMoving	Max M3	-0.98	24.41	0.05	137.69	0.40	504.72	1-61	0
1	59	SC_CARRIL_REM	LinMoving	Max M3	-0.97	29.41	0.05	152.69	0.35	480.31	1-62	0
1	60	SC_CARRIL_REM	LinMoving	Max M3	-0.97	34.41	0.05	167.69	0.30	450.90	1-63	0
1	61	SC_CARRIL_REM	LinMoving	Max M3	-0.97	39.41	0.05	182.69	0.25	416.49	1-64	0
1	62	SC_CARRIL_REM	LinMoving	Max M3	-0.97	44.40	0.05	197.68	0.20	377.08	1-65	0
1	63	SC_CARRIL_REM	LinMoving	Max M3	-0.97	49.40	0.05	212.68	0.15	332.68	1-66	0
1	64	SC_CARRIL_REM	LinMoving	Max M3	-0.97	54.40	0.05	227.68	0.10	283.27	1-67	0
1	65	SC_CARRIL_REM	LinMoving	Max M3	-0.97	59.40	0.05	242.68	0.06	228.86	1-68	0
1	66	SC_CARRIL_REM	LinMoving	Max M3	-0.97	64.40	0.05	257.67	0.01	169.45	1-69	0
1	67	SC_CARRIL_REM	LinMoving	Max M3	-0.97	69.40	0.05	272.67	-0.04	105.08	1-70	0
1	67.5	SC_CARRIL_REM	LinMoving	Max M3	-0.97	69.40	0.05	272.67	-0.07	70.44	1-71	0
1	68.5	SC_CARRIL_REM	LinMoving	Max M3	0.00	0.00	0.00	0.00	0.00	0.00	1-72	0

ESTRUCTURA E1. ESFUERZOS EN TABLERO PARA TODOS LOS CASOS E HIPOTESIS DE CARGA

Frame	Station	OutputCase	CaseType	StepType	P	V2	V3	T	M2	M3	FrameElem	ElemStation
Text	m	Text	Text	Text	KN	KN	KN	KN-m	KN-m	KN-m	Text	m
1	0	SC_CARRIL_REM	LinMoving	Min M3	0.00	0.00	0.00	0.00	0.00	0.00	1-1	0
1	0.5	SC_CARRIL_REM	LinMoving	Min M3	-1.24	-67.16	-0.07	-304.18	-0.14	-2.31	1-2	0
1	1.5	SC_CARRIL_REM	LinMoving	Min M3	-0.24	10.57	-0.05	-36.20	0.01	-11.42	1-3	0
1	2	SC_CARRIL_REM	LinMoving	Min M3	-0.24	10.57	-0.05	-36.19	0.04	-16.71	1-4	0
1	3	SC_CARRIL_REM	LinMoving	Min M3	-0.24	10.57	-0.05	-36.18	0.08	-27.29	1-5	0
1	4	SC_CARRIL_REM	LinMoving	Min M3	-0.23	10.58	-0.05	-36.18	0.13	-37.86	1-6	0
1	5	SC_CARRIL_REM	LinMoving	Min M3	-0.23	10.58	-0.05	-36.17	0.18	-48.43	1-7	0
1	6	SC_CARRIL_REM	LinMoving	Min M3	-0.23	10.58	-0.05	-36.17	0.22	-59.01	1-8	0
1	7	SC_CARRIL_REM	LinMoving	Min M3	-0.23	10.58	-0.05	-36.17	0.27	-69.58	1-9	0
1	8	SC_CARRIL_REM	LinMoving	Min M3	-0.23	10.58	-0.05	-36.17	0.32	-80.16	1-10	0
1	9	SC_CARRIL_REM	LinMoving	Min M3	-0.23	10.58	-0.05	-36.17	0.37	-90.73	1-11	0
1	10	SC_CARRIL_REM	LinMoving	Min M3	-0.23	10.58	-0.05	-36.17	0.41	-101.31	1-12	0
1	11	SC_CARRIL_REM	LinMoving	Min M3	-0.23	10.58	-0.05	-36.17	0.46	-111.88	1-13	0
1	12	SC_CARRIL_REM	LinMoving	Min M3	-0.23	10.58	-0.05	-36.17	0.51	-122.46	1-14	0
1	13	SC_CARRIL_REM	LinMoving	Min M3	-0.23	10.58	-0.05	-36.17	0.55	-133.03	1-15	0
1	14	SC_CARRIL_REM	LinMoving	Min M3	-0.23	10.58	-0.05	-36.17	0.60	-143.61	1-16	0
1	15	SC_CARRIL_REM	LinMoving	Min M3	-0.23	10.58	-0.05	-36.17	0.65	-154.18	1-17	0
1	16	SC_CARRIL_REM	LinMoving	Min M3	-0.23	10.58	-0.05	-36.17	0.69	-164.76	1-18	0
1	17	SC_CARRIL_REM	LinMoving	Min M3	-0.23	10.58	-0.05	-36.17	0.74	-175.33	1-19	0
1	18	SC_CARRIL_REM	LinMoving	Min M3	-0.23	10.58	-0.05	-36.17	0.79	-185.91	1-20	0
1	19	SC_CARRIL_REM	LinMoving	Min M3	-0.23	10.58	-0.05	-36.16	0.83	-196.48	1-21	0
1	20	SC_CARRIL_REM	LinMoving	Min M3	-0.23	10.58	-0.05	-36.16	0.88	-207.05	1-22	0
1	21	SC_CARRIL_REM	LinMoving	Min M3	-0.23	10.58	-0.05	-36.16	0.93	-217.63	1-23	0
1	22	SC_CARRIL_REM	LinMoving	Min M3	-0.23	10.58	-0.05	-36.16	0.97	-228.20	1-24	0
1	23	SC_CARRIL_REM	LinMoving	Min M3	-0.23	10.58	-0.05	-36.16	1.02	-238.78	1-25	0
1	24	SC_CARRIL_REM	LinMoving	Min M3	-0.23	10.58	-0.05	-36.16	1.07	-249.35	1-26	0
1	25	SC_CARRIL_REM	LinMoving	Min M3	-0.23	10.58	-0.05	-36.15	1.11	-259.93	1-27	0
1	26	SC_CARRIL_REM	LinMoving	Min M3	-0.24	10.58	-0.05	-36.14	1.16	-270.50	1-28	0
1	27	SC_CARRIL_REM	LinMoving	Min M3	-0.24	10.58	-0.05	-36.08	1.20	-281.08	1-29	0
1	28	SC_CARRIL_REM	LinMoving	Min M3	-0.50	16.83	-0.05	-22.09	1.18	-292.79	1-30	0
1	29	SC_CARRIL_REM	LinMoving	Min M3	-0.83	34.49	-0.05	16.08	1.40	-318.59	1-31	0
1	30	SC_CARRIL_REM	LinMoving	Min M3	-1.01	50.46	-0.06	51.63	1.68	-361.20	1-32	0
1	31	SC_CARRIL_REM	LinMoving	Min M3	-1.10	64.89	-0.07	84.77	1.99	-419.01	1-33	0
1	32	SC_CARRIL_REM	LinMoving	Min M3	-1.16	77.99	-0.08	115.80	2.31	-490.57	1-34	0
1	33	SC_CARRIL_REM	LinMoving	Min M3	-1.18	89.93	-0.09	144.96	2.64	-574.58	1-35	0
1	33.75	SC_CARRIL_REM	LinMoving	Min M3	-1.19	98.17	-0.09	165.63	2.89	-645.14	1-36	0
1	34.5	SC_CARRIL_REM	LinMoving	Min M3	-1.20	-106.19	0.10	-186.00	3.15	-722.30	1-37	0
1	35.25	SC_CARRIL_REM	LinMoving	Min M3	-1.19	-98.17	0.09	-165.63	2.89	-645.14	1-38	0
1	36	SC_CARRIL_REM	LinMoving	Min M3	-1.18	-89.93	0.09	-144.96	2.64	-574.63	1-39	0
1	37	SC_CARRIL_REM	LinMoving	Min M3	-1.16	-77.99	0.08	-115.80	2.31	-490.57	1-40	0
1	38	SC_CARRIL_REM	LinMoving	Min M3	-1.10	-64.89	0.07	-84.77	1.99	-419.01	1-41	0
1	39	SC_CARRIL_REM	LinMoving	Min M3	-1.01	-50.46	0.06	-51.63	1.68	-361.20	1-42	0
1	40	SC_CARRIL_REM	LinMoving	Min M3	-0.83	-34.49	0.05	-16.08	1.40	-318.59	1-43	0
1	41	SC_CARRIL_REM	LinMoving	Min M3	-0.50	-16.83	0.05	22.09	1.18	-292.79	1-44	0
1	42	SC_CARRIL_REM	LinMoving	Min M3	-0.24	-10.58	0.05	36.08	1.20	-281.08	1-45	0
1	43	SC_CARRIL_REM	LinMoving	Min M3	-0.24	-10.58	0.05	36.14	1.16	-270.50	1-46	0
1	44	SC_CARRIL_REM	LinMoving	Min M3	-0.23	-10.58	0.05	36.15	1.11	-259.93	1-47	0
1	45	SC_CARRIL_REM	LinMoving	Min M3	-0.23	-10.58	0.05	36.16	1.07	-249.35	1-48	0
1	46	SC_CARRIL_REM	LinMoving	Min M3	-0.23	-10.58	0.05	36.16	1.02	-238.78	1-49	0
1	47	SC_CARRIL_REM	LinMoving	Min M3	-0.23	-10.58	0.05	36.16	0.97	-228.20	1-50	0
1	48	SC_CARRIL_REM	LinMoving	Min M3	-0.23	-10.58	0.05	36.16	0.93	-217.63	1-51	0
1	49	SC_CARRIL_REM	LinMoving	Min M3	-0.23	-10.58	0.05	36.16	0.88	-207.05	1-52	0
1	50	SC_CARRIL_REM	LinMoving	Min M3	-0.23	-10.58	0.05	36.17	0.83	-196.48	1-53	0
1	51	SC_CARRIL_REM	LinMoving	Min M3	-0.23	-10.58	0.05	36.17	0.79	-185.91	1-54	0
1	52	SC_CARRIL_REM	LinMoving	Min M3	-0.23	-10.58	0.05	36.17	0.74	-175.33	1-55	0
1	53	SC_CARRIL_REM	LinMoving	Min M3	-0.23	-10.58	0.05	36.17	0.69	-164.76	1-56	0
1	54	SC_CARRIL_REM	LinMoving	Min M3	-0.23	-10.58	0.05	36.17	0.65	-154.18	1-57	0
1	55	SC_CARRIL_REM	LinMoving	Min M3	-0.23	-10.58	0.05	36.17	0.60	-143.61	1-58	0
1	56	SC_CARRIL_REM	LinMoving	Min M3	-0.23	-10.58	0.05	36.17	0.55	-133.03	1-59	0
1	57	SC_CARRIL_REM	LinMoving	Min M3	-0.23	-10.58	0.05	36.17	0.51	-122.46	1-60	0
1	58	SC_CARRIL_REM	LinMoving	Min M3	-0.23	-10.58	0.05	36.17	0.46	-111.88	1-61	0
1	59	SC_CARRIL_REM	LinMoving	Min M3	-0.23	-10.58	0.05	36.17	0.41	-101.31	1-62	0
1	60	SC_CARRIL_REM	LinMoving	Min M3	-0.23	-10.58	0.05	36.17	0.37	-90.73	1-63	0
1	61	SC_CARRIL_REM	LinMoving	Min M3	-0.23	-10.58	0.05	36.17	0.32	-80.16	1-64	0
1	62	SC_CARRIL_REM	LinMoving	Min M3	-0.23	-10.58	0.05	36.17	0.27	-69.58	1-65	0
1	63	SC_CARRIL_REM	LinMoving	Min M3	-0.23	-10.58	0.05	36.17	0.23	-59.01	1-66	0
1	64	SC_CARRIL_REM	LinMoving	Min M3	-0.23	-10.58	0.05	36.17	0.18	-48.43	1-67	0
1	65	SC_CARRIL_REM	LinMoving	Min M3	-0.23	-10.58	0.05	36.18	0.13	-37.86	1-68	0
1	66	SC_CARRIL_REM	LinMoving	Min M3	-0.24	-10.57	0.05	36.18	0.08	-27.29	1-69	0
1	67	SC_CARRIL_REM	LinMoving	Min M3	-0.24	-10.57	0.05	36.19	0.04	-16.70	1-70	0
1	67.5	SC_CARRIL_REM	LinMoving	Min M3	-0.24	-10.57	0.05	36.20	0.01	-11.40	1-71	0
1	68.5	SC_CARRIL_REM	LinMoving	Min M3	0.00	-2.50	0.00	-7.50	0.00	-1.25	1-72	0
1	0	RETRYFLU	LinStatic		0.00	0.00	0.00	0.00	0.00	0.00	1-1	0
1	0.5	RETRYFLU	LinStatic		285.92	12.74	0.00	0.00	0.00	246.41	1-2	0
1	1.5	RETRYFLU	LinStatic		285.92	12.74	0.00	0.00	0.00	253.46	1-3	0
1	2	RETRYFLU	LinStatic		285.92	12.74	0.00	0.00	0.00	257.89	1-4	0
1	3	RETRYFLU	LinStatic		285.92	12.74	0.00	0.00	0.00	245.15	1-5	0
1	4	RETRYFLU	LinStatic		285.92	12.74	0.00	0.00	0.00	232.41	1-6	0
1	5	RETRYFLU	LinStatic		285.92	12.74	0.00	0.00	0.00	219.67	1-7	0
1	6	RETRYFLU	LinStatic		285.92	12.74	0.00	0.00	0.00	206.93	1-8	0
1	7	RETRYFLU	LinStatic		285.92	12.74	0.00	0.00	0.00	194.18	1-9	0

ESTRUCTURA E1. ESFUERZOS EN TABLERO PARA TODOS LOS CASOS E HIPOTESIS DE CARGA

Frame	Station	OutputCase	CaseType	StepType	P	V2	V3	T	M2	M3	FrameElem	ElemStation
Text	m	Text	Text	Text	KN	KN	KN	KN-m	KN-m	KN-m	Text	m
1	8	RETRYFLU	LinStatic		285.92	12.74	0.00	0.00	0.00	181.44	1-10	0
1	9	RETRYFLU	LinStatic		285.92	12.74	0.00	0.00	0.00	168.70	1-11	0
1	10	RETRYFLU	LinStatic		285.92	12.74	0.00	0.00	0.00	155.96	1-12	0
1	11	RETRYFLU	LinStatic		285.92	12.74	0.00	0.00	0.00	143.22	1-13	0
1	12	RETRYFLU	LinStatic		285.92	12.74	0.00	0.00	0.00	130.48	1-14	0
1	13	RETRYFLU	LinStatic		285.92	12.74	0.00	0.00	0.00	117.74	1-15	0
1	14	RETRYFLU	LinStatic		285.92	12.74	0.00	0.00	0.00	105.00	1-16	0
1	15	RETRYFLU	LinStatic		285.92	12.74	0.00	0.00	0.00	92.26	1-17	0
1	16	RETRYFLU	LinStatic		285.92	12.74	0.00	0.00	0.00	79.52	1-18	0
1	17	RETRYFLU	LinStatic		285.92	12.74	0.00	0.00	0.00	66.78	1-19	0
1	18	RETRYFLU	LinStatic		285.92	12.74	0.00	0.00	0.00	54.04	1-20	0
1	19	RETRYFLU	LinStatic		285.92	12.74	0.00	0.00	0.00	41.30	1-21	0
1	20	RETRYFLU	LinStatic		285.92	12.74	0.00	0.00	0.00	28.56	1-22	0
1	21	RETRYFLU	LinStatic		285.92	12.74	0.00	0.00	0.00	15.82	1-23	0
1	22	RETRYFLU	LinStatic		285.92	12.74	0.00	0.00	0.00	3.08	1-24	0
1	23	RETRYFLU	LinStatic		285.92	12.74	0.00	0.00	0.00	-9.67	1-25	0
1	24	RETRYFLU	LinStatic		285.92	12.74	0.00	0.00	0.00	-22.41	1-26	0
1	25	RETRYFLU	LinStatic		285.92	12.74	0.00	0.00	0.00	-35.15	1-27	0
1	26	RETRYFLU	LinStatic		285.92	12.74	0.00	0.00	0.00	-47.89	1-28	0
1	27	RETRYFLU	LinStatic		285.92	12.74	0.00	0.00	0.00	-60.63	1-29	0
1	28	RETRYFLU	LinStatic		285.92	12.74	0.00	0.00	0.00	-73.37	1-30	0
1	29	RETRYFLU	LinStatic		285.92	12.74	0.00	0.00	0.00	-86.11	1-31	0
1	30	RETRYFLU	LinStatic		285.92	12.74	0.00	0.00	0.00	-98.85	1-32	0
1	31	RETRYFLU	LinStatic		285.92	12.74	0.00	0.00	0.00	-111.59	1-33	0
1	32	RETRYFLU	LinStatic		285.92	12.74	0.00	0.00	0.00	-124.33	1-34	0
1	33	RETRYFLU	LinStatic		285.92	12.74	0.00	0.00	0.00	-147.87	1-35	0
1	33.75	RETRYFLU	LinStatic		285.92	12.74	0.00	0.00	0.00	-157.43	1-36	0
1	34.5	RETRYFLU	LinStatic		285.92	-12.74	0.00	0.00	0.00	-166.98	1-37	0
1	35.25	RETRYFLU	LinStatic		285.92	-12.74	0.00	0.00	0.00	-157.43	1-38	0
1	36	RETRYFLU	LinStatic		285.92	-12.74	0.00	0.00	0.00	-137.07	1-39	0
1	37	RETRYFLU	LinStatic		285.92	-12.74	0.00	0.00	0.00	-124.33	1-40	0
1	38	RETRYFLU	LinStatic		285.92	-12.74	0.00	0.00	0.00	-111.59	1-41	0
1	39	RETRYFLU	LinStatic		285.92	-12.74	0.00	0.00	0.00	-98.85	1-42	0
1	40	RETRYFLU	LinStatic		285.92	-12.74	0.00	0.00	0.00	-86.11	1-43	0
1	41	RETRYFLU	LinStatic		285.92	-12.74	0.00	0.00	0.00	-73.37	1-44	0
1	42	RETRYFLU	LinStatic		285.92	-12.74	0.00	0.00	0.00	-60.63	1-45	0
1	43	RETRYFLU	LinStatic		285.92	-12.74	0.00	0.00	0.00	-47.89	1-46	0
1	44	RETRYFLU	LinStatic		285.92	-12.74	0.00	0.00	0.00	-35.15	1-47	0
1	45	RETRYFLU	LinStatic		285.92	-12.74	0.00	0.00	0.00	-22.41	1-48	0
1	46	RETRYFLU	LinStatic		285.92	-12.74	0.00	0.00	0.00	-9.67	1-49	0
1	47	RETRYFLU	LinStatic		285.92	-12.74	0.00	0.00	0.00	3.08	1-50	0
1	48	RETRYFLU	LinStatic		285.92	-12.74	0.00	0.00	0.00	15.82	1-51	0
1	49	RETRYFLU	LinStatic		285.92	-12.74	0.00	0.00	0.00	28.56	1-52	0
1	50	RETRYFLU	LinStatic		285.92	-12.74	0.00	0.00	0.00	41.30	1-53	0
1	51	RETRYFLU	LinStatic		285.92	-12.74	0.00	0.00	0.00	54.04	1-54	0
1	52	RETRYFLU	LinStatic		285.92	-12.74	0.00	0.00	0.00	66.78	1-55	0
1	53	RETRYFLU	LinStatic		285.92	-12.74	0.00	0.00	0.00	79.52	1-56	0
1	54	RETRYFLU	LinStatic		285.92	-12.74	0.00	0.00	0.00	92.26	1-57	0
1	55	RETRYFLU	LinStatic		285.92	-12.74	0.00	0.00	0.00	105.00	1-58	0
1	56	RETRYFLU	LinStatic		285.92	-12.74	0.00	0.00	0.00	117.74	1-59	0
1	57	RETRYFLU	LinStatic		285.92	-12.74	0.00	0.00	0.00	130.48	1-60	0
1	58	RETRYFLU	LinStatic		285.92	-12.74	0.00	0.00	0.00	143.22	1-61	0
1	59	RETRYFLU	LinStatic		285.92	-12.74	0.00	0.00	0.00	155.96	1-62	0
1	60	RETRYFLU	LinStatic		285.92	-12.74	0.00	0.00	0.00	168.70	1-63	0
1	61	RETRYFLU	LinStatic		285.92	-12.74	0.00	0.00	0.00	181.44	1-64	0
1	62	RETRYFLU	LinStatic		285.92	-12.74	0.00	0.00	0.00	194.18	1-65	0
1	63	RETRYFLU	LinStatic		285.92	-12.74	0.00	0.00	0.00	206.93	1-66	0
1	64	RETRYFLU	LinStatic		285.92	-12.74	0.00	0.00	0.00	219.67	1-67	0
1	65	RETRYFLU	LinStatic		285.92	-12.74	0.00	0.00	0.00	232.41	1-68	0
1	66	RETRYFLU	LinStatic		285.92	-12.74	0.00	0.00	0.00	245.15	1-69	0
1	67	RETRYFLU	LinStatic		285.92	-12.74	0.00	0.00	0.00	247.09	1-70	0
1	67.5	RETRYFLU	LinStatic		285.92	-12.74	0.00	0.00	0.00	233.67	1-71	0
1	68.5	RETRYFLU	LinStatic		0.00	0.00	0.00	0.00	0.00	0.00	1-72	0
1	0	E_TIERRAS	LinStatic		0.00	0.00	0.00	0.00	0.00	0.00	1-1	0
1	0.5	E_TIERRAS	LinStatic		-75.64	-2.79	0.00	0.00	0.00	-65.19	1-2	0
1	1.5	E_TIERRAS	LinStatic		-75.64	-2.79	0.00	0.00	0.00	-67.54	1-3	0
1	2	E_TIERRAS	LinStatic		-75.64	-2.79	0.00	0.00	0.00	-69.10	1-4	0
1	3	E_TIERRAS	LinStatic		-75.64	-2.79	0.00	0.00	0.00	-66.31	1-5	0
1	4	E_TIERRAS	LinStatic		-75.64	-2.79	0.00	0.00	0.00	-63.52	1-6	0
1	5	E_TIERRAS	LinStatic		-75.64	-2.79	0.00	0.00	0.00	-60.73	1-7	0
1	6	E_TIERRAS	LinStatic		-75.64	-2.79	0.00	0.00	0.00	-57.94	1-8	0
1	7	E_TIERRAS	LinStatic		-75.64	-2.79	0.00	0.00	0.00	-55.15	1-9	0
1	8	E_TIERRAS	LinStatic		-75.64	-2.79	0.00	0.00	0.00	-52.37	1-10	0
1	9	E_TIERRAS	LinStatic		-75.64	-2.79	0.00	0.00	0.00	-49.58	1-11	0
1	10	E_TIERRAS	LinStatic		-75.64	-2.79	0.00	0.00	0.00	-46.79	1-12	0
1	11	E_TIERRAS	LinStatic		-75.64	-2.79	0.00	0.00	0.00	-44.00	1-13	0
1	12	E_TIERRAS	LinStatic		-75.64	-2.79	0.00	0.00	0.00	-41.21	1-14	0
1	13	E_TIERRAS	LinStatic		-75.64	-2.79	0.00	0.00	0.00	-38.42	1-15	0
1	14	E_TIERRAS	LinStatic		-75.64	-2.79	0.00	0.00	0.00	-35.63	1-16	0
1	15	E_TIERRAS	LinStatic		-75.64	-2.79	0.00	0.00	0.00	-32.84	1-17	0
1	16	E_TIERRAS	LinStatic		-75.64	-2.79	0.00	0.00	0.00	-30.05	1-18	0

ESTRUCTURA E1. ESFUERZOS EN TABLERO PARA TODOS LOS CASOS E HIPOTESIS DE CARGA

Frame	Station	OutputCase	CaseType	StepType	P	V2	V3	T	M2	M3	FrameElem	ElemStation
Text	m	Text	Text	Text	KN	KN	KN	KN-m	KN-m	KN-m	Text	m
1	17	E_TIERRAS	LinStatic		-75.64	-2.79	0.00	0.00	0.00	-27.26	1-19	0
1	18	E_TIERRAS	LinStatic		-75.64	-2.79	0.00	0.00	0.00	-24.47	1-20	0
1	19	E_TIERRAS	LinStatic		-75.64	-2.79	0.00	0.00	0.00	-21.59	1-21	0
1	20	E_TIERRAS	LinStatic		-75.64	-2.79	0.00	0.00	0.00	-18.90	1-22	0
1	21	E_TIERRAS	LinStatic		-75.64	-2.79	0.00	0.00	0.00	-16.11	1-23	0
1	22	E_TIERRAS	LinStatic		-75.64	-2.79	0.00	0.00	0.00	-13.32	1-24	0
1	23	E_TIERRAS	LinStatic		-75.64	-2.79	0.00	0.00	0.00	-10.53	1-25	0
1	24	E_TIERRAS	LinStatic		-75.64	-2.79	0.00	0.00	0.00	-7.74	1-26	0
1	25	E_TIERRAS	LinStatic		-75.64	-2.79	0.00	0.00	0.00	-4.95	1-27	0
1	26	E_TIERRAS	LinStatic		-75.64	-2.79	0.00	0.00	0.00	-2.16	1-28	0
1	27	E_TIERRAS	LinStatic		-75.64	-2.79	0.00	0.00	0.00	0.63	1-29	0
1	28	E_TIERRAS	LinStatic		-75.64	-2.79	0.00	0.00	0.00	3.42	1-30	0
1	29	E_TIERRAS	LinStatic		-75.64	-2.79	0.00	0.00	0.00	6.21	1-31	0
1	30	E_TIERRAS	LinStatic		-75.64	-2.79	0.00	0.00	0.00	8.99	1-32	0
1	31	E_TIERRAS	LinStatic		-75.64	-2.79	0.00	0.00	0.00	11.78	1-33	0
1	32	E_TIERRAS	LinStatic		-75.64	-2.79	0.00	0.00	0.00	14.57	1-34	0
1	33	E_TIERRAS	LinStatic		-75.64	-2.79	0.00	0.00	0.00	20.22	1-35	0
1	33.75	E_TIERRAS	LinStatic		-75.64	-2.79	0.00	0.00	0.00	22.31	1-36	0
1	34.5	E_TIERRAS	LinStatic		-75.64	2.79	0.00	0.00	0.00	24.40	1-37	0
1	35.25	E_TIERRAS	LinStatic		-75.64	2.79	0.00	0.00	0.00	22.31	1-38	0
1	36	E_TIERRAS	LinStatic		-75.64	2.79	0.00	0.00	0.00	17.36	1-39	0
1	37	E_TIERRAS	LinStatic		-75.64	2.79	0.00	0.00	0.00	14.57	1-40	0
1	38	E_TIERRAS	LinStatic		-75.64	2.79	0.00	0.00	0.00	11.78	1-41	0
1	39	E_TIERRAS	LinStatic		-75.64	2.79	0.00	0.00	0.00	8.99	1-42	0
1	40	E_TIERRAS	LinStatic		-75.64	2.79	0.00	0.00	0.00	6.21	1-43	0
1	41	E_TIERRAS	LinStatic		-75.64	2.79	0.00	0.00	0.00	3.42	1-44	0
1	42	E_TIERRAS	LinStatic		-75.64	2.79	0.00	0.00	0.00	0.63	1-45	0
1	43	E_TIERRAS	LinStatic		-75.64	2.79	0.00	0.00	0.00	-2.16	1-46	0
1	44	E_TIERRAS	LinStatic		-75.64	2.79	0.00	0.00	0.00	-4.95	1-47	0
1	45	E_TIERRAS	LinStatic		-75.64	2.79	0.00	0.00	0.00	-7.74	1-48	0
1	46	E_TIERRAS	LinStatic		-75.64	2.79	0.00	0.00	0.00	-10.53	1-49	0
1	47	E_TIERRAS	LinStatic		-75.64	2.79	0.00	0.00	0.00	-13.32	1-50	0
1	48	E_TIERRAS	LinStatic		-75.64	2.79	0.00	0.00	0.00	-16.11	1-51	0
1	49	E_TIERRAS	LinStatic		-75.64	2.79	0.00	0.00	0.00	-18.90	1-52	0
1	50	E_TIERRAS	LinStatic		-75.64	2.79	0.00	0.00	0.00	-21.59	1-53	0
1	51	E_TIERRAS	LinStatic		-75.64	2.79	0.00	0.00	0.00	-24.47	1-54	0
1	52	E_TIERRAS	LinStatic		-75.64	2.79	0.00	0.00	0.00	-27.26	1-55	0
1	53	E_TIERRAS	LinStatic		-75.64	2.79	0.00	0.00	0.00	-30.05	1-56	0
1	54	E_TIERRAS	LinStatic		-75.64	2.79	0.00	0.00	0.00	-32.84	1-57	0
1	55	E_TIERRAS	LinStatic		-75.64	2.79	0.00	0.00	0.00	-35.53	1-58	0
1	56	E_TIERRAS	LinStatic		-75.64	2.79	0.00	0.00	0.00	-38.42	1-59	0
1	57	E_TIERRAS	LinStatic		-75.64	2.79	0.00	0.00	0.00	-41.21	1-60	0
1	58	E_TIERRAS	LinStatic		-75.64	2.79	0.00	0.00	0.00	-44.00	1-61	0
1	59	E_TIERRAS	LinStatic		-75.64	2.79	0.00	0.00	0.00	-46.79	1-62	0
1	60	E_TIERRAS	LinStatic		-75.64	2.79	0.00	0.00	0.00	-49.58	1-63	0
1	61	E_TIERRAS	LinStatic		-75.64	2.79	0.00	0.00	0.00	-52.37	1-64	0
1	62	E_TIERRAS	LinStatic		-75.64	2.79	0.00	0.00	0.00	-55.15	1-65	0
1	63	E_TIERRAS	LinStatic		-75.64	2.79	0.00	0.00	0.00	-57.94	1-66	0
1	64	E_TIERRAS	LinStatic		-75.64	2.79	0.00	0.00	0.00	-60.73	1-67	0
1	65	E_TIERRAS	LinStatic		-75.64	2.79	0.00	0.00	0.00	-63.52	1-68	0
1	66	E_TIERRAS	LinStatic		-75.64	2.79	0.00	0.00	0.00	-66.31	1-69	0
1	67	E_TIERRAS	LinStatic		-75.64	2.79	0.00	0.00	0.00	-66.24	1-70	0
1	67.5	E_TIERRAS	LinStatic		-75.64	2.79	0.00	0.00	0.00	-62.40	1-71	0
1	68.5	E_TIERRAS	LinStatic		0.00	0.00	0.00	0.00	0.00	0.00	1-72	0
1	0	E_SC	LinStatic		0.00	0.00	0.00	0.00	0.00	0.00	1-1	0
1	0.5	E_SC	LinStatic		-27.52	-1.01	0.00	0.00	0.00	-23.72	1-2	0
1	1.5	E_SC	LinStatic		-27.52	-1.01	0.00	0.00	0.00	-24.52	1-3	0
1	2	E_SC	LinStatic		-27.52	-1.01	0.00	0.00	0.00	-25.15	1-4	0
1	3	E_SC	LinStatic		-27.52	-1.01	0.00	0.00	0.00	-24.14	1-5	0
1	4	E_SC	LinStatic		-27.52	-1.01	0.00	0.00	0.00	-23.14	1-6	0
1	5	E_SC	LinStatic		-27.52	-1.01	0.00	0.00	0.00	-22.13	1-7	0
1	6	E_SC	LinStatic		-27.52	-1.01	0.00	0.00	0.00	-21.12	1-8	0
1	7	E_SC	LinStatic		-27.52	-1.01	0.00	0.00	0.00	-20.11	1-9	0
1	8	E_SC	LinStatic		-27.52	-1.01	0.00	0.00	0.00	-19.11	1-10	0
1	9	E_SC	LinStatic		-27.52	-1.01	0.00	0.00	0.00	-18.10	1-11	0
1	10	E_SC	LinStatic		-27.52	-1.01	0.00	0.00	0.00	-17.09	1-12	0
1	11	E_SC	LinStatic		-27.52	-1.01	0.00	0.00	0.00	-16.08	1-13	0
1	12	E_SC	LinStatic		-27.52	-1.01	0.00	0.00	0.00	-15.07	1-14	0
1	13	E_SC	LinStatic		-27.52	-1.01	0.00	0.00	0.00	-14.07	1-15	0
1	14	E_SC	LinStatic		-27.52	-1.01	0.00	0.00	0.00	-13.06	1-16	0
1	15	E_SC	LinStatic		-27.52	-1.01	0.00	0.00	0.00	-12.05	1-17	0
1	16	E_SC	LinStatic		-27.52	-1.01	0.00	0.00	0.00	-11.04	1-18	0
1	17	E_SC	LinStatic		-27.52	-1.01	0.00	0.00	0.00	-10.04	1-19	0
1	18	E_SC	LinStatic		-27.52	-1.01	0.00	0.00	0.00	-9.03	1-20	0
1	19	E_SC	LinStatic		-27.52	-1.01	0.00	0.00	0.00	-8.02	1-21	0
1	20	E_SC	LinStatic		-27.52	-1.01	0.00	0.00	0.00	-7.01	1-22	0
1	21	E_SC	LinStatic		-27.52	-1.01	0.00	0.00	0.00	-6.01	1-23	0
1	22	E_SC	LinStatic		-27.52	-1.01	0.00	0.00	0.00	-5.00	1-24	0
1	23	E_SC	LinStatic		-27.52	-1.01	0.00	0.00	0.00	-3.99	1-25	0
1	24	E_SC	LinStatic		-27.52	-1.01	0.00	0.00	0.00	-2.98	1-26	0
1	25	E_SC	LinStatic		-27.52	-1.01	0.00	0.00	0.00	-1.98	1-27	0

ESTRUCTURA E1. ESFUERZOS EN TABLERO PARA TODOS LOS CASOS E HIPOTESIS DE CARGA

Frame	Station	OutputCase	CaseType	StepType	P	V2	V3	T	M2	M3	FrameElem	ElemStation
Text	m	Text	Text	Text	KN	KN	KN	KN-m	KN-m	KN-m	Text	m
1	26	E_SC	LinStatic		-27.52	-1.01	0.00	0.00	0.00	-0.97	1-28	0
1	27	E_SC	LinStatic		-27.52	-1.01	0.00	0.00	0.00	0.04	1-29	0
1	28	E_SC	LinStatic		-27.52	-1.01	0.00	0.00	0.00	1.05	1-30	0
1	29	E_SC	LinStatic		-27.52	-1.01	0.00	0.00	0.00	2.06	1-31	0
1	30	E_SC	LinStatic		-27.52	-1.01	0.00	0.00	0.00	3.06	1-32	0
1	31	E_SC	LinStatic		-27.52	-1.01	0.00	0.00	0.00	4.07	1-33	0
1	32	E_SC	LinStatic		-27.52	-1.01	0.00	0.00	0.00	5.08	1-34	0
1	33	E_SC	LinStatic		-27.52	-1.01	0.00	0.00	0.00	7.13	1-35	0
1	33.75	E_SC	LinStatic		-27.52	-1.01	0.00	0.00	0.00	7.88	1-36	0
1	34.5	E_SC	LinStatic		-27.52	1.01	0.00	0.00	0.00	8.64	1-37	0
1	35.25	E_SC	LinStatic		-27.52	1.01	0.00	0.00	0.00	7.88	1-38	0
1	36	E_SC	LinStatic		-27.52	1.01	0.00	0.00	0.00	6.09	1-39	0
1	37	E_SC	LinStatic		-27.52	1.01	0.00	0.00	0.00	5.08	1-40	0
1	38	E_SC	LinStatic		-27.52	1.01	0.00	0.00	0.00	4.07	1-41	0
1	39	E_SC	LinStatic		-27.52	1.01	0.00	0.00	0.00	3.06	1-42	0
1	40	E_SC	LinStatic		-27.52	1.01	0.00	0.00	0.00	2.06	1-43	0
1	41	E_SC	LinStatic		-27.52	1.01	0.00	0.00	0.00	1.05	1-44	0
1	42	E_SC	LinStatic		-27.52	1.01	0.00	0.00	0.00	0.04	1-45	0
1	43	E_SC	LinStatic		-27.52	1.01	0.00	0.00	0.00	-0.97	1-46	0
1	44	E_SC	LinStatic		-27.52	1.01	0.00	0.00	0.00	-1.97	1-47	0
1	45	E_SC	LinStatic		-27.52	1.01	0.00	0.00	0.00	-2.98	1-48	0
1	46	E_SC	LinStatic		-27.52	1.01	0.00	0.00	0.00	-3.99	1-49	0
1	47	E_SC	LinStatic		-27.52	1.01	0.00	0.00	0.00	-5.00	1-50	0
1	48	E_SC	LinStatic		-27.52	1.01	0.00	0.00	0.00	-6.01	1-51	0
1	49	E_SC	LinStatic		-27.52	1.01	0.00	0.00	0.00	-7.01	1-52	0
1	50	E_SC	LinStatic		-27.52	1.01	0.00	0.00	0.00	-8.02	1-53	0
1	51	E_SC	LinStatic		-27.52	1.01	0.00	0.00	0.00	-9.03	1-54	0
1	52	E_SC	LinStatic		-27.52	1.01	0.00	0.00	0.00	-10.04	1-55	0
1	53	E_SC	LinStatic		-27.52	1.01	0.00	0.00	0.00	-11.04	1-56	0
1	54	E_SC	LinStatic		-27.52	1.01	0.00	0.00	0.00	-12.05	1-57	0
1	55	E_SC	LinStatic		-27.52	1.01	0.00	0.00	0.00	-13.06	1-58	0
1	56	E_SC	LinStatic		-27.52	1.01	0.00	0.00	0.00	-14.07	1-59	0
1	57	E_SC	LinStatic		-27.52	1.01	0.00	0.00	0.00	-15.07	1-60	0
1	58	E_SC	LinStatic		-27.52	1.01	0.00	0.00	0.00	-16.08	1-61	0
1	59	E_SC	LinStatic		-27.52	1.01	0.00	0.00	0.00	-17.09	1-62	0
1	60	E_SC	LinStatic		-27.52	1.01	0.00	0.00	0.00	-18.10	1-63	0
1	61	E_SC	LinStatic		-27.52	1.01	0.00	0.00	0.00	-19.11	1-64	0
1	62	E_SC	LinStatic		-27.52	1.01	0.00	0.00	0.00	-20.11	1-65	0
1	63	E_SC	LinStatic		-27.52	1.01	0.00	0.00	0.00	-21.12	1-66	0
1	64	E_SC	LinStatic		-27.52	1.01	0.00	0.00	0.00	-22.13	1-67	0
1	65	E_SC	LinStatic		-27.52	1.01	0.00	0.00	0.00	-23.14	1-68	0
1	66	E_SC	LinStatic		-27.52	1.01	0.00	0.00	0.00	-24.14	1-69	0
1	67	E_SC	LinStatic		-27.52	1.01	0.00	0.00	0.00	-24.11	1-70	0
1	67.5	E_SC	LinStatic		-27.52	1.01	0.00	0.00	0.00	-22.71	1-71	0
1	68.5	E_SC	LinStatic		0.00	0.00	0.00	0.00	0.00	0.00	1-72	0
1	0	VIENTO	LinStatic		0.00	0.00	0.00	0.00	0.00	0.00	1-1	0
1	0.5	VIENTO	LinStatic		0.00	0.00	174.87	23.81	4.28	0.00	1-2	0
1	1.5	VIENTO	LinStatic		0.00	0.00	168.58	12.15	-167.44	0.00	1-3	0
1	2	VIENTO	LinStatic		0.00	0.00	165.43	5.90	-250.94	0.00	1-4	0
1	3	VIENTO	LinStatic		0.00	0.00	159.14	5.90	-413.23	0.00	1-5	0
1	4	VIENTO	LinStatic		0.00	0.00	152.85	5.90	-569.22	0.00	1-6	0
1	5	VIENTO	LinStatic		0.00	0.00	146.56	5.90	-718.93	0.00	1-7	0
1	6	VIENTO	LinStatic		0.00	0.00	140.27	5.90	-862.35	0.00	1-8	0
1	7	VIENTO	LinStatic		0.00	0.00	133.98	5.90	-999.47	0.00	1-9	0
1	8	VIENTO	LinStatic		0.00	0.00	127.69	5.90	-1130.31	0.00	1-10	0
1	9	VIENTO	LinStatic		0.00	0.00	121.40	5.90	-1254.86	0.00	1-11	0
1	10	VIENTO	LinStatic		0.00	0.00	115.11	5.90	-1373.11	0.00	1-12	0
1	11	VIENTO	LinStatic		0.00	0.00	108.82	5.90	-1485.08	0.00	1-13	0
1	12	VIENTO	LinStatic		0.00	0.00	102.53	5.90	-1590.76	0.00	1-14	0
1	13	VIENTO	LinStatic		0.00	0.00	96.24	5.90	-1690.14	0.00	1-15	0
1	14	VIENTO	LinStatic		0.00	0.00	89.95	5.90	-1783.24	0.00	1-16	0
1	15	VIENTO	LinStatic		0.00	0.00	83.66	5.90	-1870.05	0.00	1-17	0
1	16	VIENTO	LinStatic		0.00	0.00	77.37	5.90	-1950.56	0.00	1-18	0
1	17	VIENTO	LinStatic		0.00	0.00	71.08	5.90	-2024.79	0.00	1-19	0
1	18	VIENTO	LinStatic		0.00	0.00	64.79	5.90	-2092.73	0.00	1-20	0
1	19	VIENTO	LinStatic		0.00	0.00	58.50	5.90	-2154.37	0.00	1-21	0
1	20	VIENTO	LinStatic		0.00	0.00	52.21	5.90	-2209.73	0.00	1-22	0
1	21	VIENTO	LinStatic		0.00	0.00	45.92	5.90	-2258.80	0.00	1-23	0
1	22	VIENTO	LinStatic		0.00	0.00	39.63	5.90	-2301.57	0.00	1-24	0
1	23	VIENTO	LinStatic		0.00	0.00	33.34	5.90	-2338.06	0.00	1-25	0
1	24	VIENTO	LinStatic		0.00	0.00	27.05	5.90	-2368.26	0.00	1-26	0
1	25	VIENTO	LinStatic		0.00	0.00	20.76	5.90	-2392.16	0.00	1-27	0
1	26	VIENTO	LinStatic		0.00	0.00	14.47	5.90	-2409.78	0.00	1-28	0
1	27	VIENTO	LinStatic		0.00	0.00	8.18	5.90	-2421.11	0.00	1-29	0
1	28	VIENTO	LinStatic		0.00	0.00	1.89	5.90	-2426.14	0.00	1-30	0
1	29	VIENTO	LinStatic		0.00	0.00	-4.40	5.90	-2424.89	0.00	1-31	0
1	30	VIENTO	LinStatic		0.00	0.00	-10.69	5.90	-2417.34	0.00	1-32	0
1	31	VIENTO	LinStatic		0.00	0.00	-16.98	5.90	-2403.51	0.00	1-33	0
1	32	VIENTO	LinStatic		0.00	0.00	-23.27	5.90	-2383.39	0.00	1-34	0
1	33	VIENTO	LinStatic		0.00	0.00	-29.56	4.78	-2356.97	0.00	1-35	0
1	33.75	VIENTO	LinStatic		0.00	0.00	-34.28	4.78	-2333.04	0.00	1-36	0

ESTRUCTURA E1. ESFUERZOS EN TABLERO PARA TODOS LOS CASOS E HIPOTESIS DE CARGA

Frame	Station	OutputCase	CaseType	StepType	P	V2	V3	T	M2	M3	FrameElem	ElemStation
Text	m	Text	Text	Text	KN	KN	KN	KN-m	KN-m	KN-m	Text	m
1	34.5	VIENTO	LinStatic		0.00	0.00	38.99	-4.73	-2305.56	0.00	1-37	0
1	35.25	VIENTO	LinStatic		0.00	0.00	34.28	-4.73	-2333.04	0.00	1-38	0
1	36	VIENTO	LinStatic		0.00	0.00	29.56	-5.84	-2356.97	0.00	1-39	0
1	37	VIENTO	LinStatic		0.00	0.00	23.27	-5.84	-2383.39	0.00	1-40	0
1	38	VIENTO	LinStatic		0.00	0.00	16.98	-5.84	-2403.51	0.00	1-41	0
1	39	VIENTO	LinStatic		0.00	0.00	10.69	-5.84	-2417.34	0.00	1-42	0
1	40	VIENTO	LinStatic		0.00	0.00	4.40	-5.84	-2424.89	0.00	1-43	0
1	41	VIENTO	LinStatic		0.00	0.00	-1.89	-5.84	-2426.14	0.00	1-44	0
1	42	VIENTO	LinStatic		0.00	0.00	-8.18	-5.84	-2421.10	0.00	1-45	0
1	43	VIENTO	LinStatic		0.00	0.00	-14.47	-5.84	-2409.78	0.00	1-46	0
1	44	VIENTO	LinStatic		0.00	0.00	-20.76	-5.84	-2392.16	0.00	1-47	0
1	45	VIENTO	LinStatic		0.00	0.00	-27.05	-5.84	-2368.25	0.00	1-48	0
1	46	VIENTO	LinStatic		0.00	0.00	-33.34	-5.84	-2338.06	0.00	1-49	0
1	47	VIENTO	LinStatic		0.00	0.00	-39.63	-5.84	-2301.57	0.00	1-50	0
1	48	VIENTO	LinStatic		0.00	0.00	-45.92	-5.84	-2258.79	0.00	1-51	0
1	49	VIENTO	LinStatic		0.00	0.00	-52.21	-5.84	-2209.73	0.00	1-52	0
1	50	VIENTO	LinStatic		0.00	0.00	-58.50	-5.84	-2154.37	0.00	1-53	0
1	51	VIENTO	LinStatic		0.00	0.00	-64.79	-5.84	-2092.72	0.00	1-54	0
1	52	VIENTO	LinStatic		0.00	0.00	-71.08	-5.84	-2024.79	0.00	1-55	0
1	53	VIENTO	LinStatic		0.00	0.00	-77.37	-5.84	-1950.56	0.00	1-56	0
1	54	VIENTO	LinStatic		0.00	0.00	-83.66	-5.84	-1870.04	0.00	1-57	0
1	55	VIENTO	LinStatic		0.00	0.00	-89.95	-5.84	-1783.24	0.00	1-58	0
1	56	VIENTO	LinStatic		0.00	0.00	-96.24	-5.84	-1690.14	0.00	1-59	0
1	57	VIENTO	LinStatic		0.00	0.00	-102.53	-5.84	-1590.75	0.00	1-60	0
1	58	VIENTO	LinStatic		0.00	0.00	-108.82	-5.84	-1485.08	0.00	1-61	0
1	59	VIENTO	LinStatic		0.00	0.00	-115.11	-5.84	-1373.11	0.00	1-62	0
1	60	VIENTO	LinStatic		0.00	0.00	-121.40	-5.84	-1254.85	0.00	1-63	0
1	61	VIENTO	LinStatic		0.00	0.00	-127.69	-5.84	-1130.31	0.00	1-64	0
1	62	VIENTO	LinStatic		0.00	0.00	-133.98	-5.84	-999.47	0.00	1-65	0
1	63	VIENTO	LinStatic		0.00	0.00	-140.27	-5.84	-862.34	0.00	1-66	0
1	64	VIENTO	LinStatic		0.00	0.00	-146.56	-5.84	-718.93	0.00	1-67	0
1	65	VIENTO	LinStatic		0.00	0.00	-152.85	-5.84	-569.22	0.00	1-68	0
1	66	VIENTO	LinStatic		0.00	0.00	-159.14	-5.84	-413.22	0.00	1-69	0
1	67	VIENTO	LinStatic		0.00	0.00	-165.43	-12.09	-250.94	0.00	1-70	0
1	67.5	VIENTO	LinStatic		0.00	0.00	-168.58	-23.76	-167.44	0.00	1-71	0
1	68.5	VIENTO	LinStatic		0.00	0.00	3.15	0.00	0.79	0.00	1-72	0
1	0	PCARGA_HIP_1	LinStatic		0.00	0.00	0.00	0.00	0.00	0.00	1-1	0
1	0.5	PCARGA_HIP_1	LinStatic		-11.28	-787.98	0.00	0.00	0.00	-9.72	1-2	0
1	1.5	PCARGA_HIP_1	LinStatic		-11.28	-787.98	0.00	0.00	0.00	777.47	1-3	0
1	2	PCARGA_HIP_1	LinStatic		-11.28	-787.98	0.00	0.00	0.00	1171.03	1-4	0
1	3	PCARGA_HIP_1	LinStatic		-11.28	-787.98	0.00	0.00	0.00	1959.01	1-5	0
1	4	PCARGA_HIP_1	LinStatic		-11.28	-787.98	0.00	0.00	0.00	2746.98	1-6	0
1	5	PCARGA_HIP_1	LinStatic		-11.28	-650.68	0.00	0.00	0.00	3414.04	1-7	0
1	6	PCARGA_HIP_1	LinStatic		-11.28	-650.68	0.00	0.00	0.00	4064.73	1-8	0
1	7	PCARGA_HIP_1	LinStatic		-11.28	-650.68	0.00	0.00	0.00	4715.41	1-9	0
1	8	PCARGA_HIP_1	LinStatic		-11.28	-434.94	0.00	0.00	0.00	5283.59	1-10	0
1	9	PCARGA_HIP_1	LinStatic		-11.28	-434.94	0.00	0.00	0.00	5718.52	1-11	0
1	10	PCARGA_HIP_1	LinStatic		-11.28	-434.94	0.00	0.00	0.00	6153.46	1-12	0
1	11	PCARGA_HIP_1	LinStatic		-11.28	-238.80	0.00	0.00	0.00	6513.69	1-13	0
1	12	PCARGA_HIP_1	LinStatic		-11.28	-42.67	0.00	0.00	0.00	6748.26	1-14	0
1	13	PCARGA_HIP_1	LinStatic		-11.28	-42.67	0.00	0.00	0.00	6790.93	1-15	0
1	14	PCARGA_HIP_1	LinStatic		-11.28	-42.67	0.00	0.00	0.00	6833.60	1-16	0
1	15	PCARGA_HIP_1	LinStatic		-11.28	-42.67	0.00	0.00	0.00	6876.27	1-17	0
1	16	PCARGA_HIP_1	LinStatic		-11.28	153.46	0.00	0.00	0.00	6915.09	1-18	0
1	17	PCARGA_HIP_1	LinStatic		-11.28	153.46	0.00	0.00	0.00	6761.63	1-19	0
1	18	PCARGA_HIP_1	LinStatic		-11.28	349.60	0.00	0.00	0.00	6478.66	1-20	0
1	19	PCARGA_HIP_1	LinStatic		-11.28	349.60	0.00	0.00	0.00	6129.06	1-21	0
1	20	PCARGA_HIP_1	LinStatic		-11.28	349.60	0.00	0.00	0.00	5779.47	1-22	0
1	21	PCARGA_HIP_1	LinStatic		-11.28	565.34	0.00	0.00	0.00	5289.22	1-23	0
1	22	PCARGA_HIP_1	LinStatic		-11.28	565.34	0.00	0.00	0.00	4723.88	1-24	0
1	23	PCARGA_HIP_1	LinStatic		-11.28	565.34	0.00	0.00	0.00	4158.54	1-25	0
1	24	PCARGA_HIP_1	LinStatic		-11.28	702.64	0.00	0.00	0.00	3571.16	1-26	0
1	25	PCARGA_HIP_1	LinStatic		-11.28	702.64	0.00	0.00	0.00	2868.53	1-27	0
1	26	PCARGA_HIP_1	LinStatic		-11.28	702.64	0.00	0.00	0.00	2165.89	1-28	0
1	27	PCARGA_HIP_1	LinStatic		-11.28	702.64	0.00	0.00	0.00	1463.25	1-29	0
1	28	PCARGA_HIP_1	LinStatic		-11.28	702.64	0.00	0.00	0.00	760.62	1-30	0
1	29	PCARGA_HIP_1	LinStatic		-11.28	702.64	0.00	0.00	0.00	57.98	1-31	0
1	30	PCARGA_HIP_1	LinStatic		-11.28	702.64	0.00	0.00	0.00	-644.65	1-32	0
1	31	PCARGA_HIP_1	LinStatic		-11.28	702.64	0.00	0.00	0.00	-1341.29	1-33	0
1	32	PCARGA_HIP_1	LinStatic		-11.28	702.64	0.00	0.00	0.00	-2048.92	1-34	0
1	33	PCARGA_HIP_1	LinStatic		-11.28	702.64	0.00	0.00	0.00	-2751.13	1-35	0
1	33.75	PCARGA_HIP_1	LinStatic		-11.28	702.64	0.00	0.00	0.00	-3275.11	1-36	0
1	34.5	PCARGA_HIP_1	LinStatic		-3.08	-111.65	0.00	0.00	0.00	-3798.86	1-37	0
1	35.25	PCARGA_HIP_1	LinStatic		-3.08	-111.65	0.00	0.00	0.00	-3715.13	1-38	0
1	36	PCARGA_HIP_1	LinStatic		-3.08	-111.65	0.00	0.00	0.00	-3631.51	1-39	0
1	37	PCARGA_HIP_1	LinStatic		-3.08	-111.65	0.00	0.00	0.00	-3515.86	1-40	0
1	38	PCARGA_HIP_1	LinStatic		-3.08	-111.65	0.00	0.00	0.00	-3400.21	1-41	0
1	39	PCARGA_HIP_1	LinStatic		-3.08	-111.65	0.00	0.00	0.00	-3294.57	1-42	0
1	40	PCARGA_HIP_1	LinStatic		-3.08	-111.65	0.00	0.00	0.00	-3184.92	1-43	0
1	41	PCARGA_HIP_1	LinStatic		-3.08	-111.65	0.00	0.00	0.00	-3071.27	1-44	0
1	42	PCARGA_HIP_1	LinStatic		-3.08	-111.65	0.00	0.00	0.00	-2961.63	1-45	0

ESTRUCTURA E1. ESFUERZOS EN TABLERO PARA TODOS LOS CASOS E HIPOTESIS DE CARGA

Frame	Station	OutputCase	CaseType	StepType	P	V2	V3	T	M2	M3	FrameElem	ElemStation
Text	m	Text	Text	Text	KN	KN	KN	KN-m	KN-m	KN-m	Text	m
1	43	PCARGA_HIP_1	LinStatic		-3.08	-111.65	0.00	0.00	0.00	-2848.98	1-46	0
1	44	PCARGA_HIP_1	LinStatic		-3.08	-111.65	0.00	0.00	0.00	-2738.33	1-47	0
1	45	PCARGA_HIP_1	LinStatic		-3.08	-111.65	0.00	0.00	0.00	-2628.69	1-48	0
1	46	PCARGA_HIP_1	LinStatic		-3.08	-111.65	0.00	0.00	0.00	-2515.04	1-49	0
1	47	PCARGA_HIP_1	LinStatic		-3.08	-111.65	0.00	0.00	0.00	-2408.39	1-50	0
1	48	PCARGA_HIP_1	LinStatic		-3.08	-111.65	0.00	0.00	0.00	-2294.75	1-51	0
1	49	PCARGA_HIP_1	LinStatic		-3.08	-111.65	0.00	0.00	0.00	-2180.10	1-52	0
1	50	PCARGA_HIP_1	LinStatic		-3.08	-111.65	0.00	0.00	0.00	-2068.45	1-53	0
1	51	PCARGA_HIP_1	LinStatic		-3.08	-111.65	0.00	0.00	0.00	-1958.80	1-54	0
1	52	PCARGA_HIP_1	LinStatic		-3.08	-111.65	0.00	0.00	0.00	-1845.16	1-55	0
1	53	PCARGA_HIP_1	LinStatic		-3.08	-111.65	0.00	0.00	0.00	-1731.51	1-56	0
1	54	PCARGA_HIP_1	LinStatic		-3.08	-111.65	0.00	0.00	0.00	-1621.86	1-57	0
1	55	PCARGA_HIP_1	LinStatic		-3.08	-111.65	0.00	0.00	0.00	-1510.22	1-58	0
1	56	PCARGA_HIP_1	LinStatic		-3.08	-111.65	0.00	0.00	0.00	-1398.57	1-59	0
1	57	PCARGA_HIP_1	LinStatic		-3.08	-111.65	0.00	0.00	0.00	-1280.92	1-60	0
1	58	PCARGA_HIP_1	LinStatic		-3.08	-111.65	0.00	0.00	0.00	-1175.28	1-61	0
1	59	PCARGA_HIP_1	LinStatic		-3.08	-111.65	0.00	0.00	0.00	-1063.63	1-62	0
1	60	PCARGA_HIP_1	LinStatic		-3.08	-111.65	0.00	0.00	0.00	-951.98	1-63	0
1	61	PCARGA_HIP_1	LinStatic		-3.08	-111.65	0.00	0.00	0.00	-840.34	1-64	0
1	62	PCARGA_HIP_1	LinStatic		-3.08	-111.65	0.00	0.00	0.00	-728.69	1-65	0
1	63	PCARGA_HIP_1	LinStatic		-3.08	-111.65	0.00	0.00	0.00	-617.04	1-66	0
1	64	PCARGA_HIP_1	LinStatic		-3.08	-111.65	0.00	0.00	0.00	-505.40	1-67	0
1	65	PCARGA_HIP_1	LinStatic		-3.08	-111.65	0.00	0.00	0.00	-393.75	1-68	0
1	66	PCARGA_HIP_1	LinStatic		-3.08	-111.65	0.00	0.00	0.00	-282.10	1-69	0
1	67	PCARGA_HIP_1	LinStatic		-3.08	-111.65	0.00	0.00	0.00	-170.34	1-70	0
1	67.5	PCARGA_HIP_1	LinStatic		-3.08	-111.65	0.00	0.00	0.00	-114.30	1-71	0
1	68.5	PCARGA_HIP_1	LinStatic		0.00	0.00	0.00	0.00	0.00	0.00	1-72	0
1	0	PCARGA_HIP_2	LinStatic		0.00	0.00	0.00	0.00	0.00	0.00	1-1	0
1	0.5	PCARGA_HIP_2	LinStatic		-3.08	111.65	0.00	0.00	0.00	-2.66	1-2	0
1	1.5	PCARGA_HIP_2	LinStatic		-3.08	111.65	0.00	0.00	0.00	-114.52	1-3	0
1	2	PCARGA_HIP_2	LinStatic		-3.08	111.65	0.00	0.00	0.00	-170.46	1-4	0
1	3	PCARGA_HIP_2	LinStatic		-3.08	111.65	0.00	0.00	0.00	-282.12	1-5	0
1	4	PCARGA_HIP_2	LinStatic		-3.08	111.65	0.00	0.00	0.00	-393.77	1-6	0
1	5	PCARGA_HIP_2	LinStatic		-3.08	111.65	0.00	0.00	0.00	-505.42	1-7	0
1	6	PCARGA_HIP_2	LinStatic		-3.08	111.65	0.00	0.00	0.00	-617.08	1-8	0
1	7	PCARGA_HIP_2	LinStatic		-3.08	111.65	0.00	0.00	0.00	-728.73	1-9	0
1	8	PCARGA_HIP_2	LinStatic		-3.08	111.65	0.00	0.00	0.00	-840.38	1-10	0
1	9	PCARGA_HIP_2	LinStatic		-3.08	111.65	0.00	0.00	0.00	-952.03	1-11	0
1	10	PCARGA_HIP_2	LinStatic		-3.08	111.65	0.00	0.00	0.00	-1063.69	1-12	0
1	11	PCARGA_HIP_2	LinStatic		-3.08	111.65	0.00	0.00	0.00	-1175.34	1-13	0
1	12	PCARGA_HIP_2	LinStatic		-3.08	111.65	0.00	0.00	0.00	-1286.99	1-14	0
1	13	PCARGA_HIP_2	LinStatic		-3.08	111.65	0.00	0.00	0.00	-1398.65	1-15	0
1	14	PCARGA_HIP_2	LinStatic		-3.08	111.65	0.00	0.00	0.00	-1510.30	1-16	0
1	15	PCARGA_HIP_2	LinStatic		-3.08	111.65	0.00	0.00	0.00	-1621.95	1-17	0
1	16	PCARGA_HIP_2	LinStatic		-3.08	111.65	0.00	0.00	0.00	-1731.60	1-18	0
1	17	PCARGA_HIP_2	LinStatic		-3.08	111.65	0.00	0.00	0.00	-1845.26	1-19	0
1	18	PCARGA_HIP_2	LinStatic		-3.08	111.65	0.00	0.00	0.00	-1958.91	1-20	0
1	19	PCARGA_HIP_2	LinStatic		-3.08	111.65	0.00	0.00	0.00	-2068.56	1-21	0
1	20	PCARGA_HIP_2	LinStatic		-3.08	111.65	0.00	0.00	0.00	-2188.22	1-22	0
1	21	PCARGA_HIP_2	LinStatic		-3.08	111.65	0.00	0.00	0.00	-2291.87	1-23	0
1	22	PCARGA_HIP_2	LinStatic		-3.08	111.65	0.00	0.00	0.00	-2403.52	1-24	0
1	23	PCARGA_HIP_2	LinStatic		-3.08	111.65	0.00	0.00	0.00	-2515.17	1-25	0
1	24	PCARGA_HIP_2	LinStatic		-3.08	111.65	0.00	0.00	0.00	-2626.83	1-26	0
1	25	PCARGA_HIP_2	LinStatic		-3.08	111.65	0.00	0.00	0.00	-2738.48	1-27	0
1	26	PCARGA_HIP_2	LinStatic		-3.08	111.65	0.00	0.00	0.00	-2850.13	1-28	0
1	27	PCARGA_HIP_2	LinStatic		-3.08	111.65	0.00	0.00	0.00	-2961.78	1-29	0
1	28	PCARGA_HIP_2	LinStatic		-3.08	111.65	0.00	0.00	0.00	-3073.44	1-30	0
1	29	PCARGA_HIP_2	LinStatic		-3.08	111.65	0.00	0.00	0.00	-3185.09	1-31	0
1	30	PCARGA_HIP_2	LinStatic		-3.08	111.65	0.00	0.00	0.00	-3296.74	1-32	0
1	31	PCARGA_HIP_2	LinStatic		-3.08	111.65	0.00	0.00	0.00	-3408.40	1-33	0
1	32	PCARGA_HIP_2	LinStatic		-3.08	111.65	0.00	0.00	0.00	-3520.05	1-34	0
1	33	PCARGA_HIP_2	LinStatic		-3.08	111.65	0.00	0.00	0.00	-3631.58	1-35	0
1	33.75	PCARGA_HIP_2	LinStatic		-3.08	111.65	0.00	0.00	0.00	-3715.32	1-36	0
1	34.5	PCARGA_HIP_2	LinStatic		-11.28	-702.69	0.00	0.00	0.00	-3804.29	1-37	0
1	35.25	PCARGA_HIP_2	LinStatic		-11.28	-702.69	0.00	0.00	0.00	-3279.27	1-38	0
1	36	PCARGA_HIP_2	LinStatic		-11.28	-702.69	0.00	0.00	0.00	-2751.68	1-39	0
1	37	PCARGA_HIP_2	LinStatic		-11.28	-702.69	0.00	0.00	0.00	-2050.00	1-40	0
1	38	PCARGA_HIP_2	LinStatic		-11.28	-702.69	0.00	0.00	0.00	-1347.31	1-41	0
1	39	PCARGA_HIP_2	LinStatic		-11.28	-702.69	0.00	0.00	0.00	-644.62	1-42	0
1	40	PCARGA_HIP_2	LinStatic		-11.28	-702.69	0.00	0.00	0.00	58.07	1-43	0
1	41	PCARGA_HIP_2	LinStatic		-11.28	-702.69	0.00	0.00	0.00	760.75	1-44	0
1	42	PCARGA_HIP_2	LinStatic		-11.28	-702.69	0.00	0.00	0.00	1463.44	1-45	0
1	43	PCARGA_HIP_2	LinStatic		-11.28	-702.69	0.00	0.00	0.00	2166.13	1-46	0
1	44	PCARGA_HIP_2	LinStatic		-11.28	-702.69	0.00	0.00	0.00	2868.82	1-47	0
1	45	PCARGA_HIP_2	LinStatic		-11.28	-702.69	0.00	0.00	0.00	3571.50	1-48	0
1	46	PCARGA_HIP_2	LinStatic		-11.28	-565.39	0.00	0.00	0.00	4158.86	1-49	0
1	47	PCARGA_HIP_2	LinStatic		-11.28	-565.39	0.00	0.00	0.00	4724.26	1-50	0
1	48	PCARGA_HIP_2	LinStatic		-11.28	-565.39	0.00	0.00	0.00	5289.65	1-51	0
1	49	PCARGA_HIP_2	LinStatic		-11.28	-349.65	0.00	0.00	0.00	5779.54	1-52	0
1	50	PCARGA_HIP_2	LinStatic		-11.28	-349.65	0.00	0.00	0.00	6129.18	1-53	0
1	51	PCARGA_HIP_2	LinStatic		-11.28	-349.65	0.00	0.00	0.00	6478.83	1-54	0

ESTRUCTURA E1. ESFUERZOS EN TABLERO PARA TODOS LOS CASOS E HIPOTESIS DE CARGA

Frame	Station	OutputCase	CaseType	StepType	P	V2	V3	T	M2	M3	FrameElem	ElemStation
Text	m	Text	Text	Text	KN	KN	KN	KN-m	KN-m	KN-m	Text	m
1	52	PCARGA_HIP_2	LinStatic		-11.28	-153.52	0.00	0.00	0.00	6761.80	1-55	0
1	53	PCARGA_HIP_2	LinStatic		-11.28	-153.52	0.00	0.00	0.00	6915.31	1-56	0
1	54	PCARGA_HIP_2	LinStatic		-11.28	42.62	0.00	0.00	0.00	6876.62	1-57	0
1	55	PCARGA_HIP_2	LinStatic		-11.28	42.62	0.00	0.00	0.00	6834.00	1-58	0
1	56	PCARGA_HIP_2	LinStatic		-11.28	42.62	0.00	0.00	0.00	6791.38	1-59	0
1	57	PCARGA_HIP_2	LinStatic		-11.28	42.62	0.00	0.00	0.00	6748.76	1-60	0
1	58	PCARGA_HIP_2	LinStatic		-11.28	238.75	0.00	0.00	0.00	6513.93	1-61	0
1	59	PCARGA_HIP_2	LinStatic		-11.28	434.88	0.00	0.00	0.00	6153.58	1-62	0
1	60	PCARGA_HIP_2	LinStatic		-11.28	434.88	0.00	0.00	0.00	5718.70	1-63	0
1	61	PCARGA_HIP_2	LinStatic		-11.28	434.88	0.00	0.00	0.00	5283.81	1-64	0
1	62	PCARGA_HIP_2	LinStatic		-11.28	650.63	0.00	0.00	0.00	4715.17	1-65	0
1	63	PCARGA_HIP_2	LinStatic		-11.28	650.63	0.00	0.00	0.00	4064.54	1-66	0
1	64	PCARGA_HIP_2	LinStatic		-11.28	650.63	0.00	0.00	0.00	3413.91	1-67	0
1	65	PCARGA_HIP_2	LinStatic		-11.28	787.92	0.00	0.00	0.00	2746.80	1-68	0
1	66	PCARGA_HIP_2	LinStatic		-11.28	787.92	0.00	0.00	0.00	1958.88	1-69	0
1	67	PCARGA_HIP_2	LinStatic		-11.28	787.92	0.00	0.00	0.00	1171.38	1-70	0
1	67.5	PCARGA_HIP_2	LinStatic		-11.28	787.92	0.00	0.00	0.00	778.20	1-71	0
1	68.5	PCARGA_HIP_2	LinStatic		0.00	0.00	0.00	0.00	0.00	0.00	1-72	0
1	0	PCARGA_HIP_3	LinStatic		0.00	0.00	0.00	0.00	0.00	0.00	1-1	0
1	0.5	PCARGA_HIP_3	LinStatic		-7.72	-309.04	0.00	0.00	0.00	-6.66	1-2	0
1	1.5	PCARGA_HIP_3	LinStatic		-7.72	-309.04	0.00	0.00	0.00	301.85	1-3	0
1	2	PCARGA_HIP_3	LinStatic		-7.72	-309.04	0.00	0.00	0.00	456.08	1-4	0
1	3	PCARGA_HIP_3	LinStatic		-7.72	-309.04	0.00	0.00	0.00	765.12	1-5	0
1	4	PCARGA_HIP_3	LinStatic		-7.72	-309.04	0.00	0.00	0.00	1074.17	1-6	0
1	5	PCARGA_HIP_3	LinStatic		-7.72	-309.04	0.00	0.00	0.00	1383.21	1-7	0
1	6	PCARGA_HIP_3	LinStatic		-7.72	-309.04	0.00	0.00	0.00	1692.25	1-8	0
1	7	PCARGA_HIP_3	LinStatic		-7.72	-309.04	0.00	0.00	0.00	2001.29	1-9	0
1	8	PCARGA_HIP_3	LinStatic		-7.72	-309.04	0.00	0.00	0.00	2310.34	1-10	0
1	9	PCARGA_HIP_3	LinStatic		-7.72	-309.04	0.00	0.00	0.00	2619.38	1-11	0
1	10	PCARGA_HIP_3	LinStatic		-7.72	-309.04	0.00	0.00	0.00	2928.42	1-12	0
1	11	PCARGA_HIP_3	LinStatic		-7.72	-309.04	0.00	0.00	0.00	3237.46	1-13	0
1	12	PCARGA_HIP_3	LinStatic		-7.72	-112.91	0.00	0.00	0.00	3471.98	1-14	0
1	13	PCARGA_HIP_3	LinStatic		-7.72	83.22	0.00	0.00	0.00	3580.96	1-15	0
1	14	PCARGA_HIP_3	LinStatic		-7.72	83.22	0.00	0.00	0.00	3497.74	1-16	0
1	15	PCARGA_HIP_3	LinStatic		-7.72	83.22	0.00	0.00	0.00	3414.52	1-17	0
1	16	PCARGA_HIP_3	LinStatic		-7.72	298.97	0.00	0.00	0.00	3326.98	1-18	0
1	17	PCARGA_HIP_3	LinStatic		-7.72	298.97	0.00	0.00	0.00	3028.01	1-19	0
1	18	PCARGA_HIP_3	LinStatic		-7.72	298.97	0.00	0.00	0.00	2729.04	1-20	0
1	19	PCARGA_HIP_3	LinStatic		-7.72	298.97	0.00	0.00	0.00	2430.07	1-21	0
1	20	PCARGA_HIP_3	LinStatic		-7.72	436.26	0.00	0.00	0.00	2059.71	1-22	0
1	21	PCARGA_HIP_3	LinStatic		-7.72	436.26	0.00	0.00	0.00	1623.44	1-23	0
1	22	PCARGA_HIP_3	LinStatic		-7.72	436.26	0.00	0.00	0.00	1187.18	1-24	0
1	23	PCARGA_HIP_3	LinStatic		-7.72	436.26	0.00	0.00	0.00	750.92	1-25	0
1	24	PCARGA_HIP_3	LinStatic		-7.72	436.26	0.00	0.00	0.00	314.65	1-26	0
1	25	PCARGA_HIP_3	LinStatic		-7.72	436.26	0.00	0.00	0.00	-121.61	1-27	0
1	26	PCARGA_HIP_3	LinStatic		-7.72	436.26	0.00	0.00	0.00	-557.87	1-28	0
1	27	PCARGA_HIP_3	LinStatic		-7.72	436.26	0.00	0.00	0.00	-994.13	1-29	0
1	28	PCARGA_HIP_3	LinStatic		-7.72	436.26	0.00	0.00	0.00	-1430.40	1-30	0
1	29	PCARGA_HIP_3	LinStatic		-7.72	436.26	0.00	0.00	0.00	-1866.66	1-31	0
1	30	PCARGA_HIP_3	LinStatic		-7.72	436.26	0.00	0.00	0.00	-2302.92	1-32	0
1	31	PCARGA_HIP_3	LinStatic		-7.72	436.26	0.00	0.00	0.00	-2739.19	1-33	0
1	32	PCARGA_HIP_3	LinStatic		-7.72	436.26	0.00	0.00	0.00	-3175.45	1-34	0
1	33	PCARGA_HIP_3	LinStatic		-7.72	436.26	0.00	0.00	0.00	-3611.42	1-35	0
1	33.75	PCARGA_HIP_3	LinStatic		-7.72	436.26	0.00	0.00	0.00	-3938.62	1-36	0
1	34.5	PCARGA_HIP_3	LinStatic		-7.73	-437.14	0.00	0.00	0.00	-4264.82	1-37	0
1	35.25	PCARGA_HIP_3	LinStatic		-7.73	-437.14	0.00	0.00	0.00	-3938.96	1-38	0
1	36	PCARGA_HIP_3	LinStatic		-7.73	-437.14	0.00	0.00	0.00	-3611.40	1-39	0
1	37	PCARGA_HIP_3	LinStatic		-7.73	-437.14	0.00	0.00	0.00	-3175.26	1-40	0
1	38	PCARGA_HIP_3	LinStatic		-7.73	-437.14	0.00	0.00	0.00	-2738.12	1-41	0
1	39	PCARGA_HIP_3	LinStatic		-7.73	-437.14	0.00	0.00	0.00	-2298.98	1-42	0
1	40	PCARGA_HIP_3	LinStatic		-7.73	-437.14	0.00	0.00	0.00	-1861.84	1-43	0
1	41	PCARGA_HIP_3	LinStatic		-7.73	-437.14	0.00	0.00	0.00	-1424.70	1-44	0
1	42	PCARGA_HIP_3	LinStatic		-7.73	-437.14	0.00	0.00	0.00	-987.56	1-45	0
1	43	PCARGA_HIP_3	LinStatic		-7.73	-437.14	0.00	0.00	0.00	-550.42	1-46	0
1	44	PCARGA_HIP_3	LinStatic		-7.73	-437.14	0.00	0.00	0.00	-113.28	1-47	0
1	45	PCARGA_HIP_3	LinStatic		-7.73	-437.14	0.00	0.00	0.00	323.86	1-48	0
1	46	PCARGA_HIP_3	LinStatic		-7.73	-437.14	0.00	0.00	0.00	761.00	1-49	0
1	47	PCARGA_HIP_3	LinStatic		-7.73	-437.14	0.00	0.00	0.00	1198.14	1-50	0
1	48	PCARGA_HIP_3	LinStatic		-7.73	-437.14	0.00	0.00	0.00	1635.28	1-51	0
1	49	PCARGA_HIP_3	LinStatic		-7.73	-437.14	0.00	0.00	0.00	2072.42	1-52	0
1	50	PCARGA_HIP_3	LinStatic		-7.73	-299.85	0.00	0.00	0.00	2438.17	1-53	0
1	51	PCARGA_HIP_3	LinStatic		-7.73	-299.85	0.00	0.00	0.00	2738.01	1-54	0
1	52	PCARGA_HIP_3	LinStatic		-7.73	-299.85	0.00	0.00	0.00	3037.86	1-55	0
1	53	PCARGA_HIP_3	LinStatic		-7.73	-84.10	0.00	0.00	0.00	3333.39	1-56	0
1	54	PCARGA_HIP_3	LinStatic		-7.73	-84.10	0.00	0.00	0.00	3417.49	1-57	0
1	55	PCARGA_HIP_3	LinStatic		-7.73	-84.10	0.00	0.00	0.00	3501.59	1-58	0
1	56	PCARGA_HIP_3	LinStatic		-7.73	112.03	0.00	0.00	0.00	3581.77	1-59	0
1	57	PCARGA_HIP_3	LinStatic		-7.73	112.03	0.00	0.00	0.00	3469.74	1-60	0
1	58	PCARGA_HIP_3	LinStatic		-7.73	308.17	0.00	0.00	0.00	3228.25	1-61	0
1	59	PCARGA_HIP_3	LinStatic		-7.73	308.17	0.00	0.00	0.00	2920.09	1-62	0
1	60	PCARGA_HIP_3	LinStatic		-7.73	308.17	0.00	0.00	0.00	2611.92	1-63	0

ESTRUCTURA E1. ESFUERZOS EN TABLERO PARA TODOS LOS CASOS E HIPOTESIS DE CARGA

Frame	Station	OutputCase	CaseType	StepType	P	V2	V3	T	M2	M3	FrameElem	ElemStation
Text	m	Text	Text	Text	KN	KN	KN	KN-m	KN-m	KN-m	Text	m
1	61	PCARGA_HIP_3	LinStatic		-7.73	308.17	0.00	0.00	0.00	2303.76	1-64	0
1	62	PCARGA_HIP_3	LinStatic		-7.73	308.17	0.00	0.00	0.00	1995.59	1-65	0
1	63	PCARGA_HIP_3	LinStatic		-7.73	308.17	0.00	0.00	0.00	1687.43	1-66	0
1	64	PCARGA_HIP_3	LinStatic		-7.73	308.17	0.00	0.00	0.00	1379.26	1-67	0
1	65	PCARGA_HIP_3	LinStatic		-7.73	308.17	0.00	0.00	0.00	1071.09	1-68	0
1	66	PCARGA_HIP_3	LinStatic		-7.73	308.17	0.00	0.00	0.00	762.93	1-69	0
1	67	PCARGA_HIP_3	LinStatic		-7.73	308.17	0.00	0.00	0.00	455.06	1-70	0
1	67.5	PCARGA_HIP_3	LinStatic		-7.73	308.17	0.00	0.00	0.00	301.51	1-71	0
1	68.5	PCARGA_HIP_3	LinStatic		0.00	0.00	0.00	0.00	0.00	0.00	1-72	0
1	0	GRAD_TERM	Combination	Max	0.00	0.00	0.00	0.00	0.00	0.00	1-1	0
1	0.5	GRAD_TERM	Combination	Max	7.47	121.17	0.00	0.00	0.00	6.43	1-2	0
1	1.5	GRAD_TERM	Combination	Max	7.47	121.17	0.00	0.00	0.00	234.07	1-3	0
1	2	GRAD_TERM	Combination	Max	7.47	121.17	0.00	0.00	0.00	347.91	1-4	0
1	3	GRAD_TERM	Combination	Max	7.47	121.17	0.00	0.00	0.00	575.03	1-5	0
1	4	GRAD_TERM	Combination	Max	7.47	121.17	0.00	0.00	0.00	802.15	1-6	0
1	5	GRAD_TERM	Combination	Max	7.47	121.17	0.00	0.00	0.00	1029.27	1-7	0
1	6	GRAD_TERM	Combination	Max	7.47	121.17	0.00	0.00	0.00	1256.39	1-8	0
1	7	GRAD_TERM	Combination	Max	7.47	121.17	0.00	0.00	0.00	1483.51	1-9	0
1	8	GRAD_TERM	Combination	Max	7.47	121.17	0.00	0.00	0.00	1710.63	1-10	0
1	9	GRAD_TERM	Combination	Max	7.47	121.17	0.00	0.00	0.00	1937.75	1-11	0
1	10	GRAD_TERM	Combination	Max	7.47	121.17	0.00	0.00	0.00	2164.87	1-12	0
1	11	GRAD_TERM	Combination	Max	7.47	121.17	0.00	0.00	0.00	2391.99	1-13	0
1	12	GRAD_TERM	Combination	Max	7.47	121.17	0.00	0.00	0.00	2619.11	1-14	0
1	13	GRAD_TERM	Combination	Max	7.47	121.17	0.00	0.00	0.00	2846.23	1-15	0
1	14	GRAD_TERM	Combination	Max	7.47	121.17	0.00	0.00	0.00	3073.35	1-16	0
1	15	GRAD_TERM	Combination	Max	7.47	121.17	0.00	0.00	0.00	3300.47	1-17	0
1	16	GRAD_TERM	Combination	Max	7.47	121.17	0.00	0.00	0.00	3527.59	1-18	0
1	17	GRAD_TERM	Combination	Max	7.47	121.17	0.00	0.00	0.00	3754.71	1-19	0
1	18	GRAD_TERM	Combination	Max	7.47	121.17	0.00	0.00	0.00	3981.83	1-20	0
1	19	GRAD_TERM	Combination	Max	7.47	121.17	0.00	0.00	0.00	4208.95	1-21	0
1	20	GRAD_TERM	Combination	Max	7.47	121.17	0.00	0.00	0.00	4436.07	1-22	0
1	21	GRAD_TERM	Combination	Max	7.47	121.17	0.00	0.00	0.00	4663.19	1-23	0
1	22	GRAD_TERM	Combination	Max	7.47	121.17	0.00	0.00	0.00	4890.30	1-24	0
1	23	GRAD_TERM	Combination	Max	7.47	121.17	0.00	0.00	0.00	5117.42	1-25	0
1	24	GRAD_TERM	Combination	Max	7.47	121.17	0.00	0.00	0.00	5344.54	1-26	0
1	25	GRAD_TERM	Combination	Max	7.47	121.17	0.00	0.00	0.00	5571.66	1-27	0
1	26	GRAD_TERM	Combination	Max	7.47	121.17	0.00	0.00	0.00	5798.78	1-28	0
1	27	GRAD_TERM	Combination	Max	7.47	121.17	0.00	0.00	0.00	6025.90	1-29	0
1	28	GRAD_TERM	Combination	Max	7.47	121.17	0.00	0.00	0.00	6253.02	1-30	0
1	29	GRAD_TERM	Combination	Max	7.47	121.17	0.00	0.00	0.00	6480.14	1-31	0
1	30	GRAD_TERM	Combination	Max	7.47	121.17	0.00	0.00	0.00	6707.26	1-32	0
1	31	GRAD_TERM	Combination	Max	7.47	121.17	0.00	0.00	0.00	6934.38	1-33	0
1	32	GRAD_TERM	Combination	Max	7.47	121.17	0.00	0.00	0.00	7161.50	1-34	0
1	33	GRAD_TERM	Combination	Max	7.47	121.17	0.00	0.00	0.00	7388.62	1-35	0
1	33.75	GRAD_TERM	Combination	Max	7.47	121.17	0.00	0.00	0.00	7558.68	1-36	0
1	34.5	GRAD_TERM	Combination	Max	7.47	227.12	0.00	0.00	0.00	7729.02	1-37	0
1	35.25	GRAD_TERM	Combination	Max	7.47	227.12	0.00	0.00	0.00	7558.68	1-38	0
1	36	GRAD_TERM	Combination	Max	7.47	227.12	0.00	0.00	0.00	7388.62	1-39	0
1	37	GRAD_TERM	Combination	Max	7.47	227.12	0.00	0.00	0.00	7161.50	1-40	0
1	38	GRAD_TERM	Combination	Max	7.47	227.12	0.00	0.00	0.00	6934.38	1-41	0
1	39	GRAD_TERM	Combination	Max	7.47	227.12	0.00	0.00	0.00	6707.26	1-42	0
1	40	GRAD_TERM	Combination	Max	7.47	227.12	0.00	0.00	0.00	6480.14	1-43	0
1	41	GRAD_TERM	Combination	Max	7.47	227.12	0.00	0.00	0.00	6253.02	1-44	0
1	42	GRAD_TERM	Combination	Max	7.47	227.12	0.00	0.00	0.00	6025.90	1-45	0
1	43	GRAD_TERM	Combination	Max	7.47	227.12	0.00	0.00	0.00	5798.78	1-46	0
1	44	GRAD_TERM	Combination	Max	7.47	227.12	0.00	0.00	0.00	5571.66	1-47	0
1	45	GRAD_TERM	Combination	Max	7.47	227.12	0.00	0.00	0.00	5344.54	1-48	0
1	46	GRAD_TERM	Combination	Max	7.47	227.12	0.00	0.00	0.00	5117.42	1-49	0
1	47	GRAD_TERM	Combination	Max	7.47	227.12	0.00	0.00	0.00	4890.30	1-50	0
1	48	GRAD_TERM	Combination	Max	7.47	227.12	0.00	0.00	0.00	4663.19	1-51	0
1	49	GRAD_TERM	Combination	Max	7.47	227.12	0.00	0.00	0.00	4436.07	1-52	0
1	50	GRAD_TERM	Combination	Max	7.47	227.12	0.00	0.00	0.00	4208.95	1-53	0
1	51	GRAD_TERM	Combination	Max	7.47	227.12	0.00	0.00	0.00	3981.83	1-54	0
1	52	GRAD_TERM	Combination	Max	7.47	227.12	0.00	0.00	0.00	3754.71	1-55	0
1	53	GRAD_TERM	Combination	Max	7.47	227.12	0.00	0.00	0.00	3527.59	1-56	0
1	54	GRAD_TERM	Combination	Max	7.47	227.12	0.00	0.00	0.00	3300.47	1-57	0
1	55	GRAD_TERM	Combination	Max	7.47	227.12	0.00	0.00	0.00	3073.35	1-58	0
1	56	GRAD_TERM	Combination	Max	7.47	227.12	0.00	0.00	0.00	2846.23	1-59	0
1	57	GRAD_TERM	Combination	Max	7.47	227.12	0.00	0.00	0.00	2619.11	1-60	0
1	58	GRAD_TERM	Combination	Max	7.47	227.12	0.00	0.00	0.00	2391.99	1-61	0
1	59	GRAD_TERM	Combination	Max	7.47	227.12	0.00	0.00	0.00	2164.87	1-62	0
1	60	GRAD_TERM	Combination	Max	7.47	227.12	0.00	0.00	0.00	1937.75	1-63	0
1	61	GRAD_TERM	Combination	Max	7.47	227.12	0.00	0.00	0.00	1710.63	1-64	0
1	62	GRAD_TERM	Combination	Max	7.47	227.12	0.00	0.00	0.00	1483.51	1-65	0
1	63	GRAD_TERM	Combination	Max	7.47	227.12	0.00	0.00	0.00	1256.39	1-66	0
1	64	GRAD_TERM	Combination	Max	7.47	227.12	0.00	0.00	0.00	1029.27	1-67	0
1	65	GRAD_TERM	Combination	Max	7.47	227.12	0.00	0.00	0.00	802.15	1-68	0
1	66	GRAD_TERM	Combination	Max	7.47	227.12	0.00	0.00	0.00	575.03	1-69	0
1	67	GRAD_TERM	Combination	Max	7.47	227.12	0.00	0.00	0.00	347.63	1-70	0
1	67.5	GRAD_TERM	Combination	Max	7.47	227.12	0.00	0.00	0.00	233.55	1-71	0
1	68.5	GRAD_TERM	Combination	Max	0.00	0.00	0.00	0.00	0.00	0.00	1-72	0

ESTRUCTURA E1. ESFUERZOS EN TABLERO PARA TODOS LOS CASOS E HIPOTESIS DE CARGA

Frame	Station	OutputCase	CaseType	StepType	P	V2	V3	T	M2	M3	FrameElem	ElemStation
Text	m	Text	Text	Text	KN	KN	KN	KN-m	KN-m	KN-m	Text	m
1	0	GRAD_TERM	Combination	Min	0.00	0.00	0.00	0.00	0.00	0.00	1-1	0
1	0.5	GRAD_TERM	Combination	Min	-3.98	-227.12	0.00	0.00	0.00	-3.43	1-2	0
1	1.5	GRAD_TERM	Combination	Min	-3.98	-227.12	0.00	0.00	0.00	-124.88	1-3	0
1	2	GRAD_TERM	Combination	Min	-3.98	-227.12	0.00	0.00	0.00	-185.61	1-4	0
1	3	GRAD_TERM	Combination	Min	-3.98	-227.12	0.00	0.00	0.00	-306.78	1-5	0
1	4	GRAD_TERM	Combination	Min	-3.98	-227.12	0.00	0.00	0.00	-427.95	1-6	0
1	5	GRAD_TERM	Combination	Min	-3.98	-227.12	0.00	0.00	0.00	-549.12	1-7	0
1	6	GRAD_TERM	Combination	Min	-3.98	-227.12	0.00	0.00	0.00	-670.28	1-8	0
1	7	GRAD_TERM	Combination	Min	-3.98	-227.12	0.00	0.00	0.00	-791.45	1-9	0
1	8	GRAD_TERM	Combination	Min	-3.98	-227.12	0.00	0.00	0.00	-912.62	1-10	0
1	9	GRAD_TERM	Combination	Min	-3.98	-227.12	0.00	0.00	0.00	-1033.79	1-11	0
1	10	GRAD_TERM	Combination	Min	-3.98	-227.12	0.00	0.00	0.00	-1154.96	1-12	0
1	11	GRAD_TERM	Combination	Min	-3.98	-227.12	0.00	0.00	0.00	-1276.13	1-13	0
1	12	GRAD_TERM	Combination	Min	-3.98	-227.12	0.00	0.00	0.00	-1397.29	1-14	0
1	13	GRAD_TERM	Combination	Min	-3.98	-227.12	0.00	0.00	0.00	-1518.46	1-15	0
1	14	GRAD_TERM	Combination	Min	-3.98	-227.12	0.00	0.00	0.00	-1639.63	1-16	0
1	15	GRAD_TERM	Combination	Min	-3.98	-227.12	0.00	0.00	0.00	-1760.80	1-17	0
1	16	GRAD_TERM	Combination	Min	-3.98	-227.12	0.00	0.00	0.00	-1881.97	1-18	0
1	17	GRAD_TERM	Combination	Min	-3.98	-227.12	0.00	0.00	0.00	-2003.14	1-19	0
1	18	GRAD_TERM	Combination	Min	-3.98	-227.12	0.00	0.00	0.00	-2124.30	1-20	0
1	19	GRAD_TERM	Combination	Min	-3.98	-227.12	0.00	0.00	0.00	-2245.47	1-21	0
1	20	GRAD_TERM	Combination	Min	-3.98	-227.12	0.00	0.00	0.00	-2366.64	1-22	0
1	21	GRAD_TERM	Combination	Min	-3.98	-227.12	0.00	0.00	0.00	-2487.81	1-23	0
1	22	GRAD_TERM	Combination	Min	-3.98	-227.12	0.00	0.00	0.00	-2608.98	1-24	0
1	23	GRAD_TERM	Combination	Min	-3.98	-227.12	0.00	0.00	0.00	-2730.15	1-25	0
1	24	GRAD_TERM	Combination	Min	-3.98	-227.12	0.00	0.00	0.00	-2851.31	1-26	0
1	25	GRAD_TERM	Combination	Min	-3.98	-227.12	0.00	0.00	0.00	-2972.48	1-27	0
1	26	GRAD_TERM	Combination	Min	-3.98	-227.12	0.00	0.00	0.00	-3093.65	1-28	0
1	27	GRAD_TERM	Combination	Min	-3.98	-227.12	0.00	0.00	0.00	-3214.82	1-29	0
1	28	GRAD_TERM	Combination	Min	-3.98	-227.12	0.00	0.00	0.00	-3335.99	1-30	0
1	29	GRAD_TERM	Combination	Min	-3.98	-227.12	0.00	0.00	0.00	-3457.16	1-31	0
1	30	GRAD_TERM	Combination	Min	-3.98	-227.12	0.00	0.00	0.00	-3578.32	1-32	0
1	31	GRAD_TERM	Combination	Min	-3.98	-227.12	0.00	0.00	0.00	-3699.49	1-33	0
1	32	GRAD_TERM	Combination	Min	-3.98	-227.12	0.00	0.00	0.00	-3820.66	1-34	0
1	33	GRAD_TERM	Combination	Min	-3.98	-227.12	0.00	0.00	0.00	-3941.68	1-35	0
1	33.75	GRAD_TERM	Combination	Min	-3.98	-227.12	0.00	0.00	0.00	-4032.56	1-36	0
1	34.5	GRAD_TERM	Combination	Min	-3.98	-121.17	0.00	0.00	0.00	-4123.43	1-37	0
1	35.25	GRAD_TERM	Combination	Min	-3.98	-121.17	0.00	0.00	0.00	-4032.56	1-38	0
1	36	GRAD_TERM	Combination	Min	-3.98	-121.17	0.00	0.00	0.00	-3941.83	1-39	0
1	37	GRAD_TERM	Combination	Min	-3.98	-121.17	0.00	0.00	0.00	-3820.66	1-40	0
1	38	GRAD_TERM	Combination	Min	-3.98	-121.17	0.00	0.00	0.00	-3699.49	1-41	0
1	39	GRAD_TERM	Combination	Min	-3.98	-121.17	0.00	0.00	0.00	-3578.32	1-42	0
1	40	GRAD_TERM	Combination	Min	-3.98	-121.17	0.00	0.00	0.00	-3457.16	1-43	0
1	41	GRAD_TERM	Combination	Min	-3.98	-121.17	0.00	0.00	0.00	-3335.99	1-44	0
1	42	GRAD_TERM	Combination	Min	-3.98	-121.17	0.00	0.00	0.00	-3214.82	1-45	0
1	43	GRAD_TERM	Combination	Min	-3.98	-121.17	0.00	0.00	0.00	-3093.65	1-46	0
1	44	GRAD_TERM	Combination	Min	-3.98	-121.17	0.00	0.00	0.00	-2972.48	1-47	0
1	45	GRAD_TERM	Combination	Min	-3.98	-121.17	0.00	0.00	0.00	-2851.31	1-48	0
1	46	GRAD_TERM	Combination	Min	-3.98	-121.17	0.00	0.00	0.00	-2730.15	1-49	0
1	47	GRAD_TERM	Combination	Min	-3.98	-121.17	0.00	0.00	0.00	-2608.98	1-50	0
1	48	GRAD_TERM	Combination	Min	-3.98	-121.17	0.00	0.00	0.00	-2487.81	1-51	0
1	49	GRAD_TERM	Combination	Min	-3.98	-121.17	0.00	0.00	0.00	-2366.64	1-52	0
1	50	GRAD_TERM	Combination	Min	-3.98	-121.17	0.00	0.00	0.00	-2245.47	1-53	0
1	51	GRAD_TERM	Combination	Min	-3.98	-121.17	0.00	0.00	0.00	-2124.30	1-54	0
1	52	GRAD_TERM	Combination	Min	-3.98	-121.17	0.00	0.00	0.00	-2003.14	1-55	0
1	53	GRAD_TERM	Combination	Min	-3.98	-121.17	0.00	0.00	0.00	-1881.97	1-56	0
1	54	GRAD_TERM	Combination	Min	-3.98	-121.17	0.00	0.00	0.00	-1760.80	1-57	0
1	55	GRAD_TERM	Combination	Min	-3.98	-121.17	0.00	0.00	0.00	-1639.63	1-58	0
1	56	GRAD_TERM	Combination	Min	-3.98	-121.17	0.00	0.00	0.00	-1518.46	1-59	0
1	57	GRAD_TERM	Combination	Min	-3.98	-121.17	0.00	0.00	0.00	-1397.29	1-60	0
1	58	GRAD_TERM	Combination	Min	-3.98	-121.17	0.00	0.00	0.00	-1276.13	1-61	0
1	59	GRAD_TERM	Combination	Min	-3.98	-121.17	0.00	0.00	0.00	-1154.96	1-62	0
1	60	GRAD_TERM	Combination	Min	-3.98	-121.17	0.00	0.00	0.00	-1033.79	1-63	0
1	61	GRAD_TERM	Combination	Min	-3.98	-121.17	0.00	0.00	0.00	-912.62	1-64	0
1	62	GRAD_TERM	Combination	Min	-3.98	-121.17	0.00	0.00	0.00	-791.45	1-65	0
1	63	GRAD_TERM	Combination	Min	-3.98	-121.17	0.00	0.00	0.00	-670.28	1-66	0
1	64	GRAD_TERM	Combination	Min	-3.98	-121.17	0.00	0.00	0.00	-549.12	1-67	0
1	65	GRAD_TERM	Combination	Min	-3.98	-121.17	0.00	0.00	0.00	-427.95	1-68	0
1	66	GRAD_TERM	Combination	Min	-3.98	-121.17	0.00	0.00	0.00	-306.78	1-69	0
1	67	GRAD_TERM	Combination	Min	-3.98	-121.17	0.00	0.00	0.00	-185.46	1-70	0
1	67.5	GRAD_TERM	Combination	Min	-3.98	-121.17	0.00	0.00	0.00	-124.60	1-71	0
1	68.5	GRAD_TERM	Combination	Min	0.00	0.00	0.00	0.00	0.00	0.00	1-72	0
1	0	CUASIP	Combination	Max	0.00	0.00	0.00	0.00	0.00	0.00	1-1	0
1	0.5	CUASIP	Combination	Max	-28938.56	-1357.94	0.00	0.00	0.00	-2764.45	1-2	0
1	1.5	CUASIP	Combination	Max	-29003.31	-1115.03	0.00	0.00	0.00	-3382.38	1-3	0
1	2	CUASIP	Combination	Max	-29067.96	-1063.77	0.00	0.00	0.00	-3880.79	1-4	0
1	3	CUASIP	Combination	Max	-29132.50	-946.07	0.00	0.00	0.00	-2741.73	1-5	0
1	4	CUASIP	Combination	Max	-29261.29	-903.82	0.00	0.00	0.00	-1756.96	1-6	0
1	5	CUASIP	Combination	Max	-29325.53	-787.17	0.00	0.00	0.00	-811.42	1-7	0
1	6	CUASIP	Combination	Max	-29389.67	-670.87	0.00	0.00	0.00	31.65	1-8	0
1	7	CUASIP	Combination	Max	-29453.70	-554.91	0.00	0.00	0.00	772.87	1-9	0

ESTRUCTURA E1. ESFUERZOS EN TABLERO PARA TODOS LOS CASOS E HIPOTESIS DE CARGA

Frame	Station	OutputCase	CaseType	StepType	P	V2	V3	T	M2	M3	FrameElem	ElemStation
Text	m	Text	Text	Text	KN	KN	KN	KN-m	KN-m	KN-m	Text	m
1	8	CUASIP	Combination	Max	-29581.41	-516.07	0.00	0.00	0.00	1358.08	1-10	0
1	9	CUASIP	Combination	Max	-29645.08	-401.09	0.00	0.00	0.00	1912.45	1-11	0
1	10	CUASIP	Combination	Max	-29708.65	-286.45	0.00	0.00	0.00	2367.08	1-12	0
1	11	CUASIP	Combination	Max	-29835.45	-250.28	0.00	0.00	0.00	2651.24	1-13	0
1	12	CUASIP	Combination	Max	-29898.69	-136.67	0.00	0.00	0.00	2923.99	1-14	0
1	13	CUASIP	Combination	Max	-29961.82	-23.39	0.00	0.00	0.00	3099.13	1-15	0
1	14	CUASIP	Combination	Max	-30024.85	89.55	0.00	0.00	0.00	3177.26	1-16	0
1	15	CUASIP	Combination	Max	-30144.42	122.34	0.00	0.00	0.00	3092.83	1-17	0
1	16	CUASIP	Combination	Max	-30186.47	146.55	0.00	0.00	0.00	2993.12	1-18	0
1	17	CUASIP	Combination	Max	-30222.67	170.40	0.00	0.00	0.00	2912.85	1-19	0
1	18	CUASIP	Combination	Max	-30157.16	28.01	0.00	0.00	0.00	2830.07	1-20	0
1	19	CUASIP	Combination	Max	-30074.87	54.82	0.00	0.00	0.00	2888.28	1-21	0
1	20	CUASIP	Combination	Max	-29991.85	82.62	0.00	0.00	0.00	2957.83	1-22	0
1	21	CUASIP	Combination	Max	-29908.11	111.39	0.00	0.00	0.00	3036.92	1-23	0
1	22	CUASIP	Combination	Max	-29738.48	-20.13	0.00	0.00	0.00	3118.18	1-24	0
1	23	CUASIP	Combination	Max	-29652.45	11.28	0.00	0.00	0.00	3246.57	1-25	0
1	24	CUASIP	Combination	Max	-29565.71	43.72	0.00	0.00	0.00	3378.25	1-26	0
1	25	CUASIP	Combination	Max	-29390.23	-80.33	0.00	0.00	0.00	3485.32	1-27	0
1	26	CUASIP	Combination	Max	-29301.51	-44.73	0.00	0.00	0.00	3650.83	1-28	0
1	27	CUASIP	Combination	Max	-29212.16	-8.04	0.00	0.00	0.00	3812.85	1-29	0
1	28	CUASIP	Combination	Max	-29031.58	-123.52	0.00	0.00	0.00	3916.76	1-30	0
1	29	CUASIP	Combination	Max	-28940.37	-83.56	0.00	0.00	0.00	4096.13	1-31	0
1	30	CUASIP	Combination	Max	-28863.49	597.00	0.00	0.00	0.00	4207.81	1-32	0
1	31	CUASIP	Combination	Max	-28737.84	1278.65	0.00	0.00	0.00	3542.66	1-33	0
1	32	CUASIP	Combination	Max	-28464.70	2438.12	0.00	0.00	0.00	2267.79	1-34	0
1	33	CUASIP	Combination	Max	-28317.46	3107.32	0.00	0.00	0.00	1050.51	1-35	0
1	33.75	CUASIP	Combination	Max	-28162.26	3767.90	0.00	0.00	0.00	-1118.74	1-36	0
1	34.5	CUASIP	Combination	Max	-28162.26	-3781.72	0.00	0.00	0.00	-3884.54	1-37	0
1	35.25	CUASIP	Combination	Max	-28317.46	-3121.13	0.00	0.00	0.00	-1219.86	1-38	0
1	36	CUASIP	Combination	Max	-28464.70	-2456.07	0.00	0.00	0.00	-92.23	1-39	0
1	37	CUASIP	Combination	Max	-28737.84	-1296.59	0.00	0.00	0.00	2342.12	1-40	0
1	38	CUASIP	Combination	Max	-28863.49	-614.94	0.00	0.00	0.00	3688.91	1-41	0
1	39	CUASIP	Combination	Max	-28940.37	65.62	0.00	0.00	0.00	4257.78	1-42	0
1	40	CUASIP	Combination	Max	-29031.57	105.58	0.00	0.00	0.00	4118.36	1-43	0
1	41	CUASIP	Combination	Max	-29212.15	-9.90	0.00	0.00	0.00	3898.97	1-44	0
1	42	CUASIP	Combination	Max	-29301.51	26.79	0.00	0.00	0.00	3773.63	1-45	0
1	43	CUASIP	Combination	Max	-29390.23	62.39	0.00	0.00	0.00	3643.73	1-46	0
1	44	CUASIP	Combination	Max	-29565.71	-61.66	0.00	0.00	0.00	3412.59	1-47	0
1	45	CUASIP	Combination	Max	-29652.45	-29.22	0.00	0.00	0.00	3313.35	1-48	0
1	46	CUASIP	Combination	Max	-29738.48	2.19	0.00	0.00	0.00	3216.38	1-49	0
1	47	CUASIP	Combination	Max	-29908.11	-129.34	0.00	0.00	0.00	3003.58	1-50	0
1	48	CUASIP	Combination	Max	-29991.85	-100.56	0.00	0.00	0.00	2953.27	1-51	0
1	49	CUASIP	Combination	Max	-30074.87	-72.77	0.00	0.00	0.00	2911.51	1-52	0
1	50	CUASIP	Combination	Max	-30157.16	-45.95	0.00	0.00	0.00	2880.12	1-53	0
1	51	CUASIP	Combination	Max	-30222.67	-188.35	0.00	0.00	0.00	2820.50	1-54	0
1	52	CUASIP	Combination	Max	-30186.47	-164.49	0.00	0.00	0.00	2924.64	1-55	0
1	53	CUASIP	Combination	Max	-30144.42	-140.29	0.00	0.00	0.00	3048.56	1-56	0
1	54	CUASIP	Combination	Max	-30024.84	-107.50	0.00	0.00	0.00	3165.77	1-57	0
1	55	CUASIP	Combination	Max	-29961.82	5.44	0.00	0.00	0.00	3200.58	1-58	0
1	56	CUASIP	Combination	Max	-29898.69	118.72	0.00	0.00	0.00	3138.73	1-59	0
1	57	CUASIP	Combination	Max	-29835.45	232.34	0.00	0.00	0.00	2979.60	1-60	0
1	58	CUASIP	Combination	Max	-29708.65	268.50	0.00	0.00	0.00	2731.60	1-61	0
1	59	CUASIP	Combination	Max	-29645.08	383.14	0.00	0.00	0.00	2391.61	1-62	0
1	60	CUASIP	Combination	Max	-29581.41	498.12	0.00	0.00	0.00	1952.23	1-63	0
1	61	CUASIP	Combination	Max	-29453.70	536.97	0.00	0.00	0.00	1405.86	1-64	0
1	62	CUASIP	Combination	Max	-29389.67	652.92	0.00	0.00	0.00	780.60	1-65	0
1	63	CUASIP	Combination	Max	-29325.53	769.23	0.00	0.00	0.00	53.84	1-66	0
1	64	CUASIP	Combination	Max	-29261.29	885.88	0.00	0.00	0.00	-775.05	1-67	0
1	65	CUASIP	Combination	Max	-29132.50	928.13	0.00	0.00	0.00	-1711.57	1-68	0
1	66	CUASIP	Combination	Max	-29067.96	1045.82	0.00	0.00	0.00	-2734.93	1-69	0
1	67	CUASIP	Combination	Max	-29003.31	1163.86	0.00	0.00	0.00	-2760.12	1-70	0
1	67.5	CUASIP	Combination	Max	-28938.56	1215.47	0.00	0.00	0.00	-1389.68	1-71	0
1	68.5	CUASIP	Combination	Max	0.00	-158.31	0.00	0.00	0.00	-39.58	1-72	0
1	0	CUASIP	Combination	Min	0.00	0.00	0.00	0.00	0.00	0.00	1-1	0
1	0.5	CUASIP	Combination	Min	-28944.29	-1532.08	0.00	0.00	0.00	-2768.39	1-2	0
1	1.5	CUASIP	Combination	Min	-29009.03	-1289.17	0.00	0.00	0.00	-3561.85	1-3	0
1	2	CUASIP	Combination	Min	-29073.68	-1237.91	0.00	0.00	0.00	-4147.55	1-4	0
1	3	CUASIP	Combination	Min	-29138.23	-1120.22	0.00	0.00	0.00	-3182.64	1-5	0
1	4	CUASIP	Combination	Min	-29267.02	-1077.97	0.00	0.00	0.00	-2372.01	1-6	0
1	5	CUASIP	Combination	Min	-29331.26	-961.32	0.00	0.00	0.00	-1600.61	1-7	0
1	6	CUASIP	Combination	Min	-29395.39	-845.01	0.00	0.00	0.00	-931.69	1-8	0
1	7	CUASIP	Combination	Min	-29459.43	-729.06	0.00	0.00	0.00	-364.61	1-9	0
1	8	CUASIP	Combination	Min	-29587.13	-690.21	0.00	0.00	0.00	46.46	1-10	0
1	9	CUASIP	Combination	Min	-29650.80	-575.23	0.00	0.00	0.00	426.68	1-11	0
1	10	CUASIP	Combination	Min	-29714.37	-460.59	0.00	0.00	0.00	707.17	1-12	0
1	11	CUASIP	Combination	Min	-29841.18	-424.43	0.00	0.00	0.00	817.19	1-13	0
1	12	CUASIP	Combination	Min	-29904.42	-310.81	0.00	0.00	0.00	915.79	1-14	0
1	13	CUASIP	Combination	Min	-29967.55	-197.53	0.00	0.00	0.00	916.79	1-15	0
1	14	CUASIP	Combination	Min	-30030.57	-84.59	0.00	0.00	0.00	820.77	1-16	0
1	15	CUASIP	Combination	Min	-30150.14	-51.81	0.00	0.00	0.00	562.20	1-17	0
1	16	CUASIP	Combination	Min	-30192.19	-27.60	0.00	0.00	0.00	288.35	1-18	0

ESTRUCTURA E1. ESFUERZOS EN TABLERO PARA TODOS LOS CASOS E HIPOTESIS DE CARGA

Frame	Station	OutputCase	CaseType	StepType	P	V2	V3	T	M2	M3	FrameElem	ElemStation
Text	m	Text	Text	Text	KN	KN	KN	KN-m	KN-m	KN-m	Text	m
1	17	CUASIP	Combination	Min	-30228.40	-3.74	0.00	0.00	0.00	33.93	1-19	0
1	18	CUASIP	Combination	Min	-30162.88	-146.14	0.00	0.00	0.00	-222.99	1-20	0
1	19	CUASIP	Combination	Min	-30080.59	-119.32	0.00	0.00	0.00	-338.93	1-21	0
1	20	CUASIP	Combination	Min	-29997.58	-91.53	0.00	0.00	0.00	-443.53	1-22	0
1	21	CUASIP	Combination	Min	-29913.84	-62.75	0.00	0.00	0.00	-538.58	1-23	0
1	22	CUASIP	Combination	Min	-29744.20	-194.28	0.00	0.00	0.00	-631.46	1-24	0
1	23	CUASIP	Combination	Min	-29658.17	-162.87	0.00	0.00	0.00	-677.22	1-25	0
1	24	CUASIP	Combination	Min	-29571.44	-130.42	0.00	0.00	0.00	-719.68	1-26	0
1	25	CUASIP	Combination	Min	-29395.96	-254.48	0.00	0.00	0.00	-786.75	1-27	0
1	26	CUASIP	Combination	Min	-29307.24	-218.87	0.00	0.00	0.00	-795.39	1-28	0
1	27	CUASIP	Combination	Min	-29217.88	-182.19	0.00	0.00	0.00	-807.51	1-29	0
1	28	CUASIP	Combination	Min	-29037.30	-297.66	0.00	0.00	0.00	-877.75	1-30	0
1	29	CUASIP	Combination	Min	-28946.09	-257.71	0.00	0.00	0.00	-872.52	1-31	0
1	30	CUASIP	Combination	Min	-28869.22	422.86	0.00	0.00	0.00	-934.98	1-32	0
1	31	CUASIP	Combination	Min	-28743.57	1104.50	0.00	0.00	0.00	-1774.27	1-33	0
1	32	CUASIP	Combination	Min	-28470.43	2263.98	0.00	0.00	0.00	-3225.29	1-34	0
1	33	CUASIP	Combination	Min	-28323.18	2933.17	0.00	0.00	0.00	-4614.50	1-35	0
1	33.75	CUASIP	Combination	Min	-28167.98	3593.76	0.00	0.00	0.00	-6914.35	1-36	0
1	34.5	CUASIP	Combination	Min	-28167.98	-3955.87	0.00	0.00	0.00	-9816.77	1-37	0
1	35.25	CUASIP	Combination	Min	-28323.18	-3295.28	0.00	0.00	0.00	-7015.47	1-38	0
1	36	CUASIP	Combination	Min	-28470.42	-2630.21	0.00	0.00	0.00	-5751.46	1-39	0
1	37	CUASIP	Combination	Min	-28743.57	-1470.73	0.00	0.00	0.00	-3148.96	1-40	0
1	38	CUASIP	Combination	Min	-28869.22	-789.09	0.00	0.00	0.00	-1628.03	1-41	0
1	39	CUASIP	Combination	Min	-28946.09	-108.52	0.00	0.00	0.00	-885.01	1-42	0
1	40	CUASIP	Combination	Min	-29037.30	-68.57	0.00	0.00	0.00	-850.29	1-43	0
1	41	CUASIP	Combination	Min	-29217.88	-184.04	0.00	0.00	0.00	-895.53	1-44	0
1	42	CUASIP	Combination	Min	-29307.24	-147.36	0.00	0.00	0.00	-846.73	1-45	0
1	43	CUASIP	Combination	Min	-29395.95	-111.75	0.00	0.00	0.00	-802.49	1-46	0
1	44	CUASIP	Combination	Min	-29571.44	-235.81	0.00	0.00	0.00	-859.48	1-47	0
1	45	CUASIP	Combination	Min	-29658.17	-203.36	0.00	0.00	0.00	-784.58	1-48	0
1	46	CUASIP	Combination	Min	-29744.20	-171.95	0.00	0.00	0.00	-707.41	1-49	0
1	47	CUASIP	Combination	Min	-29913.84	-303.48	0.00	0.00	0.00	-746.06	1-50	0
1	48	CUASIP	Combination	Min	-29997.58	-274.70	0.00	0.00	0.00	-622.23	1-51	0
1	49	CUASIP	Combination	Min	-30080.59	-246.91	0.00	0.00	0.00	-489.84	1-52	0
1	50	CUASIP	Combination	Min	-30162.88	-220.09	0.00	0.00	0.00	-347.09	1-53	0
1	51	CUASIP	Combination	Min	-30228.40	-362.49	0.00	0.00	0.00	-232.56	1-54	0
1	52	CUASIP	Combination	Min	-30192.19	-338.64	0.00	0.00	0.00	45.71	1-55	0
1	53	CUASIP	Combination	Min	-30150.14	-314.43	0.00	0.00	0.00	343.78	1-56	0
1	54	CUASIP	Combination	Min	-30030.57	-281.65	0.00	0.00	0.00	635.14	1-57	0
1	55	CUASIP	Combination	Min	-29967.55	-168.70	0.00	0.00	0.00	844.10	1-58	0
1	56	CUASIP	Combination	Min	-29904.42	-55.43	0.00	0.00	0.00	956.38	1-59	0
1	57	CUASIP	Combination	Min	-29841.18	58.19	0.00	0.00	0.00	971.40	1-60	0
1	58	CUASIP	Combination	Min	-29714.37	94.36	0.00	0.00	0.00	897.55	1-61	0
1	59	CUASIP	Combination	Min	-29650.80	209.00	0.00	0.00	0.00	731.70	1-62	0
1	60	CUASIP	Combination	Min	-29587.13	323.97	0.00	0.00	0.00	466.46	1-63	0
1	61	CUASIP	Combination	Min	-29459.43	362.82	0.00	0.00	0.00	94.23	1-64	0
1	62	CUASIP	Combination	Min	-29395.39	478.78	0.00	0.00	0.00	-356.88	1-65	0
1	63	CUASIP	Combination	Min	-29331.26	595.08	0.00	0.00	0.00	-909.50	1-66	0
1	64	CUASIP	Combination	Min	-29267.02	711.73	0.00	0.00	0.00	-1564.25	1-67	0
1	65	CUASIP	Combination	Min	-29138.23	753.98	0.00	0.00	0.00	-2332.62	1-68	0
1	66	CUASIP	Combination	Min	-29073.68	871.67	0.00	0.00	0.00	-3179.84	1-69	0
1	67	CUASIP	Combination	Min	-29009.03	989.72	0.00	0.00	0.00	-3033.67	1-70	0
1	67.5	CUASIP	Combination	Min	-28944.29	1041.33	0.00	0.00	0.00	-1564.76	1-71	0
1	68.5	CUASIP	Combination	Min	0.00	-158.31	0.00	0.00	0.00	-39.58	1-72	0
1	0	FREC_01	Combination	Max	0.00	0.00	0.00	0.00	0.00	0.00	1-1	0
1	0.5	FREC_01	Combination	Max	-28938.71	-1252.43	0.27	1086.74	0.44	-2764.58	1-2	0
1	1.5	FREC_01	Combination	Max	-29003.46	-1009.52	0.27	1063.78	0.50	-2461.90	1-3	0
1	2	FREC_01	Combination	Max	-29068.10	-958.26	0.27	1035.82	0.54	-2549.86	1-4	0
1	3	FREC_01	Combination	Max	-29132.65	-840.57	0.27	1010.72	0.61	-606.11	1-5	0
1	4	FREC_01	Combination	Max	-29261.44	-798.31	0.27	985.53	0.69	1134.52	1-6	0
1	5	FREC_01	Combination	Max	-29325.68	-673.80	0.27	960.93	0.76	2771.54	1-7	0
1	6	FREC_01	Combination	Max	-29389.82	-530.10	0.27	936.39	0.84	4236.53	1-8	0
1	7	FREC_01	Combination	Max	-29453.85	-386.85	0.27	911.84	0.91	5530.73	1-9	0
1	8	FREC_01	Combination	Max	-29581.56	-320.85	0.27	887.29	0.99	6600.71	1-10	0
1	9	FREC_01	Combination	Max	-29645.23	-178.89	0.27	862.75	1.06	7572.44	1-11	0
1	10	FREC_01	Combination	Max	-29708.79	-37.47	0.27	838.20	1.14	8377.99	1-12	0
1	11	FREC_01	Combination	Max	-29835.60	25.26	0.27	813.65	1.21	8947.69	1-13	0
1	12	FREC_01	Combination	Max	-29898.84	165.18	0.27	789.10	1.29	9441.78	1-14	0
1	13	FREC_01	Combination	Max	-29961.97	304.48	0.27	764.56	1.36	9775.35	1-15	0
1	14	FREC_01	Combination	Max	-30024.99	443.13	0.27	740.01	1.44	9950.41	1-16	0
1	15	FREC_01	Combination	Max	-30144.56	501.28	0.27	715.46	1.51	9902.95	1-17	0
1	16	FREC_01	Combination	Max	-30186.61	560.23	0.27	690.92	1.59	9781.89	1-18	0
1	17	FREC_01	Combination	Max	-30222.82	624.49	0.27	666.37	1.66	9639.76	1-19	0
1	18	FREC_01	Combination	Max	-30157.30	522.06	0.27	641.82	1.74	9439.55	1-20	0
1	19	FREC_01	Combination	Max	-30075.02	588.39	0.27	617.27	1.81	9326.11	1-21	0
1	20	FREC_01	Combination	Max	-29992.00	655.21	0.27	592.73	1.89	9171.83	1-22	0
1	21	FREC_01	Combination	Max	-29908.26	722.50	0.27	568.18	1.96	8977.05	1-23	0
1	22	FREC_01	Combination	Max	-29738.63	628.95	0.27	543.63	2.03	8736.64	1-24	0
1	23	FREC_01	Combination	Max	-29652.60	697.75	0.27	519.09	2.11	8497.92	1-25	0
1	24	FREC_01	Combination	Max	-29565.86	766.99	0.27	494.54	2.18	8219.55	1-26	0
1	25	FREC_01	Combination	Max	-29390.38	679.10	0.27	469.99	2.26	7876.21	1-27	0

ESTRUCTURA E1. ESFUERZOS EN TABLERO PARA TODOS LOS CASOS E HIPOTESIS DE CARGA

Frame	Station	OutputCase	CaseType	StepType	P	V2	V3	T	M2	M3	FrameElem	ElemStation
Text	m	Text	Text	Text	KN	KN	KN	KN-m	KN-m	KN-m	Text	m
1	26	FREC_01	Combination	Max	-29301.66	750.21	0.27	445.45	2.33	7553.68	1-28	0
1	27	FREC_01	Combination	Max	-29212.30	821.71	0.27	420.90	2.41	7192.86	1-29	0
1	28	FREC_01	Combination	Max	-29031.72	740.33	0.27	396.35	2.48	6742.06	1-30	0
1	29	FREC_01	Combination	Max	-28940.51	813.64	0.27	371.80	2.56	6337.93	1-31	0
1	30	FREC_01	Combination	Max	-28863.64	1526.77	0.27	347.26	2.63	5840.50	1-32	0
1	31	FREC_01	Combination	Max	-28737.99	2240.19	0.27	322.71	2.71	4543.91	1-33	0
1	32	FREC_01	Combination	Max	-28464.85	3430.60	0.27	299.99	2.78	2618.68	1-34	0
1	33	FREC_01	Combination	Max	-28317.61	4129.87	0.27	283.91	2.86	735.79	1-35	0
1	33.75	FREC_01	Combination	Max	-28162.41	4815.69	0.27	287.68	2.92	-1947.93	1-36	0
1	34.5	FREC_01	Combination	Max	-28162.40	-3811.12	0.09	964.90	2.96	-4980.01	1-37	0
1	35.25	FREC_01	Combination	Max	-28317.60	-3150.53	0.09	939.64	2.90	-2051.33	1-38	0
1	36	FREC_01	Combination	Max	-28464.85	-2485.47	0.09	911.68	2.84	-415.34	1-39	0
1	37	FREC_01	Combination	Max	-28737.99	-1319.02	0.09	885.69	2.75	2681.60	1-40	0
1	38	FREC_01	Combination	Max	-28863.64	-625.08	0.09	860.90	2.67	4676.16	1-41	0
1	39	FREC_01	Combination	Max	-28940.51	68.69	0.09	836.30	2.60	5874.40	1-42	0
1	40	FREC_01	Combination	Max	-29031.72	122.75	0.09	811.76	2.53	6342.52	1-43	0
1	41	FREC_01	Combination	Max	-29212.30	22.24	0.09	787.21	2.45	6705.55	1-44	0
1	42	FREC_01	Combination	Max	-29301.66	74.73	0.09	762.66	2.38	7134.28	1-45	0
1	43	FREC_01	Combination	Max	-29390.38	126.95	0.09	738.11	2.30	7527.04	1-46	0
1	44	FREC_01	Combination	Max	-29565.86	20.30	0.09	713.57	2.23	7784.21	1-47	0
1	45	FREC_01	Combination	Max	-29652.60	70.89	0.09	689.02	2.16	8136.04	1-48	0
1	46	FREC_01	Combination	Max	-29738.63	121.18	0.09	664.47	2.08	8450.18	1-49	0
1	47	FREC_01	Combination	Max	-29908.26	9.22	0.09	639.93	2.01	8605.93	1-50	0
1	48	FREC_01	Combination	Max	-29992.00	58.23	0.09	615.38	1.94	8879.10	1-51	0
1	49	FREC_01	Combination	Max	-30075.02	106.89	0.09	590.83	1.86	9113.37	1-52	0
1	50	FREC_01	Combination	Max	-30157.30	155.19	0.09	566.28	1.79	9308.29	1-53	0
1	51	FREC_01	Combination	Max	-30222.82	34.85	0.09	541.74	1.71	9423.10	1-54	0
1	52	FREC_01	Combination	Max	-30186.61	89.27	0.09	517.19	1.64	9647.75	1-55	0
1	53	FREC_01	Combination	Max	-30144.56	152.41	0.09	492.64	1.57	9838.26	1-56	0
1	54	FREC_01	Combination	Max	-30024.99	224.61	0.09	468.09	1.49	9980.27	1-57	0
1	55	FREC_01	Combination	Max	-29961.97	377.44	0.09	443.55	1.42	9981.82	1-58	0
1	56	FREC_01	Combination	Max	-29898.84	531.03	0.09	419.00	1.34	9826.96	1-59	0
1	57	FREC_01	Combination	Max	-29835.60	685.37	0.09	394.45	1.27	9513.55	1-60	0
1	58	FREC_01	Combination	Max	-29708.79	762.63	0.09	369.91	1.20	9048.58	1-61	0
1	59	FREC_01	Combination	Max	-29645.23	918.72	0.09	345.36	1.12	8427.59	1-62	0
1	60	FREC_01	Combination	Max	-29581.56	1075.46	0.09	320.81	1.05	7641.99	1-63	0
1	61	FREC_01	Combination	Max	-29453.85	1156.36	0.09	296.26	0.98	6683.12	1-64	0
1	62	FREC_01	Combination	Max	-29389.82	1314.63	0.09	271.72	0.90	5578.09	1-65	0
1	63	FREC_01	Combination	Max	-29325.68	1473.47	0.09	247.17	0.83	4303.45	1-66	0
1	64	FREC_01	Combination	Max	-29261.44	1632.87	0.09	222.62	0.75	2857.83	1-67	0
1	65	FREC_01	Combination	Max	-29132.65	1718.04	0.09	198.08	0.68	1229.13	1-68	0
1	66	FREC_01	Combination	Max	-29068.10	1878.79	0.09	177.50	0.61	-548.38	1-69	0
1	67	FREC_01	Combination	Max	-29003.46	2040.01	0.09	154.28	0.53	-1404.80	1-70	0
1	67.5	FREC_01	Combination	Max	-28938.71	2126.99	0.09	158.06	0.50	-478.28	1-71	0
1	68.5	FREC_01	Combination	Max	0.00	-158.31	0.00	562.50	0.00	-39.58	1-72	0
1	0	FREC_01	Combination	Min	0.00	0.00	0.00	0.00	0.00	0.00	1-1	0
1	0.5	FREC_01	Combination	Min	-28954.63	-2492.36	-0.09	-156.26	-0.06	-2961.68	1-2	0
1	1.5	FREC_01	Combination	Min	-29019.38	-2206.13	-0.09	-157.16	-0.24	-3772.30	1-3	0
1	2	FREC_01	Combination	Min	-29084.02	-2119.49	-0.09	-153.43	-0.38	-4378.40	1-4	0
1	3	FREC_01	Combination	Min	-29148.57	-1958.60	-0.09	-173.85	-0.65	-3442.73	1-5	0
1	4	FREC_01	Combination	Min	-29277.36	-1873.27	-0.09	-193.58	-0.91	-2740.61	1-6	0
1	5	FREC_01	Combination	Min	-29341.60	-1713.67	-0.09	-217.77	-1.18	-2078.72	1-7	0
1	6	FREC_01	Combination	Min	-29405.74	-1554.58	-0.09	-242.31	-1.45	-1511.30	1-8	0
1	7	FREC_01	Combination	Min	-29469.77	-1396.04	-0.09	-266.86	-1.72	-1051.74	1-9	0
1	8	FREC_01	Combination	Min	-29597.47	-1314.83	-0.09	-291.41	-1.99	-746.17	1-10	0
1	9	FREC_01	Combination	Min	-29661.15	-1157.75	-0.09	-315.95	-2.26	-471.46	1-11	0
1	10	FREC_01	Combination	Min	-29724.71	-1001.29	-0.09	-340.50	-2.53	-296.48	1-12	0
1	11	FREC_01	Combination	Min	-29851.52	-923.61	-0.09	-365.05	-2.79	-291.97	1-13	0
1	12	FREC_01	Combination	Min	-29914.76	-768.83	-0.09	-389.60	-3.06	-298.87	1-14	0
1	13	FREC_01	Combination	Min	-29977.89	-614.75	-0.09	-414.14	-3.33	-403.38	1-15	0
1	14	FREC_01	Combination	Min	-30040.91	-461.41	-0.09	-438.69	-3.60	-604.91	1-16	0
1	15	FREC_01	Combination	Min	-30160.48	-388.65	-0.09	-463.24	-3.87	-968.99	1-17	0
1	16	FREC_01	Combination	Min	-30202.53	-324.93	-0.09	-487.78	-4.14	-1348.35	1-18	0
1	17	FREC_01	Combination	Min	-30238.74	-262.05	-0.09	-512.33	-4.41	-1708.28	1-19	0
1	18	FREC_01	Combination	Min	-30173.22	-373.77	-0.09	-536.88	-4.68	-2070.70	1-20	0
1	19	FREC_01	Combination	Min	-30090.94	-324.78	-0.09	-561.43	-4.94	-2291.15	1-21	0
1	20	FREC_01	Combination	Min	-30007.92	-275.40	-0.09	-585.97	-5.21	-2501.25	1-22	0
1	21	FREC_01	Combination	Min	-29924.18	-225.62	-0.09	-610.52	-5.48	-2702.82	1-23	0
1	22	FREC_01	Combination	Min	-29754.55	-336.79	-0.09	-635.07	-5.75	-2901.20	1-24	0
1	23	FREC_01	Combination	Min	-29668.52	-285.67	-0.09	-659.61	-6.02	-3052.47	1-25	0
1	24	FREC_01	Combination	Min	-29581.78	-234.21	-0.09	-684.16	-6.29	-3200.44	1-26	0
1	25	FREC_01	Combination	Min	-29406.30	-339.97	-0.09	-708.71	-6.56	-3378.02	1-27	0
1	26	FREC_01	Combination	Min	-29317.58	-286.81	-0.09	-733.25	-6.82	-3482.17	1-28	0
1	27	FREC_01	Combination	Min	-29228.22	-233.36	-0.09	-757.80	-7.09	-3604.80	1-29	0
1	28	FREC_01	Combination	Min	-29047.64	-332.86	-0.09	-782.35	-7.36	-3780.54	1-30	0
1	29	FREC_01	Combination	Min	-28956.43	-277.77	-0.09	-806.90	-7.63	-3888.83	1-31	0
1	30	FREC_01	Combination	Min	-28879.56	417.07	-0.09	-831.44	-7.90	-4048.79	1-32	0
1	31	FREC_01	Combination	Min	-28753.91	1112.09	-0.09	-855.99	-8.17	-5175.18	1-33	0
1	32	FREC_01	Combination	Min	-28480.77	2284.04	-0.09	-880.78	-8.44	-6992.34	1-34	0
1	33	FREC_01	Combination	Min	-28333.53	2959.85	-0.09	-906.45	-8.71	-8752.33	1-35	0
1	33.75	FREC_01	Combination	Min	-28178.32	3620.44	-0.09	-934.77	-8.91	-11348.52	1-36	0

ESTRUCTURA E1. ESFUERZOS EN TABLERO PARA TODOS LOS CASOS E HIPOTESIS DE CARGA

Frame	Station	OutputCase	CaseType	StepType	P	V2	V3	T	M2	M3	FrameElem	ElemStation
Text	m	Text	Text	Text	KN	KN	KN	KN-m	KN-m	KN-m	Text	m
1	34.5	FREC_01	Combination	Min	-28178.33	-5030.34	-0.27	-279.81	-9.11	-16546.20	1-37	0
1	35.25	FREC_01	Combination	Min	-28333.53	-4345.60	-0.27	-285.54	-8.90	-11446.95	1-38	0
1	36	FREC_01	Combination	Min	-28480.77	-3655.48	-0.27	-281.80	-8.70	-9895.73	1-39	0
1	37	FREC_01	Combination	Min	-28753.91	-2466.10	-0.27	-295.49	-8.43	-6911.24	1-40	0
1	38	FREC_01	Combination	Min	-28879.56	-1753.69	-0.27	-318.21	-8.16	-5030.12	1-41	0
1	39	FREC_01	Combination	Min	-28956.43	-1041.52	-0.27	-342.40	-7.90	-3998.97	1-42	0
1	40	FREC_01	Combination	Min	-29047.64	-969.15	-0.27	-366.94	-7.63	-3851.69	1-43	0
1	41	FREC_01	Combination	Min	-29228.22	-1051.42	-0.27	-391.49	-7.36	-3794.38	1-44	0
1	42	FREC_01	Combination	Min	-29317.58	-980.79	-0.27	-416.04	-7.09	-3648.03	1-45	0
1	43	FREC_01	Combination	Min	-29406.30	-910.51	-0.27	-440.59	-6.82	-3494.24	1-46	0
1	44	FREC_01	Combination	Min	-29581.78	-999.20	-0.27	-465.13	-6.55	-3448.67	1-47	0
1	45	FREC_01	Combination	Min	-29668.52	-930.72	-0.27	-489.68	-6.28	-3262.22	1-48	0
1	46	FREC_01	Combination	Min	-29754.55	-862.63	-0.27	-514.23	-6.02	-3082.49	1-49	0
1	47	FREC_01	Combination	Min	-29924.18	-956.88	-0.27	-538.77	-5.75	-3018.59	1-50	0
1	48	FREC_01	Combination	Min	-30007.92	-890.25	-0.27	-563.32	-5.48	-2788.21	1-51	0
1	49	FREC_01	Combination	Min	-30090.94	-824.05	-0.27	-587.87	-5.21	-2548.27	1-52	0
1	50	FREC_01	Combination	Min	-30173.23	-758.30	-0.27	-612.42	-4.94	-2300.96	1-53	0
1	51	FREC_01	Combination	Min	-30238.74	-861.28	-0.27	-636.96	-4.67	-2088.89	1-54	0
1	52	FREC_01	Combination	Min	-30202.54	-797.54	-0.27	-661.51	-4.40	-1697.06	1-55	0
1	53	FREC_01	Combination	Min	-30160.49	-733.02	-0.27	-686.06	-4.14	-1293.44	1-56	0
1	54	FREC_01	Combination	Min	-30040.91	-665.57	-0.27	-710.60	-3.87	-896.53	1-57	0
1	55	FREC_01	Combination	Min	-29977.89	-527.33	-0.27	-735.15	-3.60	-582.02	1-58	0
1	56	FREC_01	Combination	Min	-29914.76	-388.41	-0.27	-759.70	-3.33	-364.18	1-59	0
1	57	FREC_01	Combination	Min	-29851.52	-248.83	-0.27	-784.25	-3.06	-243.62	1-60	0
1	58	FREC_01	Combination	Min	-29724.71	-186.41	-0.27	-808.79	-2.79	-211.91	1-61	0
1	59	FREC_01	Combination	Min	-29661.15	-45.26	-0.27	-833.34	-2.53	-272.21	1-62	0
1	60	FREC_01	Combination	Min	-29597.48	96.46	-0.27	-857.89	-2.26	-431.90	1-63	0
1	61	FREC_01	Combination	Min	-29469.77	162.25	-0.27	-882.43	-1.99	-698.57	1-64	0
1	62	FREC_01	Combination	Min	-29405.74	305.33	-0.27	-906.98	-1.72	-1044.13	1-65	0
1	63	FREC_01	Combination	Min	-29341.60	448.89	-0.27	-931.53	-1.45	-1491.19	1-66	0
1	64	FREC_01	Combination	Min	-29277.36	592.92	-0.27	-956.08	-1.18	-2048.39	1-67	0
1	65	FREC_01	Combination	Min	-29148.57	648.43	-0.27	-980.62	-0.91	-2708.21	1-68	0
1	66	FREC_01	Combination	Min	-29084.03	766.12	-0.27	-1005.70	-0.65	-3444.88	1-69	0
1	67	FREC_01	Combination	Min	-29019.38	884.16	-0.27	-1030.42	-0.38	-3193.13	1-70	0
1	67.5	FREC_01	Combination	Min	-28954.63	935.77	-0.27	-1058.74	-0.24	-1712.62	1-71	0
1	68.5	FREC_01	Combination	Min	0.00	-541.21	0.00	-75.00	0.00	-154.43	1-72	0
1	0	CARACT_01	Combination	Max	0.00	0.00	0.00	0.00	0.00	0.00	1-1	0
1	0.5	CARACT_01	Combination	Max	-28746.18	-1159.14	105.28	1463.28	3.15	-2594.24	1-2	0
1	1.5	CARACT_01	Combination	Max	-28818.85	-916.22	101.51	1425.66	-99.80	-1702.19	1-3	0
1	2	CARACT_01	Combination	Max	-28887.45	-864.96	99.62	1384.63	-149.85	-1501.72	1-4	0
1	3	CARACT_01	Combination	Max	-28959.92	-747.27	95.85	1351.16	-247.12	957.53	1-5	0
1	4	CARACT_01	Combination	Max	-29096.63	-705.02	92.07	1317.58	-340.62	3184.96	1-6	0
1	5	CARACT_01	Combination	Max	-29168.79	-577.88	88.30	1284.79	-430.34	5268.87	1-7	0
1	6	CARACT_01	Combination	Max	-29240.85	-425.05	84.52	1252.06	-516.29	7139.15	1-8	0
1	7	CARACT_01	Combination	Max	-29312.80	-272.70	80.75	1219.33	-598.47	8797.22	1-9	0
1	8	CARACT_01	Combination	Max	-29448.43	-197.66	76.98	1186.60	-676.87	10189.89	1-10	0
1	9	CARACT_01	Combination	Max	-29520.02	-46.70	73.20	1153.87	-751.50	11443.42	1-11	0
1	10	CARACT_01	Combination	Max	-29591.50	103.65	69.43	1121.14	-822.35	12490.19	1-12	0
1	11	CARACT_01	Combination	Max	-29726.23	175.23	65.65	1088.41	-889.43	13260.88	1-13	0
1	12	CARACT_01	Combination	Max	-29797.39	323.92	61.88	1055.68	-952.74	13916.12	1-14	0
1	13	CARACT_01	Combination	Max	-29868.44	471.89	58.11	1022.95	-1012.27	14371.44	1-15	0
1	14	CARACT_01	Combination	Max	-29939.38	619.12	54.33	990.22	-1068.03	14629.33	1-16	0
1	15	CARACT_01	Combination	Max	-30066.87	685.72	50.56	957.49	-1120.01	14626.27	1-17	0
1	16	CARACT_01	Combination	Max	-30116.84	767.62	46.78	924.76	-1168.22	14511.72	1-18	0
1	17	CARACT_01	Combination	Max	-30160.97	863.77	43.01	892.03	-1212.66	14344.19	1-19	0
1	18	CARACT_01	Combination	Max	-30103.37	793.10	39.24	859.30	-1253.32	14081.60	1-20	0
1	19	CARACT_01	Combination	Max	-30029.01	891.04	35.46	826.57	-1290.21	13869.30	1-21	0
1	20	CARACT_01	Combination	Max	-29953.91	989.30	31.69	793.84	-1323.32	13580.32	1-22	0
1	21	CARACT_01	Combination	Max	-29878.09	1087.86	27.91	761.11	-1352.66	13215.72	1-23	0
1	22	CARACT_01	Combination	Max	-29716.38	1025.39	24.14	728.38	-1378.23	12771.13	1-24	0
1	23	CARACT_01	Combination	Max	-29638.27	1125.10	20.37	695.66	-1400.02	12294.65	1-25	0
1	24	CARACT_01	Combination	Max	-29559.45	1225.04	16.59	662.93	-1418.04	11745.76	1-26	0
1	25	CARACT_01	Combination	Max	-29391.89	1167.63	12.82	630.20	-1432.28	11100.04	1-27	0
1	26	CARACT_01	Combination	Max	-29311.09	1269.01	9.04	597.47	-1442.75	10444.14	1-28	0
1	27	CARACT_01	Combination	Max	-29229.65	1370.54	5.27	564.74	-1449.45	9719.91	1-29	0
1	28	CARACT_01	Combination	Max	-29049.20	1318.97	1.50	532.01	-1452.37	8878.07	1-30	0
1	29	CARACT_01	Combination	Max	-28950.08	1421.82	-2.28	499.28	-1451.52	8068.75	1-31	0
1	30	CARACT_01	Combination	Max	-28865.28	2164.25	-6.05	466.55	-1446.89	7139.15	1-32	0
1	31	CARACT_01	Combination	Max	-28731.71	2906.69	-9.83	433.82	-1438.49	5384.52	1-33	0
1	32	CARACT_01	Combination	Max	-28450.65	4125.85	-13.60	403.53	-1426.32	2976.51	1-34	0
1	33	CARACT_01	Combination	Max	-28295.49	4853.57	-17.38	381.41	-1410.37	586.60	1-35	0
1	33.75	CARACT_01	Combination	Max	-28134.35	5561.63	-20.21	386.45	-1395.94	-2494.04	1-36	0
1	34.5	CARACT_01	Combination	Max	-28128.41	-3828.92	23.51	1283.69	-1379.38	-5848.23	1-37	0
1	35.25	CARACT_01	Combination	Max	-28289.55	-3168.33	20.68	1250.01	-1395.96	-2600.85	1-38	0
1	36	CARACT_01	Combination	Max	-28442.73	-2503.26	17.85	1212.07	-1410.40	-566.60	1-39	0
1	37	CARACT_01	Combination	Max	-28723.79	-1334.49	14.08	1177.41	-1426.37	3035.63	1-40	0
1	38	CARACT_01	Combination	Max	-28857.36	-636.45	10.30	1144.36	-1438.54	5512.10	1-41	0
1	39	CARACT_01	Combination	Max	-28942.15	61.72	6.53	1111.56	-1446.94	7167.70	1-42	0
1	40	CARACT_01	Combination	Max	-29041.28	120.47	2.75	1078.83	-1451.57	8067.46	1-43	0
1	41	CARACT_01	Combination	Max	-29229.78	24.96	-1.02	1046.10	-1452.42	8835.31	1-44	0
1	42	CARACT_01	Combination	Max	-29319.01	82.71	-4.79	1013.38	-1449.49	9654.88	1-45	0

ESTRUCTURA E1. ESFUERZOS EN TABLERO PARA TODOS LOS CASOS E HIPOTESIS DE CARGA

Frame	Station	OutputCase	CaseType	StepType	P	V2	V3	T	M2	M3	FrameElem	ElemStation
Text	m	Text	Text	Text	KN	KN	KN	KN-m	KN-m	KN-m	Text	m
1	43	CARACT_01	Combination	Max	-29399.81	140.48	-8.57	980.65	-1442.79	10410.99	1-46	0
1	44	CARACT_01	Combination	Max	-29567.37	39.62	-12.34	947.92	-1432.32	11001.61	1-47	0
1	45	CARACT_01	Combination	Max	-29646.19	96.26	-16.12	915.19	-1418.08	11656.05	1-48	0
1	46	CARACT_01	Combination	Max	-29724.30	152.84	-19.89	882.46	-1400.06	12241.06	1-49	0
1	47	CARACT_01	Combination	Max	-29886.01	47.40	-23.66	849.73	-1378.26	12635.05	1-50	0
1	48	CARACT_01	Combination	Max	-29961.83	103.16	-27.44	817.00	-1352.70	13113.01	1-51	0
1	49	CARACT_01	Combination	Max	-30036.93	158.78	-31.21	784.27	-1323.36	13517.81	1-52	0
1	50	CARACT_01	Combination	Max	-30111.29	214.24	-34.99	751.54	-1290.24	13848.25	1-53	0
1	51	CARACT_01	Combination	Max	-30168.89	101.25	-38.76	718.81	-1253.35	14062.86	1-54	0
1	52	CARACT_01	Combination	Max	-30124.76	175.15	-42.53	686.08	-1212.69	14350.91	1-55	0
1	53	CARACT_01	Combination	Max	-30074.79	269.70	-46.31	653.35	-1168.25	14568.40	1-56	0
1	54	CARACT_01	Combination	Max	-29947.30	373.48	-50.08	620.62	-1120.04	14705.05	1-57	0
1	55	CARACT_01	Combination	Max	-29876.36	558.03	-53.86	587.89	-1068.05	14663.43	1-58	0
1	56	CARACT_01	Combination	Max	-29805.31	743.50	-57.63	555.16	-1012.29	14427.06	1-59	0
1	57	CARACT_01	Combination	Max	-29734.15	929.84	-61.40	522.43	-952.76	13993.28	1-60	0
1	58	CARACT_01	Combination	Max	-29599.42	1039.24	-65.18	489.70	-889.45	13368.61	1-61	0
1	59	CARACT_01	Combination	Max	-29527.94	1227.57	-68.95	456.97	-822.37	12548.14	1-62	0
1	60	CARACT_01	Combination	Max	-29456.34	1416.66	-72.73	424.24	-751.51	11522.90	1-63	0
1	61	CARACT_01	Combination	Max	-29320.72	1530.01	-76.50	391.51	-676.88	10283.84	1-64	0
1	62	CARACT_01	Combination	Max	-29248.77	1720.82	-80.27	358.78	-598.48	8857.79	1-65	0
1	63	CARACT_01	Combination	Max	-29176.71	1912.28	-84.05	326.05	-516.30	7220.98	1-66	0
1	64	CARACT_01	Combination	Max	-29104.55	2104.36	-87.82	293.32	-430.35	5371.81	1-67	0
1	65	CARACT_01	Combination	Max	-28967.84	2222.27	-91.60	260.60	-340.63	3297.98	1-68	0
1	66	CARACT_01	Combination	Max	-28895.37	2415.81	-95.37	233.16	-247.13	1033.58	1-69	0
1	67	CARACT_01	Combination	Max	-28822.81	2609.85	-99.14	198.45	-149.85	-358.25	1-70	0
1	67.5	CARACT_01	Combination	Max	-28754.10	2717.83	-101.03	196.49	-99.80	271.15	1-71	0
1	68.5	CARACT_01	Combination	Max	3.96	-158.31	1.89	750.00	0.47	-39.58	1-72	0
1	0	CARACT_01	Combination	Min	0.00	0.00	0.00	0.00	0.00	0.00	1-1	0
1	0.5	CARACT_01	Combination	Min	-29198.06	-3117.89	104.81	-194.06	2.49	-3238.64	1-2	0
1	1.5	CARACT_01	Combination	Min	-29254.89	-2798.79	101.03	-202.26	-100.79	-4114.88	1-3	0
1	2	CARACT_01	Combination	Min	-29315.57	-2691.15	99.15	-201.04	-151.07	-4748.34	1-4	0
1	3	CARACT_01	Combination	Min	-29372.20	-2497.42	95.37	-228.26	-248.80	-3874.57	1-5	0
1	4	CARACT_01	Combination	Min	-29493.07	-2379.29	91.60	-254.57	-342.75	-3242.45	1-6	0
1	5	CARACT_01	Combination	Min	-29549.39	-2186.94	87.82	-286.81	-432.93	-2650.55	1-7	0
1	6	CARACT_01	Combination	Min	-29605.60	-1995.16	84.05	-319.54	-519.34	-2174.13	1-8	0
1	7	CARACT_01	Combination	Min	-29661.72	-1803.99	80.28	-352.27	-601.98	-1790.56	1-9	0
1	8	CARACT_01	Combination	Min	-29781.50	-1690.23	76.50	-385.00	-680.84	-1563.00	1-10	0
1	9	CARACT_01	Combination	Min	-29837.26	-1500.68	72.73	-417.73	-755.92	-1366.28	1-11	0
1	10	CARACT_01	Combination	Min	-29892.90	-1311.84	68.95	-450.46	-827.24	-1269.29	1-12	0
1	11	CARACT_01	Combination	Min	-30011.79	-1201.90	65.18	-483.19	-894.77	-1341.78	1-13	0
1	12	CARACT_01	Combination	Min	-30067.11	-1014.96	61.41	-515.92	-958.54	-1427.68	1-14	0
1	13	CARACT_01	Combination	Min	-30122.32	-828.85	57.63	-548.65	-1018.53	-1610.19	1-15	0
1	14	CARACT_01	Combination	Min	-30177.42	-643.61	53.86	-581.38	-1074.74	-1889.71	1-16	0
1	15	CARACT_01	Combination	Min	-30289.07	-539.09	50.08	-614.11	-1127.19	-2331.78	1-17	0
1	16	CARACT_01	Combination	Min	-30323.20	-443.77	46.31	-646.84	-1175.85	-2788.14	1-18	0
1	17	CARACT_01	Combination	Min	-30351.49	-349.44	42.54	-679.57	-1220.75	-3227.06	1-19	0
1	18	CARACT_01	Combination	Min	-30278.05	-441.65	38.76	-712.30	-1261.87	-3667.49	1-20	0
1	19	CARACT_01	Combination	Min	-30187.85	-385.27	34.99	-745.03	-1299.22	-3968.93	1-21	0
1	20	CARACT_01	Combination	Min	-30096.91	-328.69	31.21	-777.76	-1332.79	-4254.03	1-22	0
1	21	CARACT_01	Combination	Min	-30005.25	-271.92	27.44	-810.49	-1362.59	-4533.59	1-23	0
1	22	CARACT_01	Combination	Min	-29827.70	-376.29	23.67	-843.22	-1388.61	-4809.97	1-24	0
1	23	CARACT_01	Combination	Min	-29733.75	-318.61	19.89	-875.94	-1410.86	-5039.23	1-25	0
1	24	CARACT_01	Combination	Min	-29639.09	-260.81	16.12	-908.67	-1429.34	-5268.20	1-26	0
1	25	CARACT_01	Combination	Min	-29455.69	-360.47	12.34	-941.40	-1444.04	-5515.77	1-27	0
1	26	CARACT_01	Combination	Min	-29359.05	-301.46	8.57	-974.13	-1454.97	-5707.92	1-28	0
1	27	CARACT_01	Combination	Min	-29261.77	-242.42	4.80	-1006.86	-1462.12	-5908.54	1-29	0
1	28	CARACT_01	Combination	Min	-29081.06	-336.60	1.02	-1039.59	-1465.50	-6158.70	1-30	0
1	29	CARACT_01	Combination	Min	-28997.77	-276.46	-2.75	-1072.32	-1465.11	-6351.28	1-31	0
1	30	CARACT_01	Combination	Min	-28928.82	423.14	-6.53	-1105.05	-1460.94	-6611.54	1-32	0
1	31	CARACT_01	Combination	Min	-28811.09	1122.62	-10.30	-1137.78	-1453.00	-8101.59	1-33	0
1	32	CARACT_01	Combination	Min	-28545.87	2298.73	-14.07	-1170.83	-1441.28	-10399.01	1-34	0
1	33	CARACT_01	Combination	Min	-28406.54	2976.74	-17.85	-1205.73	-1425.79	-12653.27	1-35	0
1	33.75	CARACT_01	Combination	Min	-28257.28	3637.33	-20.68	-1243.49	-1411.70	-15635.23	1-36	0
1	34.5	CARACT_01	Combination	Min	-28263.23	-5799.00	23.04	-375.91	-1395.48	-19241.36	1-37	0
1	35.25	CARACT_01	Combination	Min	-28412.49	-5092.39	20.21	-383.56	-1411.70	-15733.10	1-38	0
1	36	CARACT_01	Combination	Min	-28553.79	-4380.09	17.38	-379.25	-1425.79	-13800.78	1-39	0
1	37	CARACT_01	Combination	Min	-28819.01	-3162.32	13.60	-397.50	-1441.28	-10817.32	1-40	0
1	38	CARACT_01	Combination	Min	-28936.74	-2421.22	9.83	-427.79	-1452.99	-7964.93	1-41	0
1	39	CARACT_01	Combination	Min	-29005.69	-1680.07	6.05	-460.04	-1460.93	-6548.09	1-42	0
1	40	CARACT_01	Combination	Min	-29088.98	-1578.46	2.28	-492.77	-1465.10	-6331.51	1-43	0
1	41	CARACT_01	Combination	Min	-29261.64	-1631.24	-1.50	-525.49	-1465.50	-6172.89	1-44	0
1	42	CARACT_01	Combination	Min	-29351.13	-1530.86	-5.27	-558.22	-1462.12	-5944.11	1-45	0
1	43	CARACT_01	Combination	Min	-29447.77	-1430.58	-9.04	-590.95	-1454.96	-5716.31	1-46	0
1	44	CARACT_01	Combination	Min	-29631.17	-1489.05	-12.82	-623.68	-1444.03	-5539.73	1-47	0
1	45	CARACT_01	Combination	Min	-29725.83	-1390.12	-16.59	-656.41	-1429.33	-5331.27	1-48	0
1	46	CARACT_01	Combination	Min	-29819.78	-1291.38	-20.37	-689.14	-1410.86	-5078.53	1-49	0
1	47	CARACT_01	Combination	Min	-29997.33	-1354.77	-24.14	-721.87	-1388.61	-4923.62	1-50	0
1	48	CARACT_01	Combination	Min	-30088.99	-1257.08	-27.91	-754.60	-1362.58	-4618.23	1-51	0
1	49	CARACT_01	Combination	Min	-30179.93	-1159.65	-31.69	-787.33	-1332.78	-4302.28	1-52	0
1	50	CARACT_01	Combination	Min	-30270.14	-1062.49	-35.46	-820.06	-1299.21	-3978.96	1-53	0
1	51	CARACT_01	Combination	Min	-30343.57	-1133.90	-39.24	-852.79	-1261.87	-3672.88	1-54	0

ESTRUCTURA E1. ESFUERZOS EN TABLERO PARA TODOS LOS CASOS E HIPOTESIS DE CARGA

Frame	Station	OutputCase	CaseType	StepType	P	V2	V3	T	M2	M3	FrameElem	ElemStation
Text	m	Text	Text	Text	KN	KN	KN	KN-m	KN-m	KN-m	Text	m
1	52	CARACT_01	Combination	Min	-30315.29	-1038.43	-43.01	-885.52	-1220.75	-3215.04	1-55	0
1	53	CARACT_01	Combination	Min	-30281.16	-942.04	-46.78	-918.25	-1175.85	-2734.41	1-56	0
1	54	CARACT_01	Combination	Min	-30169.50	-851.67	-50.56	-950.98	-1127.18	-2251.48	1-57	0
1	55	CARACT_01	Combination	Min	-30114.40	-705.00	-54.33	-983.71	-1074.74	-1868.96	1-58	0
1	56	CARACT_01	Combination	Min	-30059.19	-557.53	-58.11	-1016.44	-1018.53	-1571.11	1-59	0
1	57	CARACT_01	Combination	Min	-30003.87	-409.30	-61.88	-1049.17	-958.54	-1371.54	1-60	0
1	58	CARACT_01	Combination	Min	-29884.98	-338.13	-65.65	-1081.90	-894.77	-1261.83	1-61	0
1	59	CARACT_01	Combination	Min	-29829.34	-188.14	-69.43	-1114.63	-827.23	-1243.11	1-62	0
1	60	CARACT_01	Combination	Min	-29773.59	-37.50	-73.20	-1147.36	-755.92	-1326.79	1-63	0
1	61	CARACT_01	Combination	Min	-29653.80	37.27	-76.98	-1180.09	-680.84	-1511.45	1-64	0
1	62	CARACT_01	Combination	Min	-29597.69	189.39	-80.75	-1212.82	-601.98	-1781.00	1-65	0
1	63	CARACT_01	Combination	Min	-29541.47	342.04	-84.52	-1245.55	-519.34	-2152.05	1-66	0
1	64	CARACT_01	Combination	Min	-29485.15	495.19	-88.30	-1278.27	-432.93	-2621.24	1-67	0
1	65	CARACT_01	Combination	Min	-29364.28	555.12	-92.07	-1311.00	-342.75	-3208.05	1-68	0
1	66	CARACT_01	Combination	Min	-29307.66	672.81	-95.85	-1344.44	-248.80	-3872.71	1-69	0
1	67	CARACT_01	Combination	Min	-29250.93	790.85	-99.62	-1381.15	-151.07	-3538.47	1-70	0
1	67.5	CARACT_01	Combination	Min	-29190.14	842.46	-101.51	-1425.91	-100.79	-2010.53	1-71	0
1	68.5	CARACT_01	Combination	Min	-3.96	-678.06	1.89	-100.00	0.47	-195.01	1-72	0
1	0	ELU_01	Combination	Max	0.00	0.00	0.00	0.00	0.00	0.00	1-1	0
1	0.5	ELU_01	Combination	Max	-31851.67	-1834.01	158.49	3937.06	5.57	-2818.84	1-2	0
1	1.5	ELU_01	Combination	Max	-31934.31	-1488.22	152.83	3795.35	-149.14	-843.79	1-3	0
1	2	ELU_01	Combination	Max	-32011.48	-1401.33	150.00	3789.70	-224.20	-95.89	1-4	0
1	3	ELU_01	Combination	Max	-32093.89	-1222.63	144.34	3657.97	-370.01	3537.17	1-5	0
1	4	ELU_01	Combination	Max	-32247.68	-1125.73	138.68	3528.40	-510.12	6801.40	1-6	0
1	5	ELU_01	Combination	Max	-32329.75	-930.02	133.02	3402.89	-644.54	9825.35	1-7	0
1	6	ELU_01	Combination	Max	-32411.71	-697.47	127.36	3280.58	-773.30	12539.64	1-8	0
1	7	ELU_01	Combination	Max	-32493.55	-463.50	121.70	3161.28	-896.39	14946.08	1-9	0
1	8	ELU_01	Combination	Max	-32646.14	-313.46	116.04	3044.98	-1013.81	16985.83	1-10	0
1	9	ELU_01	Combination	Max	-32727.57	-77.14	110.37	2931.70	-1125.57	18799.46	1-11	0
1	10	ELU_01	Combination	Max	-32808.89	160.42	104.71	2821.42	-1231.67	20312.19	1-12	0
1	11	ELU_01	Combination	Max	-32960.48	312.32	99.05	2714.14	-1332.10	21447.35	1-13	0
1	12	ELU_01	Combination	Max	-33041.44	551.76	93.39	2609.88	-1426.88	22383.84	1-14	0
1	13	ELU_01	Combination	Max	-33122.28	792.21	87.73	2508.62	-1515.99	23028.24	1-15	0
1	14	ELU_01	Combination	Max	-33203.00	1033.61	82.07	2410.36	-1599.44	23383.79	1-16	0
1	15	ELU_01	Combination	Max	-33346.55	1187.18	76.41	2315.12	-1677.22	23380.45	1-17	0
1	16	ELU_01	Combination	Max	-33403.96	1332.38	70.75	2222.88	-1749.35	23184.83	1-18	0
1	17	ELU_01	Combination	Max	-33454.88	1478.25	65.09	2133.65	-1815.82	22871.96	1-19	0
1	18	ELU_01	Combination	Max	-33392.78	1440.38	59.43	2047.42	-1876.62	22386.91	1-20	0
1	19	ELU_01	Combination	Max	-33312.04	1591.42	53.76	1964.20	-1931.76	21890.18	1-21	0
1	20	ELU_01	Combination	Max	-33230.49	1744.35	48.10	1883.99	-1981.24	21241.35	1-22	0
1	21	ELU_01	Combination	Max	-33148.14	1899.07	42.44	1806.79	-2025.06	20442.26	1-23	0
1	22	ELU_01	Combination	Max	-32970.35	1876.30	36.78	1732.59	-2063.22	19488.78	1-24	0
1	23	ELU_01	Combination	Max	-32885.45	2035.07	31.12	1661.40	-2095.72	18435.11	1-25	0
1	24	ELU_01	Combination	Max	-32799.77	2195.41	25.46	1593.22	-2122.56	17237.02	1-26	0
1	25	ELU_01	Combination	Max	-32615.48	2182.17	19.80	1528.05	-2143.73	15868.20	1-27	0
1	26	ELU_01	Combination	Max	-32527.60	2346.53	14.14	1465.88	-2159.25	14425.78	1-28	0
1	27	ELU_01	Combination	Max	-32439.00	2512.19	8.48	1406.72	-2169.10	12846.09	1-29	0
1	28	ELU_01	Combination	Max	-32238.54	2508.78	2.82	1350.56	-2173.29	11087.67	1-30	0
1	29	ELU_01	Combination	Max	-32126.50	2677.94	-2.85	1297.41	-2171.82	9459.55	1-31	0
1	30	ELU_01	Combination	Max	-32030.39	3558.65	-8.51	1247.27	-2164.69	7818.63	1-32	0
1	31	ELU_01	Combination	Max	-31880.09	4440.21	-14.17	1200.14	-2151.90	5365.67	1-33	0
1	32	ELU_01	Combination	Max	-31565.91	5904.54	-19.83	1173.76	-2133.45	2277.18	1-34	0
1	33	ELU_01	Combination	Max	-31391.62	6769.63	-25.49	1137.37	-2109.34	-715.25	1-35	0
1	33.75	ELU_01	Combination	Max	-31211.15	7574.32	-29.74	1099.18	-2087.54	-4334.73	1-36	0
1	34.5	ELU_01	Combination	Max	-31203.13	-5098.76	35.46	3130.05	-2062.54	-8192.86	1-37	0
1	35.25	ELU_01	Combination	Max	-31383.59	-4319.74	31.21	3010.62	-2087.52	-4447.09	1-38	0
1	36	ELU_01	Combination	Max	-31555.21	-3527.32	26.97	2986.08	-2109.32	-1982.35	1-39	0
1	37	ELU_01	Combination	Max	-31869.40	-2169.20	21.30	2777.60	-2133.44	2359.71	1-40	0
1	38	ELU_01	Combination	Max	-32019.70	-1339.42	15.64	2667.46	-2151.89	5528.17	1-41	0
1	39	ELU_01	Combination	Max	-32115.81	-508.20	9.98	2560.42	-2164.68	7874.16	1-42	0
1	40	ELU_01	Combination	Max	-32227.84	-386.11	4.32	2456.38	-2171.81	9484.26	1-43	0
1	41	ELU_01	Combination	Max	-32439.18	-434.04	-1.34	2355.35	-2173.28	11067.92	1-44	0
1	42	ELU_01	Combination	Max	-32538.29	-310.24	-7.00	2257.33	-2169.09	12802.52	1-45	0
1	43	ELU_01	Combination	Max	-32626.17	-184.94	-12.66	2162.31	-2159.24	14417.90	1-46	0
1	44	ELU_01	Combination	Max	-32810.46	-234.35	-18.32	2070.30	-2143.72	15787.39	1-47	0
1	45	ELU_01	Combination	Max	-32896.14	-107.18	-23.98	1981.30	-2122.55	17164.92	1-48	0
1	46	ELU_01	Combination	Max	-32981.04	21.54	-29.65	1895.30	-2095.71	18401.57	1-49	0
1	47	ELU_01	Combination	Max	-33158.83	-28.09	-35.31	1812.32	-2063.21	19361.45	1-50	0
1	48	ELU_01	Combination	Max	-33241.18	103.09	-40.97	1732.33	-2025.06	20349.32	1-51	0
1	49	ELU_01	Combination	Max	-33322.73	235.85	-46.63	1655.36	-1981.24	21189.89	1-52	0
1	50	ELU_01	Combination	Max	-33403.47	370.21	-52.29	1581.39	-1931.75	21881.12	1-53	0
1	51	ELU_01	Combination	Max	-33465.57	319.22	-57.95	1510.43	-1876.61	22376.28	1-54	0
1	52	ELU_01	Combination	Max	-33414.65	455.60	-63.61	1442.48	-1815.81	22885.05	1-55	0
1	53	ELU_01	Combination	Max	-33357.24	595.02	-69.27	1377.54	-1749.34	23246.42	1-56	0
1	54	ELU_01	Combination	Max	-33213.69	746.59	-74.93	1315.60	-1677.22	23461.49	1-57	0
1	55	ELU_01	Combination	Max	-33132.97	989.82	-80.59	1256.66	-1599.43	23409.71	1-58	0
1	56	ELU_01	Combination	Max	-33052.13	1236.01	-86.26	1200.74	-1515.98	23072.24	1-59	0
1	57	ELU_01	Combination	Max	-32971.18	1485.13	-91.92	1147.82	-1426.87	22445.63	1-60	0
1	58	ELU_01	Combination	Max	-32819.59	1650.72	-97.58	1097.91	-1332.10	21536.65	1-61	0
1	59	ELU_01	Combination	Max	-32738.27	1906.00	-103.24	1051.01	-1231.66	20339.45	1-62	0
1	60	ELU_01	Combination	Max	-32656.83	2164.14	-108.90	1007.11	-1125.57	18843.66	1-63	0

ESTRUCTURA E1. ESFUERZOS EN TABLERO PARA TODOS LOS CASOS E HIPOTESIS DE CARGA

Frame	Station	OutputCase	CaseType	StepType	P	V2	V3	T	M2	M3	FrameElem	ElemStation
Text	m	Text	Text	Text	KN	KN	KN	KN-m	KN-m	KN-m	Text	m
1	61	ELU_01	Combination	Max	-32504.24	2340.12	-114.56	966.22	-1013.81	17038.92	1-64	0
1	62	ELU_01	Combination	Max	-32422.40	2604.18	-120.22	928.34	-896.38	14954.68	1-65	0
1	63	ELU_01	Combination	Max	-32340.45	2870.98	-125.88	893.46	-773.30	12564.30	1-66	0
1	64	ELU_01	Combination	Max	-32258.38	3140.50	-131.54	861.60	-644.54	9865.76	1-67	0
1	65	ELU_01	Combination	Max	-32104.59	3329.62	-137.20	834.16	-510.11	6845.17	1-68	0
1	66	ELU_01	Combination	Max	-32022.18	3604.81	-142.87	817.65	-370.01	3540.28	1-69	0
1	67	ELU_01	Combination	Max	-31939.65	3882.57	-148.53	794.79	-224.20	1129.20	1-70	0
1	67.5	ELU_01	Combination	Max	-31862.37	3969.85	-151.36	784.30	-149.14	1351.43	1-71	0
1	68.5	ELU_01	Combination	Max	5.35	-213.71	2.83	1058.06	0.71	-53.43	1-72	0
1	0	ELU_01	Combination	Min	0.00	0.00	0.00	0.00	0.00	0.00	1-1	0
1	0.5	ELU_01	Combination	Min	-32465.82	-4499.86	157.02	-805.31	3.50	-3697.27	1-2	0
1	1.5	ELU_01	Combination	Min	-32527.07	-4051.74	151.36	-794.74	-151.53	-4128.47	1-3	0
1	2	ELU_01	Combination	Min	-32593.56	-3964.85	148.53	-800.35	-227.16	-4591.69	1-4	0
1	3	ELU_01	Combination	Min	-32654.58	-3687.48	142.87	-817.60	-374.24	-3177.16	1-5	0
1	4	ELU_01	Combination	Min	-32786.99	-3496.11	137.20	-834.11	-515.69	-2104.69	1-6	0
1	5	ELU_01	Combination	Min	-32847.67	-3224.32	131.54	-861.55	-651.50	-1121.78	1-7	0
1	6	ELU_01	Combination	Min	-32908.25	-2955.19	125.88	-893.42	-781.67	-298.62	1-8	0
1	7	ELU_01	Combination	Min	-32968.70	-2688.77	120.22	-928.29	-906.17	365.49	1-9	0
1	8	ELU_01	Combination	Min	-33099.91	-2510.39	114.56	-966.18	-1025.02	810.37	1-10	0
1	9	ELU_01	Combination	Min	-33159.96	-2249.82	108.90	-1007.07	-1138.21	1175.08	1-11	0
1	10	ELU_01	Combination	Min	-33219.90	-1992.06	103.24	-1050.96	-1245.75	1383.10	1-12	0
1	11	ELU_01	Combination	Min	-33350.10	-1823.97	97.58	-1097.87	-1347.62	1355.81	1-13	0
1	12	ELU_01	Combination	Min	-33409.68	-1572.32	91.92	-1147.78	-1443.83	1269.96	1-14	0
1	13	ELU_01	Combination	Min	-33469.13	-1323.58	86.26	-1200.70	-1534.38	1029.76	1-15	0
1	14	ELU_01	Combination	Min	-33528.46	-1077.76	80.59	-1256.62	-1619.28	635.88	1-16	0
1	15	ELU_01	Combination	Min	-33650.63	-923.60	74.93	-1315.55	-1698.51	15.50	1-17	0
1	16	ELU_01	Combination	Min	-33686.66	-781.56	69.27	-1377.49	-1772.08	-667.75	1-18	0
1	17	ELU_01	Combination	Min	-33716.19	-642.53	63.61	-1442.44	-1839.99	-1375.30	1-19	0
1	18	ELU_01	Combination	Min	-33632.70	-690.87	57.95	-1510.39	-1902.24	-2131.51	1-20	0
1	19	ELU_01	Combination	Min	-33530.58	-553.85	52.29	-1581.35	-1958.83	-2776.96	1-21	0
1	20	ELU_01	Combination	Min	-33427.65	-418.40	46.63	-1655.32	-2009.76	-3458.70	1-22	0
1	21	ELU_01	Combination	Min	-33323.91	-284.54	40.97	-1732.29	-2055.02	-4168.73	1-23	0
1	22	ELU_01	Combination	Min	-33124.74	-331.48	35.31	-1812.27	-2094.63	-4922.22	1-24	0
1	23	ELU_01	Combination	Min	-33018.46	-200.07	29.65	-1895.26	-2128.58	-5676.25	1-25	0
1	24	ELU_01	Combination	Min	-32911.39	-70.20	23.98	-1981.25	-2156.86	-6472.51	1-26	0
1	25	ELU_01	Combination	Min	-32705.72	-116.92	18.32	-2070.26	-2179.49	-7337.99	1-27	0
1	26	ELU_01	Combination	Min	-32596.45	11.08	12.66	-2162.27	-2196.45	-8188.45	1-28	0
1	27	ELU_01	Combination	Min	-32486.48	137.57	7.00	-2257.28	-2207.75	-9084.67	1-29	0
1	28	ELU_01	Combination	Min	-32285.65	92.32	1.34	-2355.30	-2213.39	-10104.32	1-30	0
1	29	ELU_01	Combination	Min	-32195.00	217.08	-4.32	-2456.33	-2213.37	-11257.06	1-31	0
1	30	ELU_01	Combination	Min	-32120.28	1050.96	-9.98	-2560.37	-2207.69	-12710.19	1-32	0
1	31	ELU_01	Combination	Min	-31991.36	1883.38	-15.64	-2667.42	-2196.35	-15234.42	1-33	0
1	32	ELU_01	Combination	Min	-31698.56	3244.12	-21.30	-2871.74	-2179.35	-18628.72	1-34	0
1	33	ELU_01	Combination	Min	-31545.65	4057.44	-26.97	-2987.02	-2156.69	-22135.51	1-35	0
1	33.75	ELU_01	Combination	Min	-31381.22	4844.88	-31.21	-3010.57	-2135.97	-26277.66	1-36	0
1	34.5	ELU_01	Combination	Min	-31389.24	-7903.72	33.98	-1096.98	-2112.08	-31193.89	1-37	0
1	35.25	ELU_01	Combination	Min	-31553.67	-7049.18	29.74	-1099.13	-2135.97	-26390.02	1-38	0
1	36	ELU_01	Combination	Min	-31709.25	-6239.52	25.49	-1138.30	-2156.69	-23407.87	1-39	0
1	37	ELU_01	Combination	Min	-32002.05	-4777.35	19.83	-1156.62	-2179.35	-18545.13	1-40	0
1	38	ELU_01	Combination	Min	-32130.97	-3896.26	14.17	-1200.09	-2196.35	-15071.93	1-41	0
1	39	ELU_01	Combination	Min	-32205.69	-3015.89	8.51	-1247.22	-2207.69	-12694.67	1-42	0
1	40	ELU_01	Combination	Min	-32296.35	-2846.97	2.85	-1297.36	-2213.37	-11232.36	1-43	0
1	41	ELU_01	Combination	Min	-32486.30	-2850.51	-2.82	-1350.51	-2213.39	-10124.08	1-44	0
1	42	ELU_01	Combination	Min	-32585.76	-2684.86	-8.48	-1406.67	-2207.75	-9126.26	1-45	0
1	43	ELU_01	Combination	Min	-32695.03	-2520.40	-14.14	-1465.83	-2196.45	-8151.34	1-46	0
1	44	ELU_01	Combination	Min	-32900.70	-2533.44	-19.80	-1528.00	-2179.49	-7418.80	1-47	0
1	45	ELU_01	Combination	Min	-33007.77	-2372.79	-25.46	-1593.17	-2156.86	-6546.62	1-48	0
1	46	ELU_01	Combination	Min	-33114.05	-2213.60	-31.12	-1661.36	-2128.58	-5711.80	1-49	0
1	47	ELU_01	Combination	Min	-33313.22	-2235.87	-36.78	-1732.55	-2094.63	-5054.56	1-50	0
1	48	ELU_01	Combination	Min	-33416.96	-2080.53	-42.44	-1806.74	-2055.03	-4262.67	1-51	0
1	49	ELU_01	Combination	Min	-33519.89	-1926.90	-48.10	-1883.95	-2009.76	-3507.16	1-52	0
1	50	ELU_01	Combination	Min	-33622.01	-1775.06	-53.76	-1964.16	-1958.83	-2788.03	1-53	0
1	51	ELU_01	Combination	Min	-33705.50	-1812.03	-59.43	-2047.38	-1902.24	-2141.15	1-54	0
1	52	ELU_01	Combination	Min	-33675.96	-1665.18	-65.09	-2133.60	-1839.99	-1361.20	1-55	0
1	53	ELU_01	Combination	Min	-33639.93	-1518.91	-70.75	-2222.83	-1772.08	-606.16	1-56	0
1	54	ELU_01	Combination	Min	-33517.77	-1364.19	-76.41	-2315.07	-1698.51	96.54	1-57	0
1	55	ELU_01	Combination	Min	-33458.44	-1121.55	-82.07	-2410.32	-1619.28	661.79	1-58	0
1	56	ELU_01	Combination	Min	-33398.98	-879.78	-87.73	-2508.57	-1534.38	1073.75	1-59	0
1	57	ELU_01	Combination	Min	-33339.41	-638.95	-93.39	-2609.83	-1443.83	1331.74	1-60	0
1	58	ELU_01	Combination	Min	-33209.20	-485.57	-99.05	-2714.10	-1347.62	1445.10	1-61	0
1	59	ELU_01	Combination	Min	-33149.27	-246.48	-104.71	-2821.37	-1245.75	1410.35	1-62	0
1	60	ELU_01	Combination	Min	-33089.21	-8.54	-110.37	-2931.65	-1138.21	1219.28	1-63	0
1	61	ELU_01	Combination	Min	-32958.01	143.19	-116.04	-3044.94	-1025.02	863.46	1-64	0
1	62	ELU_01	Combination	Min	-32897.55	378.91	-121.70	-3161.24	-906.17	374.08	1-65	0
1	63	ELU_01	Combination	Min	-32836.98	613.27	-127.36	-3280.54	-781.67	-273.96	1-66	0
1	64	ELU_01	Combination	Min	-32776.30	846.19	-133.02	-3402.85	-651.51	-1081.37	1-67	0
1	65	ELU_01	Combination	Min	-32643.89	959.24	-138.68	-3528.36	-515.69	-2060.92	1-68	0
1	66	ELU_01	Combination	Min	-32582.86	1139.97	-144.34	-3657.93	-374.24	-3174.04	1-69	0
1	67	ELU_01	Combination	Min	-32521.73	1319.05	-150.00	-3795.31	-227.16	-3348.11	1-70	0
1	67.5	ELU_01	Combination	Min	-32455.13	1406.33	-152.83	-3805.85	-151.53	-1898.94	1-71	0
1	68.5	ELU_01	Combination	Min	-5.35	-915.37	2.83	-147.66	0.71	-403.56	1-72	0

ESTRUCTURA E1. ESFUERZOS EN TABLERO PARA TODOS LOS CASOS E HIPOTESIS DE CARGA

Frame	Station	OutputCase	CaseType	StepType	P	V2	V3	T	M2	M3	FrameElem	ElemStation
Text	m	Text	Text	Text	KN	KN	KN	KN-m	KN-m	KN-m	Text	m
1	0	ELU_02	Combination	Max	0.00	0.00	0.00	0.00	0.00	0.00	1-1	0
1	0.5	ELU_02	Combination	Max	-31836.33	-865.55	158.49	3937.06	5.57	-2784.19	1-2	0
1	1.5	ELU_02	Combination	Max	-31918.96	-635.13	152.83	3795.35	-149.14	-1725.86	1-3	0
1	2	ELU_02	Combination	Max	-31996.14	-594.37	150.00	3789.70	-224.20	-1392.39	1-4	0
1	3	ELU_02	Combination	Max	-32078.55	-487.46	144.34	3657.97	-370.01	1469.60	1-5	0
1	4	ELU_02	Combination	Max	-32232.34	-462.34	138.68	3528.40	-510.12	4034.55	1-6	0
1	5	ELU_02	Combination	Max	-32314.41	-338.42	133.02	3402.89	-644.54	6431.01	1-7	0
1	6	ELU_02	Combination	Max	-32396.36	-177.66	127.36	3280.58	-773.30	8589.59	1-8	0
1	7	ELU_02	Combination	Max	-32478.20	-15.47	121.70	3161.28	-896.39	10517.11	1-9	0
1	8	ELU_02	Combination	Max	-32630.79	62.79	116.04	3044.98	-1013.81	12139.72	1-10	0
1	9	ELU_02	Combination	Max	-32712.23	227.32	110.37	2931.70	-1125.57	13613.00	1-11	0
1	10	ELU_02	Combination	Max	-32793.55	393.09	104.71	2821.42	-1231.67	14857.16	1-12	0
1	11	ELU_02	Combination	Max	-32945.14	473.21	99.05	2714.14	-1332.10	15795.53	1-13	0
1	12	ELU_02	Combination	Max	-33026.10	640.86	93.39	2609.88	-1426.88	16607.03	1-14	0
1	13	ELU_02	Combination	Max	-33106.93	809.53	87.73	2508.62	-1515.99	17198.21	1-15	0
1	14	ELU_02	Combination	Max	-33187.65	979.14	82.07	2410.36	-1599.44	17572.34	1-16	0
1	15	ELU_02	Combination	Max	-33331.20	1060.93	76.41	2315.12	-1677.22	17659.34	1-17	0
1	16	ELU_02	Combination	Max	-33388.61	1134.34	70.75	2222.88	-1749.35	17625.87	1-18	0
1	17	ELU_02	Combination	Max	-33439.53	1208.43	65.09	2133.65	-1815.82	17546.92	1-19	0
1	18	ELU_02	Combination	Max	-33377.43	1098.77	59.43	2047.42	-1876.62	17367.60	1-20	0
1	19	ELU_02	Combination	Max	-33296.69	1178.03	53.76	1964.20	-1931.76	17248.36	1-21	0
1	20	ELU_02	Combination	Max	-33215.14	1259.17	48.10	1883.99	-1981.24	17048.81	1-22	0
1	21	ELU_02	Combination	Max	-33132.79	1342.11	42.44	1806.79	-2025.06	16770.79	1-23	0
1	22	ELU_02	Combination	Max	-32955.00	1247.55	36.78	1732.59	-2063.22	16410.17	1-24	0
1	23	ELU_02	Combination	Max	-32870.11	1334.54	31.12	1661.40	-2095.72	16021.13	1-25	0
1	24	ELU_02	Combination	Max	-32784.42	1423.09	25.46	1593.22	-2122.56	15559.47	1-26	0
1	25	ELU_02	Combination	Max	-32600.13	1338.07	19.80	1528.05	-2143.73	14998.85	1-27	0
1	26	ELU_02	Combination	Max	-32512.25	1430.65	14.14	1465.88	-2159.25	14436.44	1-28	0
1	27	ELU_02	Combination	Max	-32423.66	1524.52	8.48	1406.72	-2169.10	13808.53	1-29	0
1	28	ELU_02	Combination	Max	-32223.19	1449.32	2.82	1350.56	-2173.29	13073.67	1-30	0
1	29	ELU_02	Combination	Max	-32111.15	1546.70	-2.85	1297.41	-2171.82	12540.90	1-31	0
1	30	ELU_02	Combination	Max	-32015.05	2355.62	-8.51	1247.27	-2164.69	12067.12	1-32	0
1	31	ELU_02	Combination	Max	-31864.74	3165.40	-14.17	1200.14	-2151.90	10853.07	1-33	0
1	32	ELU_02	Combination	Max	-31550.56	4557.94	-19.83	1173.76	-2133.45	9075.28	1-34	0
1	33	ELU_02	Combination	Max	-31376.27	5351.25	-25.49	1137.37	-2109.34	7464.77	1-35	0
1	33.75	ELU_02	Combination	Max	-31195.80	6086.73	-29.74	1099.18	-2087.54	4939.03	1-36	0
1	34.5	ELU_02	Combination	Max	-31187.78	-3541.97	35.46	3130.05	-2062.54	2218.54	1-37	0
1	35.25	ELU_02	Combination	Max	-31368.25	-2832.15	31.21	3010.62	-2087.52	4822.67	1-38	0
1	36	ELU_02	Combination	Max	-31539.87	-2108.93	26.97	2986.08	-2109.32	6198.25	1-39	0
1	37	ELU_02	Combination	Max	-31854.05	-822.60	21.30	2777.60	-2133.44	9157.82	1-40	0
1	38	ELU_02	Combination	Max	-32004.35	-64.61	15.64	2667.46	-2151.89	11015.57	1-41	0
1	39	ELU_02	Combination	Max	-32100.46	694.83	9.98	2560.42	-2164.68	12122.64	1-42	0
1	40	ELU_02	Combination	Max	-32212.50	745.13	4.32	2456.38	-2171.81	12565.60	1-43	0
1	41	ELU_02	Combination	Max	-32423.83	625.41	-1.34	2355.35	-2173.28	13053.91	1-44	0
1	42	ELU_02	Combination	Max	-32522.94	677.43	-7.00	2257.33	-2169.09	13764.95	1-45	0
1	43	ELU_02	Combination	Max	-32610.83	730.95	-12.66	2162.31	-2159.24	14428.55	1-46	0
1	44	ELU_02	Combination	Max	-32795.11	609.75	-18.32	2070.30	-2143.72	14918.05	1-47	0
1	45	ELU_02	Combination	Max	-32880.80	665.14	-23.98	1981.30	-2122.55	15487.37	1-48	0
1	46	ELU_02	Combination	Max	-32965.69	722.07	-29.65	1895.30	-2095.71	15987.59	1-49	0
1	47	ELU_02	Combination	Max	-33143.48	600.66	-35.31	1812.32	-2063.21	16282.83	1-50	0
1	48	ELU_02	Combination	Max	-33225.83	660.05	-40.97	1732.33	-2025.06	16677.85	1-51	0
1	49	ELU_02	Combination	Max	-33307.38	721.03	-46.63	1655.36	-1981.24	16997.36	1-52	0
1	50	ELU_02	Combination	Max	-33388.12	783.60	-52.29	1581.39	-1931.75	17239.30	1-53	0
1	51	ELU_02	Combination	Max	-33450.23	660.82	-57.95	1510.43	-1876.61	17356.96	1-54	0
1	52	ELU_02	Combination	Max	-33399.30	725.42	-63.61	1442.48	-1815.81	17560.02	1-55	0
1	53	ELU_02	Combination	Max	-33341.89	793.06	-69.27	1377.54	-1749.34	17687.46	1-56	0
1	54	ELU_02	Combination	Max	-33198.34	872.84	-74.93	1315.60	-1677.22	17740.39	1-57	0
1	55	ELU_02	Combination	Max	-33117.62	1044.28	-80.59	1256.66	-1599.43	17598.25	1-58	0
1	56	ELU_02	Combination	Max	-33036.79	1218.69	-86.26	1200.74	-1515.98	17242.21	1-59	0
1	57	ELU_02	Combination	Max	-32955.83	1396.02	-91.92	1147.82	-1426.87	16668.81	1-60	0
1	58	ELU_02	Combination	Max	-32804.24	1489.83	-97.58	1097.91	-1332.10	15884.83	1-61	0
1	59	ELU_02	Combination	Max	-32722.92	1673.33	-103.24	1051.01	-1231.66	14884.41	1-62	0
1	60	ELU_02	Combination	Max	-32641.48	1859.68	-108.90	1007.11	-1125.57	13657.20	1-63	0
1	61	ELU_02	Combination	Max	-32488.89	1963.87	-114.56	966.22	-1013.81	12192.80	1-64	0
1	62	ELU_02	Combination	Max	-32407.05	2156.14	-120.22	928.34	-896.38	10520.71	1-65	0
1	63	ELU_02	Combination	Max	-32325.10	2351.16	-125.88	893.46	-773.30	8614.25	1-66	0
1	64	ELU_02	Combination	Max	-32243.03	2548.89	-131.54	861.60	-644.54	6471.42	1-67	0
1	65	ELU_02	Combination	Max	-32089.24	2666.24	-137.20	834.16	-510.11	4078.32	1-68	0
1	66	ELU_02	Combination	Max	-32006.83	2869.64	-142.87	817.65	-370.01	1472.71	1-69	0
1	67	ELU_02	Combination	Max	-31924.31	3075.61	-148.53	794.79	-224.20	-167.88	1-70	0
1	67.5	ELU_02	Combination	Max	-31847.02	3116.76	-151.36	784.30	-149.14	468.30	1-71	0
1	68.5	ELU_02	Combination	Max	5.35	-156.03	2.83	1058.06	0.71	-39.01	1-72	0
1	0	ELU_02	Combination	Min	0.00	0.00	0.00	0.00	0.00	0.00	1-1	0
1	0.5	ELU_02	Combination	Min	-32450.48	-3531.40	157.02	-805.31	3.50	-3663.62	1-2	0
1	1.5	ELU_02	Combination	Min	-32511.72	-3198.65	151.36	-794.74	-151.53	-5021.54	1-3	0
1	2	ELU_02	Combination	Min	-32578.21	-3157.89	148.53	-800.35	-227.16	-5838.19	1-4	0
1	3	ELU_02	Combination	Min	-32639.23	-2952.30	142.87	-817.60	-374.24	-5244.72	1-5	0
1	4	ELU_02	Combination	Min	-32771.64	-2832.73	137.20	-834.11	-515.69	-4875.54	1-6	0
1	5	ELU_02	Combination	Min	-32832.33	-2632.72	131.54	-861.55	-651.50	-4518.12	1-7	0
1	6	ELU_02	Combination	Min	-32892.90	-2435.37	125.88	-893.42	-781.67	-4248.66	1-8	0
1	7	ELU_02	Combination	Min	-32953.35	-2240.74	120.22	-928.29	-906.17	-4068.48	1-9	0

ESTRUCTURA E1. ESFUERZOS EN TABLERO PARA TODOS LOS CASOS E HIPOTESIS DE CARGA

Frame	Station	OutputCase	CaseType	StepType	P	V2	V3	T	M2	M3	FrameElem	ElemStation
Text	m	Text	Text	Text	KN	KN	KN	KN-m	KN-m	KN-m	Text	m
1	8	ELU_02	Combination	Min	-33084.56	-2134.14	114.56	-966.18	-1025.02	-4038.74	1-10	0
1	9	ELU_02	Combination	Min	-33144.61	-1945.36	108.90	-1007.07	-1138.21	-4061.38	1-11	0
1	10	ELU_02	Combination	Min	-33204.55	-1759.39	103.24	-1050.96	-1245.75	-4071.94	1-12	0
1	11	ELU_02	Combination	Min	-33334.75	-1663.08	97.58	-1097.87	-1347.62	-4298.01	1-13	0
1	12	ELU_02	Combination	Min	-33394.33	-1483.21	91.92	-1147.78	-1443.83	-4508.86	1-14	0
1	13	ELU_02	Combination	Min	-33453.78	-1306.26	86.26	-1200.70	-1534.38	-4800.27	1-15	0
1	14	ELU_02	Combination	Min	-33513.11	-1132.23	80.59	-1256.62	-1619.28	-5175.58	1-16	0
1	15	ELU_02	Combination	Min	-33635.28	-1049.85	74.93	-1315.55	-1698.51	-5705.60	1-17	0
1	16	ELU_02	Combination	Min	-33671.31	-979.59	69.27	-1377.49	-1772.08	-6224.71	1-18	0
1	17	ELU_02	Combination	Min	-33700.85	-912.35	63.61	-1442.44	-1839.99	-6750.33	1-19	0
1	18	ELU_02	Combination	Min	-33617.36	-1032.48	57.95	-1510.39	-1902.24	-7150.83	1-20	0
1	19	ELU_02	Combination	Min	-33515.24	-967.24	52.29	-1581.35	-1958.83	-7418.78	1-21	0
1	20	ELU_02	Combination	Min	-33412.30	-903.58	46.63	-1655.32	-2009.76	-7648.24	1-22	0
1	21	ELU_02	Combination	Min	-33308.57	-841.50	40.97	-1732.29	-2055.02	-7841.20	1-23	0
1	22	ELU_02	Combination	Min	-33109.39	-960.23	35.31	-1812.27	-2094.63	-8001.84	1-24	0
1	23	ELU_02	Combination	Min	-33003.11	-900.60	29.65	-1895.26	-2128.58	-8091.23	1-25	0
1	24	ELU_02	Combination	Min	-32896.05	-842.52	23.98	-1981.25	-2156.86	-8149.06	1-26	0
1	25	ELU_02	Combination	Min	-32690.38	-961.02	18.32	-2070.26	-2179.49	-8207.34	1-27	0
1	26	ELU_02	Combination	Min	-32581.11	-904.81	12.66	-2162.27	-2196.45	-8174.79	1-28	0
1	27	ELU_02	Combination	Min	-32471.13	-850.11	7.00	-2257.28	-2207.75	-8124.24	1-29	0
1	28	ELU_02	Combination	Min	-32270.31	-967.14	1.34	-2355.30	-2213.39	-8118.32	1-30	0
1	29	ELU_02	Combination	Min	-32179.66	-914.17	-4.32	-2456.33	-2213.37	-8175.71	1-31	0
1	30	ELU_02	Combination	Min	-32104.93	-152.07	-9.98	-2560.37	-2207.69	-8451.71	1-32	0
1	31	ELU_02	Combination	Min	-31976.01	608.56	-15.64	-2667.42	-2196.35	-9741.02	1-33	0
1	32	ELU_02	Combination	Min	-31683.22	1897.53	-21.30	-2871.74	-2179.35	-11830.61	1-34	0
1	33	ELU_02	Combination	Min	-31530.31	2639.05	-26.97	-2987.02	-2156.69	-13955.49	1-35	0
1	33.75	ELU_02	Combination	Min	-31365.88	3357.29	-31.21	-3010.57	-2135.97	-17007.91	1-36	0
1	34.5	ELU_02	Combination	Min	-31373.90	-6346.93	33.98	-1096.98	-2112.08	-20782.49	1-37	0
1	35.25	ELU_02	Combination	Min	-31538.32	-5561.59	29.74	-1099.13	-2135.97	-17120.26	1-38	0
1	36	ELU_02	Combination	Min	-31693.90	-4821.13	25.49	-1138.30	-2156.69	-15227.27	1-39	0
1	37	ELU_02	Combination	Min	-31986.70	-3430.75	19.83	-1156.62	-2179.35	-11748.03	1-40	0
1	38	ELU_02	Combination	Min	-32115.62	-2621.45	14.17	-1200.09	-2196.35	-9984.53	1-41	0
1	39	ELU_02	Combination	Min	-32190.35	-1812.87	8.51	-1247.22	-2207.69	-8406.19	1-42	0
1	40	ELU_02	Combination	Min	-32281.00	-1715.73	2.85	-1297.36	-2213.37	-8154.01	1-43	0
1	41	ELU_02	Combination	Min	-32470.95	-1791.05	-2.82	-1350.51	-2213.39	-8138.08	1-44	0
1	42	ELU_02	Combination	Min	-32570.41	-1697.19	-8.48	-1406.67	-2207.75	-8153.82	1-45	0
1	43	ELU_02	Combination	Min	-32679.68	-1604.51	-14.14	-1465.83	-2196.45	-8183.69	1-46	0
1	44	ELU_02	Combination	Min	-32885.35	-1689.33	-19.80	-1528.00	-2179.49	-8288.15	1-47	0
1	45	ELU_02	Combination	Min	-32992.42	-1600.47	-25.46	-1593.17	-2156.86	-8221.17	1-48	0
1	46	ELU_02	Combination	Min	-33098.70	-1513.07	-31.12	-1661.36	-2128.58	-8125.77	1-49	0
1	47	ELU_02	Combination	Min	-33297.87	-1607.12	-36.78	-1732.55	-2094.63	-8133.17	1-50	0
1	48	ELU_02	Combination	Min	-33401.61	-1523.57	-42.44	-1806.74	-2055.03	-7934.14	1-51	0
1	49	ELU_02	Combination	Min	-33504.55	-1441.72	-48.10	-1883.95	-2009.76	-7639.70	1-52	0
1	50	ELU_02	Combination	Min	-33606.67	-1361.67	-53.76	-1964.16	-1958.83	-7421.85	1-53	0
1	51	ELU_02	Combination	Min	-33690.16	-1470.43	-59.43	-2047.38	-1902.24	-7151.46	1-54	0
1	52	ELU_02	Combination	Min	-33660.62	-1395.36	-65.09	-2133.60	-1839.99	-6687.23	1-55	0
1	53	ELU_02	Combination	Min	-33624.59	-1320.88	-70.75	-2222.83	-1772.08	-6165.12	1-56	0
1	54	ELU_02	Combination	Min	-33502.42	-1237.94	-76.41	-2315.07	-1698.51	-5624.56	1-57	0
1	55	ELU_02	Combination	Min	-33443.09	-1067.09	-82.07	-2410.32	-1619.28	-5148.66	1-58	0
1	56	ELU_02	Combination	Min	-33383.64	-897.10	-87.73	-2508.57	-1534.38	-4758.28	1-59	0
1	57	ELU_02	Combination	Min	-33324.06	-728.06	-93.39	-2609.83	-1443.83	-4445.08	1-60	0
1	58	ELU_02	Combination	Min	-33193.86	-646.46	-99.05	-2714.10	-1347.62	-4208.72	1-61	0
1	59	ELU_02	Combination	Min	-33133.92	-479.15	-104.71	-2821.37	-1245.75	-4044.68	1-62	0
1	60	ELU_02	Combination	Min	-33073.87	-313.00	-110.37	-2931.65	-1138.21	-3967.18	1-63	0
1	61	ELU_02	Combination	Min	-32942.66	-233.06	-116.04	-3044.94	-1025.02	-3987.66	1-64	0
1	62	ELU_02	Combination	Min	-32882.21	-69.12	-121.70	-3161.24	-906.17	-4059.89	1-65	0
1	63	ELU_02	Combination	Min	-32821.64	93.45	-127.36	-3280.54	-781.67	-4224.01	1-66	0
1	64	ELU_02	Combination	Min	-32760.95	254.59	-133.02	-3402.85	-651.51	-4475.71	1-67	0
1	65	ELU_02	Combination	Min	-32628.54	295.85	-138.68	-3528.36	-515.69	-4827.77	1-68	0
1	66	ELU_02	Combination	Min	-32567.52	404.79	-144.34	-3657.93	-374.24	-5241.61	1-69	0
1	67	ELU_02	Combination	Min	-32506.38	512.09	-150.00	-3795.31	-227.16	-4648.19	1-70	0
1	67.5	ELU_02	Combination	Min	-32439.78	553.24	-152.83	-3805.85	-151.53	-2779.07	1-71	0
1	68.5	ELU_02	Combination	Min	-5.35	-857.69	2.83	-147.66	0.71	-389.14	1-72	0
1	0	ELU_SIS_X	Combination	Max	14.03	4.42	6.35	5.01	0.00	11.06	1-1	0
1	0.5	ELU_SIS_X	Combination	Max	-31328.24	-1045.20	280.73	479.59	8.02	-2270.36	1-2	0
1	1.5	ELU_SIS_X	Combination	Max	-31434.43	-814.96	271.08	438.85	273.21	-3041.16	1-3	0
1	2	ELU_SIS_X	Combination	Max	-31531.10	-775.88	264.45	423.13	408.61	-3619.96	1-4	0
1	3	ELU_SIS_X	Combination	Max	-31633.09	-673.01	256.68	403.71	672.61	-2468.89	1-5	0
1	4	ELU_SIS_X	Combination	Max	-31806.60	-655.59	249.20	384.95	928.55	-1481.71	1-6	0
1	5	ELU_SIS_X	Combination	Max	-31908.57	-557.01	241.93	366.87	1176.59	-532.86	1-7	0
1	6	ELU_SIS_X	Combination	Max	-32010.63	-460.18	234.81	349.43	1416.88	305.23	1-8	0
1	7	ELU_SIS_X	Combination	Max	-32112.76	-364.93	227.79	332.59	1649.49	1031.26	1-9	0
1	8	ELU_SIS_X	Combination	Max	-32285.84	-356.34	220.80	316.31	1874.45	1583.24	1-10	0
1	9	ELU_SIS_X	Combination	Max	-32387.94	-263.90	213.78	300.55	2091.76	2098.57	1-11	0
1	10	ELU_SIS_X	Combination	Max	-32490.06	-172.22	206.70	285.27	2301.38	2499.28	1-12	0
1	11	ELU_SIS_X	Combination	Max	-32662.56	-167.56	199.49	270.45	2503.22	2705.53	1-13	0
1	12	ELU_SIS_X	Combination	Max	-32764.50	-75.27	192.13	256.04	2697.16	2893.03	1-14	0
1	13	ELU_SIS_X	Combination	Max	-32866.36	23.39	184.57	242.03	2883.04	2965.20	1-15	0
1	14	ELU_SIS_X	Combination	Max	-32968.13	137.56	176.79	228.40	3060.68	2922.10	1-16	0
1	15	ELU_SIS_X	Combination	Max	-33132.78	172.96	168.76	215.11	3229.87	2690.47	1-17	0
1	16	ELU_SIS_X	Combination	Max	-33211.37	202.02	160.47	202.18	3390.38	2433.71	1-18	0

ESTRUCTURA E1. ESFUERZOS EN TABLERO PARA TODOS LOS CASOS E HIPOTESIS DE CARGA

Frame	Station	OutputCase	CaseType	StepType	P	V2	V3	T	M2	M3	FrameElem	ElemStation
Text	m	Text	Text	Text	KN	KN	KN	KN-m	KN-m	KN-m	Text	m
1	17	ELU_SIS_X	Combination	Max	-33283.59	231.80	151.90	189.60	3541.95	2190.39	1-19	0
1	18	ELU_SIS_X	Combination	Max	-33242.91	77.15	143.05	177.39	3684.33	1936.39	1-20	0
1	19	ELU_SIS_X	Combination	Max	-33183.71	110.26	133.92	165.57	3817.23	1831.65	1-21	0
1	20	ELU_SIS_X	Combination	Max	-33123.76	143.78	124.54	154.24	3940.36	1732.97	1-22	0
1	21	ELU_SIS_X	Combination	Max	-33062.96	177.37	114.92	143.50	4053.44	1639.52	1-23	0
1	22	ELU_SIS_X	Combination	Max	-32906.58	31.62	105.11	133.63	4156.18	1544.58	1-24	0
1	23	ELU_SIS_X	Combination	Max	-32842.82	65.56	95.16	125.06	4248.29	1499.95	1-25	0
1	24	ELU_SIS_X	Combination	Max	-32777.82	99.30	85.15	118.61	4329.49	1459.66	1-26	0
1	25	ELU_SIS_X	Combination	Max	-32613.34	-42.12	75.23	115.18	4399.51	1402.21	1-27	0
1	26	ELU_SIS_X	Combination	Max	-32542.84	-7.35	65.60	115.07	4458.08	1602.07	1-28	0
1	27	ELU_SIS_X	Combination	Max	-32461.74	27.45	56.60	117.65	4504.97	2028.66	1-29	0
1	28	ELU_SIS_X	Combination	Max	-32252.15	-107.95	48.80	122.10	4539.95	2427.96	1-30	0
1	29	ELU_SIS_X	Combination	Max	-32125.08	-71.78	43.05	127.87	4562.80	2961.31	1-31	0
1	30	ELU_SIS_X	Combination	Max	-32009.89	675.12	40.46	134.62	4573.36	3476.50	1-32	0
1	31	ELU_SIS_X	Combination	Max	-31839.27	1422.26	41.77	142.19	4571.46	3185.97	1-33	0
1	32	ELU_SIS_X	Combination	Max	-31504.26	2703.51	46.78	151.98	4556.96	2271.30	1-34	0
1	33	ELU_SIS_X	Combination	Max	-31309.38	3435.52	54.40	162.61	4529.77	1461.67	1-35	0
1	33.75	ELU_SIS_X	Combination	Max	-31106.00	4154.36	63.62	170.59	4499.92	-516.77	1-36	0
1	34.5	ELU_SIS_X	Combination	Max	-31106.00	-3541.36	63.56	292.85	4460.71	-3111.36	1-37	0
1	35.25	ELU_SIS_X	Combination	Max	-31309.37	-2830.16	54.36	273.18	4499.87	-607.05	1-38	0
1	36	ELU_SIS_X	Combination	Max	-31504.26	-2114.11	46.77	258.95	4529.66	217.75	1-39	0
1	37	ELU_SIS_X	Combination	Max	-31839.27	-849.73	41.79	234.02	4556.78	2373.34	1-40	0
1	38	ELU_SIS_X	Combination	Max	-32009.89	-117.05	40.50	216.26	4571.21	3364.21	1-41	0
1	39	ELU_SIS_X	Combination	Max	-32125.08	613.48	43.11	199.32	4573.05	3541.29	1-42	0
1	40	ELU_SIS_X	Combination	Max	-32252.14	631.13	48.86	183.37	4562.44	2987.66	1-43	0
1	41	ELU_SIS_X	Combination	Max	-32461.73	474.96	56.66	168.73	4539.52	2403.53	1-44	0
1	42	ELU_SIS_X	Combination	Max	-32542.83	486.69	65.65	155.95	4504.50	1975.99	1-45	0
1	43	ELU_SIS_X	Combination	Max	-32613.33	496.07	75.27	145.85	4457.57	1582.10	1-46	0
1	44	ELU_SIS_X	Combination	Max	-32777.82	326.82	85.18	139.06	4398.96	1308.47	1-47	0
1	45	ELU_SIS_X	Combination	Max	-32842.82	330.17	95.17	135.28	4328.91	1373.33	1-48	0
1	46	ELU_SIS_X	Combination	Max	-32906.58	331.03	105.11	133.61	4247.68	1451.08	1-49	0
1	47	ELU_SIS_X	Combination	Max	-33062.96	149.48	114.92	133.27	4155.55	1401.02	1-50	0
1	48	ELU_SIS_X	Combination	Max	-33123.76	144.81	124.52	133.79	4052.80	1529.58	1-51	0
1	49	ELU_SIS_X	Combination	Max	-33183.71	138.03	133.90	134.92	3939.71	1663.84	1-52	0
1	50	ELU_SIS_X	Combination	Max	-33242.91	129.47	143.01	136.53	3816.58	1804.32	1-53	0
1	51	ELU_SIS_X	Combination	Max	-33283.59	-67.35	151.85	138.54	3683.68	1906.94	1-54	0
1	52	ELU_SIS_X	Combination	Max	-33211.37	-79.16	160.41	140.92	3541.32	2184.19	1-55	0
1	53	ELU_SIS_X	Combination	Max	-33132.78	-89.48	168.70	143.65	3389.77	2475.56	1-56	0
1	54	ELU_SIS_X	Combination	Max	-32968.13	-87.08	176.72	146.73	3229.28	2751.36	1-57	0
1	55	ELU_SIS_X	Combination	Max	-32866.36	14.66	184.49	150.16	3060.12	2927.50	1-58	0
1	56	ELU_SIS_X	Combination	Max	-32764.50	132.67	192.04	153.98	2882.52	2988.35	1-59	0
1	57	ELU_SIS_X	Combination	Max	-32662.56	257.80	199.40	158.18	2696.68	2933.65	1-60	0
1	58	ELU_SIS_X	Combination	Max	-32490.06	298.44	206.60	162.81	2502.79	2773.36	1-61	0
1	59	ELU_SIS_X	Combination	Max	-32387.94	426.43	213.68	167.89	2301.00	2504.80	1-62	0
1	60	ELU_SIS_X	Combination	Max	-32285.84	554.42	220.69	173.45	2091.43	2120.79	1-63	0
1	61	ELU_SIS_X	Combination	Max	-32112.77	597.08	227.68	179.54	1874.16	1614.11	1-64	0
1	62	ELU_SIS_X	Combination	Max	-32010.63	724.43	234.71	186.19	1649.25	1017.43	1-65	0
1	63	ELU_SIS_X	Combination	Max	-31908.57	850.97	241.83	193.44	1416.69	307.27	1-66	0
1	64	ELU_SIS_X	Combination	Max	-31806.60	976.52	249.10	201.33	1176.45	-515.24	1-67	0
1	65	ELU_SIS_X	Combination	Max	-31633.08	1017.90	256.58	209.90	928.44	-1460.87	1-68	0
1	66	ELU_SIS_X	Combination	Max	-31531.10	1141.48	264.35	219.19	672.54	-2488.81	1-69	0
1	67	ELU_SIS_X	Combination	Max	-31434.42	1262.85	270.99	238.02	408.58	-2437.97	1-70	0
1	67.5	ELU_SIS_X	Combination	Max	-31328.23	1310.79	280.65	265.68	273.19	-911.91	1-71	0
1	68.5	ELU_SIS_X	Combination	Max	14.03	-153.88	6.36	11.76	3.18	-27.23	1-72	0
1	0	ELU_SIS_X	Combination	Min	-14.03	-4.42	-6.35	-5.01	0.00	-11.06	1-1	0
1	0.5	ELU_SIS_X	Combination	Min	-33097.58	-1635.26	-280.67	-269.08	-7.92	-3961.43	1-2	0
1	1.5	ELU_SIS_X	Combination	Min	-33135.27	-1388.16	-271.02	-238.09	-273.18	-5270.09	1-3	0
1	2	ELU_SIS_X	Combination	Min	-33182.26	-1341.17	-264.38	-222.37	-408.60	-6128.23	1-4	0
1	3	ELU_SIS_X	Combination	Min	-33223.70	-1217.29	-256.62	-212.70	-672.66	-5368.48	1-5	0
1	4	ELU_SIS_X	Combination	Min	-33336.38	-1175.61	-249.14	-203.69	-928.67	-4752.90	1-6	0
1	5	ELU_SIS_X	Combination	Min	-33377.17	-1049.76	-241.87	-195.36	-1176.78	-4153.38	1-7	0
1	6	ELU_SIS_X	Combination	Min	-33417.64	-922.92	-234.75	-187.67	-1417.13	-3632.03	1-8	0
1	7	ELU_SIS_X	Combination	Min	-33457.80	-795.27	-227.73	-180.58	-1649.79	-3191.19	1-9	0
1	8	ELU_SIS_X	Combination	Min	-33568.52	-752.32	-220.73	-174.05	-1874.82	-2890.16	1-10	0
1	9	ELU_SIS_X	Combination	Min	-33607.91	-624.04	-213.72	-168.04	-2092.20	-2585.27	1-11	0
1	10	ELU_SIS_X	Combination	Min	-33647.05	-495.75	-206.63	-162.52	-2301.88	-2351.58	1-12	0
1	11	ELU_SIS_X	Combination	Min	-33756.34	-454.83	-199.43	-157.44	-2503.78	-2261.47	1-13	0
1	12	ELU_SIS_X	Combination	Min	-33794.94	-329.43	-192.07	-152.79	-2697.78	-2158.20	1-14	0
1	13	ELU_SIS_X	Combination	Min	-33833.37	-211.14	-184.51	-148.53	-2883.72	-2111.72	1-15	0
1	14	ELU_SIS_X	Combination	Min	-33871.64	-109.12	-176.73	-144.64	-3061.43	-2134.76	1-16	0
1	15	ELU_SIS_X	Combination	Min	-33972.71	-106.45	-168.70	-141.11	-3230.68	-2291.71	1-17	0
1	16	ELU_SIS_X	Combination	Min	-33987.56	-116.50	-160.40	-137.92	-3391.25	-2426.72	1-18	0
1	17	ELU_SIS_X	Combination	Min	-33995.80	-128.06	-151.83	-135.09	-3542.89	-2491.20	1-19	0
1	18	ELU_SIS_X	Combination	Min	-33890.89	-324.62	-142.98	-132.63	-3685.33	-2521.75	1-20	0
1	19	ELU_SIS_X	Combination	Min	-33767.23	-332.93	-133.86	-130.56	-3818.29	-2351.49	1-21	0
1	20	ELU_SIS_X	Combination	Min	-33642.70	-339.47	-124.48	-128.98	-3941.49	-2125.30	1-22	0
1	21	ELU_SIS_X	Combination	Min	-33517.40	-343.90	-114.86	-127.99	-4054.63	-1854.35	1-23	0
1	22	ELU_SIS_X	Combination	Min	-33296.82	-525.22	-105.05	-127.87	-4157.44	-1534.29	1-24	0
1	23	ELU_SIS_X	Combination	Min	-33169.41	-524.14	-95.09	-129.05	-4249.61	-1133.04	1-25	0
1	24	ELU_SIS_X	Combination	Min	-33041.65	-520.58	-85.09	-132.35	-4330.87	-690.02	1-26	0
1	25	ELU_SIS_X	Combination	Min	-32816.18	-689.62	-75.17	-138.67	-4400.95	-249.73	1-27	0

ESTRUCTURA E1. ESFUERZOS EN TABLERO PARA TODOS LOS CASOS E HIPOTESIS DE CARGA

Frame	Station	OutputCase	CaseType	StepType	P	V2	V3	T	M2	M3	FrameElem	ElemStation
Text	m	Text	Text	Text	KN	KN	KN	KN-m	KN-m	KN-m	Text	m
1	26	ELU_SIS_X	Combination	Min	-32689.53	-680.04	-65.54	-148.31	-4459.59	97.87	1-28	0
1	27	ELU_SIS_X	Combination	Min	-32572.06	-668.11	-56.54	-160.64	-4506.54	245.79	1-29	0
1	28	ELU_SIS_X	Combination	Min	-32380.36	-824.11	-48.73	-174.84	-4541.57	326.65	1-30	0
1	29	ELU_SIS_X	Combination	Min	-32304.74	-806.28	-42.99	-190.36	-4564.49	475.94	1-31	0
1	30	ELU_SIS_X	Combination	Min	-32249.10	-75.60	-40.39	-206.86	-4575.11	527.76	1-32	0
1	31	ELU_SIS_X	Combination	Min	-32140.50	657.23	-41.71	-224.18	-4573.27	-306.22	1-33	0
1	32	ELU_SIS_X	Combination	Min	-31868.53	1921.76	-46.72	-248.59	-4558.84	-1836.20	1-34	0
1	33	ELU_SIS_X	Combination	Min	-31736.20	2642.06	-54.34	-268.97	-4531.71	-3304.00	1-35	0
1	33.75	ELU_SIS_X	Combination	Min	-31594.69	3353.38	-63.55	-281.83	-4501.91	-5804.97	1-36	0
1	34.5	ELU_SIS_X	Combination	Min	-31594.69	-4350.21	-63.62	-171.87	-4462.74	-8985.10	1-37	0
1	35.25	ELU_SIS_X	Combination	Min	-31736.20	-3627.30	-54.43	-161.95	-4501.85	-5957.40	1-38	0
1	36	ELU_SIS_X	Combination	Min	-31868.52	-2903.24	-46.83	-152.59	-4531.60	-4602.95	1-39	0
1	37	ELU_SIS_X	Combination	Min	-32140.50	-1621.84	-41.86	-142.28	-4558.66	-1771.06	1-40	0
1	38	ELU_SIS_X	Combination	Min	-32249.10	-874.54	-40.57	-134.27	-4573.03	-159.46	1-41	0
1	39	ELU_SIS_X	Combination	Min	-32304.74	-127.48	-43.17	-127.08	-4574.80	574.02	1-42	0
1	40	ELU_SIS_X	Combination	Min	-32380.36	-91.14	-48.92	-120.88	-4564.13	498.99	1-43	0
1	41	ELU_SIS_X	Combination	Min	-32572.06	-226.35	-56.72	-115.99	-4541.15	311.56	1-44	0
1	42	ELU_SIS_X	Combination	Min	-32689.53	-191.37	-65.71	-112.96	-4506.06	211.31	1-45	0
1	43	ELU_SIS_X	Combination	Min	-32816.18	-156.40	-75.33	-112.62	-4459.07	102.05	1-46	0
1	44	ELU_SIS_X	Combination	Min	-33041.66	-297.62	-85.24	-115.57	-4400.39	-317.61	1-47	0
1	45	ELU_SIS_X	Combination	Min	-33169.41	-263.66	-95.23	-121.54	-4330.28	-747.90	1-48	0
1	46	ELU_SIS_X	Combination	Min	-33296.83	-229.50	-105.18	-129.63	-4249.00	-1151.26	1-49	0
1	47	ELU_SIS_X	Combination	Min	-33517.41	-375.03	-114.98	-139.04	-4156.80	-1649.39	1-50	0
1	48	ELU_SIS_X	Combination	Min	-33642.70	-341.19	-124.59	-149.30	-4053.99	-1938.29	1-51	0
1	49	ELU_SIS_X	Combination	Min	-33767.23	-307.43	-133.96	-160.18	-3940.84	-2168.09	1-52	0
1	50	ELU_SIS_X	Combination	Min	-33890.89	-274.07	-143.07	-171.54	-3817.64	-2348.28	1-53	0
1	51	ELU_SIS_X	Combination	Min	-33995.80	-428.48	-151.91	-183.30	-3684.68	-2518.57	1-54	0
1	52	ELU_SIS_X	Combination	Min	-33987.56	-398.44	-160.47	-195.43	-3542.26	-2468.80	1-55	0
1	53	ELU_SIS_X	Combination	Min	-33972.71	-369.11	-168.76	-207.91	-3390.64	-2345.38	1-56	0
1	54	ELU_SIS_X	Combination	Min	-33871.64	-333.44	-176.78	-220.73	-3230.10	-2191.52	1-57	0
1	55	ELU_SIS_X	Combination	Min	-33833.37	-219.00	-184.56	-233.92	-3060.87	-2088.33	1-58	0
1	56	ELU_SIS_X	Combination	Min	-33794.93	-120.06	-192.11	-247.48	-2883.21	-2048.88	1-59	0
1	57	ELU_SIS_X	Combination	Min	-33756.34	-27.49	-199.46	-261.44	-2697.30	-2075.26	1-60	0
1	58	ELU_SIS_X	Combination	Min	-33647.04	-22.55	-206.66	-275.82	-2503.35	-2156.73	1-61	0
1	59	ELU_SIS_X	Combination	Min	-33607.91	69.42	-213.75	-290.65	-2301.49	-2301.60	1-62	0
1	60	ELU_SIS_X	Combination	Min	-33568.51	162.16	-220.76	-305.96	-2091.86	-2519.08	1-63	0
1	61	ELU_SIS_X	Combination	Min	-33457.80	171.04	-227.75	-321.80	-1874.53	-2816.86	1-64	0
1	62	ELU_SIS_X	Combination	Min	-33417.64	266.58	-234.77	-338.20	-1649.56	-3161.16	1-65	0
1	63	ELU_SIS_X	Combination	Min	-33377.17	363.71	-241.89	-355.19	-1416.94	-3584.76	1-66	0
1	64	ELU_SIS_X	Combination	Min	-33336.39	462.59	-249.16	-372.83	-1176.63	-4088.18	1-67	0
1	65	ELU_SIS_X	Combination	Min	-33223.71	480.31	-256.65	-391.15	-928.57	-4688.21	1-68	0
1	66	ELU_SIS_X	Combination	Min	-33182.26	583.49	-264.42	-410.19	-672.60	-5341.33	1-69	0
1	67	ELU_SIS_X	Combination	Min	-33135.27	689.65	-271.05	-438.77	-408.57	-4840.39	1-70	0
1	67.5	ELU_SIS_X	Combination	Min	-33097.58	728.55	-280.71	-466.44	-273.16	-2969.97	1-71	0
1	68.5	ELU_SIS_X	Combination	Min	-14.03	-166.68	-6.36	-6.89	-3.18	-53.89	1-72	0
1	0	ELU_SIS_Y	Combination	Max	4.85	3.58	21.18	16.69	0.00	3.82	1-1	0
1	0.5	ELU_SIS_Y	Combination	Max	-31942.35	-1085.86	935.54	918.51	26.41	-2860.18	1-2	0
1	1.5	ELU_SIS_Y	Combination	Max	-32022.89	-854.92	903.37	813.23	910.48	-3652.58	1-3	0
1	2	ELU_SIS_Y	Combination	Max	-32100.95	-815.41	881.26	760.84	1361.79	-4251.80	1-4	0
1	3	ELU_SIS_Y	Combination	Max	-32180.34	-712.09	855.39	726.10	2241.74	-3082.55	1-5	0
1	4	ELU_SIS_Y	Combination	Max	-32331.25	-694.31	830.44	692.65	3094.81	-2076.56	1-6	0
1	5	ELU_SIS_Y	Combination	Max	-32410.63	-595.46	806.21	660.43	3921.57	-1109.16	1-7	0
1	6	ELU_SIS_Y	Combination	Max	-32490.10	-498.45	782.49	629.30	4722.45	-252.65	1-8	0
1	7	ELU_SIS_Y	Combination	Max	-32569.65	-403.10	759.07	599.14	5497.73	491.75	1-9	0
1	8	ELU_SIS_Y	Combination	Max	-32720.14	-394.51	735.76	569.79	6247.53	1062.15	1-10	0
1	9	ELU_SIS_Y	Combination	Max	-32799.66	-302.13	712.38	541.15	6971.83	1596.02	1-11	0
1	10	ELU_SIS_Y	Combination	Max	-32879.21	-210.59	688.76	513.08	7670.48	2015.46	1-12	0
1	11	ELU_SIS_Y	Combination	Max	-33029.14	-206.13	664.75	485.48	8343.20	2240.68	1-13	0
1	12	ELU_SIS_Y	Combination	Max	-33108.51	-114.08	640.20	458.23	8989.57	2447.45	1-14	0
1	13	ELU_SIS_Y	Combination	Max	-33187.82	-15.70	615.01	431.26	9609.10	2539.20	1-15	0
1	14	ELU_SIS_Y	Combination	Max	-33267.03	98.18	589.07	404.49	10201.15	2516.00	1-16	0
1	15	ELU_SIS_Y	Combination	Max	-33409.15	133.28	562.31	377.87	10765.04	2304.61	1-17	0
1	16	ELU_SIS_Y	Combination	Max	-33465.21	162.04	534.66	351.38	11300.00	2068.43	1-18	0
1	17	ELU_SIS_Y	Combination	Max	-33514.91	191.53	506.09	325.01	11805.17	1846.05	1-19	0
1	18	ELU_SIS_Y	Combination	Max	-33451.74	36.58	476.60	298.83	12279.69	1613.32	1-20	0
1	19	ELU_SIS_Y	Combination	Max	-33370.08	69.41	446.19	272.95	12722.61	1530.22	1-21	0
1	20	ELU_SIS_Y	Combination	Max	-33287.69	102.64	414.92	247.61	13132.99	1453.52	1-22	0
1	21	ELU_SIS_Y	Combination	Max	-33204.51	135.93	382.86	223.25	13509.86	1382.39	1-23	0
1	22	ELU_SIS_Y	Combination	Max	-33025.84	-10.14	350.14	200.70	13852.26	1310.10	1-24	0
1	23	ELU_SIS_Y	Combination	Max	-32939.92	23.46	316.96	181.50	14159.23	1288.41	1-25	0
1	24	ELU_SIS_Y	Combination	Max	-32853.03	56.84	283.62	168.28	14429.82	1271.28	1-26	0
1	25	ELU_SIS_Y	Combination	Max	-32667.24	-84.97	250.54	164.11	14663.14	1237.03	1-27	0
1	26	ELU_SIS_Y	Combination	Max	-32577.11	-50.61	218.44	169.96	14858.32	1459.81	1-28	0
1	27	ELU_SIS_Y	Combination	Max	-32483.33	-16.23	188.45	183.74	15014.55	1908.44	1-29	0
1	28	ELU_SIS_Y	Combination	Max	-32280.05	-152.03	162.42	202.71	15131.07	2327.74	1-30	0
1	29	ELU_SIS_Y	Combination	Max	-32171.05	-116.24	143.27	225.02	15207.20	2876.84	1-31	0
1	30	ELU_SIS_Y	Combination	Max	-32076.73	630.31	134.62	249.60	15242.32	3400.05	1-32	0
1	31	ELU_SIS_Y	Combination	Max	-31927.84	1377.17	139.01	275.84	15235.91	3106.69	1-33	0
1	32	ELU_SIS_Y	Combination	Max	-31614.90	2658.20	155.70	304.89	15187.52	2178.79	1-34	0
1	33	ELU_SIS_Y	Combination	Max	-31441.93	3390.08	181.11	339.07	15096.82	1353.44	1-35	0
1	33.75	ELU_SIS_Y	Combination	Max	-31260.22	4108.85	211.82	367.39	14997.27	-638.91	1-36	0

ESTRUCTURA E1. ESFUERZOS EN TABLERO PARA TODOS LOS CASOS E HIPOTESIS DE CARGA

Frame	Station	OutputCase	CaseType	StepType	P	V2	V3	T	M2	M3	FrameElem	ElemStation
Text	m	Text	Text	Text	KN	KN	KN	KN-m	KN-m	KN-m	Text	m
1	34.5	ELU_SIS_Y	Combination	Max	-31260.21	-3586.87	211.78	489.80	14866.52	-3262.61	1-37	0
1	35.25	ELU_SIS_Y	Combination	Max	-31441.93	-2875.60	181.13	449.81	14997.09	-744.73	1-38	0
1	36	ELU_SIS_Y	Combination	Max	-31614.90	-2159.42	155.81	412.04	15096.46	89.94	1-39	0
1	37	ELU_SIS_Y	Combination	Max	-31927.83	-894.82	139.23	367.85	15186.93	2266.96	1-40	0
1	38	ELU_SIS_Y	Combination	Max	-32076.73	-161.85	134.93	331.44	15235.09	3273.58	1-41	0
1	39	ELU_SIS_Y	Combination	Max	-32171.04	569.02	143.62	296.69	15241.29	3457.97	1-42	0
1	40	ELU_SIS_Y	Combination	Max	-32280.05	587.05	162.77	264.21	15205.97	2901.61	1-43	0
1	41	ELU_SIS_Y	Combination	Max	-32483.32	431.29	188.77	235.06	15129.66	2306.11	1-44	0
1	42	ELU_SIS_Y	Combination	Max	-32577.11	443.44	218.74	211.09	15012.98	1861.63	1-45	0
1	43	ELU_SIS_Y	Combination	Max	-32667.23	453.22	250.80	195.00	14856.60	1447.77	1-46	0
1	44	ELU_SIS_Y	Combination	Max	-32853.02	284.36	283.84	188.88	14661.29	1152.64	1-47	0
1	45	ELU_SIS_Y	Combination	Max	-32939.92	288.07	317.15	191.78	14427.87	1195.35	1-48	0
1	46	ELU_SIS_Y	Combination	Max	-33025.84	289.27	350.30	200.69	14157.18	1250.73	1-49	0
1	47	ELU_SIS_Y	Combination	Max	-33204.51	108.04	382.98	212.97	13850.15	1178.35	1-50	0
1	48	ELU_SIS_Y	Combination	Max	-33287.69	103.67	415.01	227.08	13507.71	1284.76	1-51	0
1	49	ELU_SIS_Y	Combination	Max	-33370.08	97.18	446.25	242.17	13130.82	1397.12	1-52	0
1	50	ELU_SIS_Y	Combination	Max	-33451.74	88.91	476.62	257.82	12720.44	1515.97	1-53	0
1	51	ELU_SIS_Y	Combination	Max	-33514.91	-107.62	506.09	273.77	12277.55	1597.27	1-54	0
1	52	ELU_SIS_Y	Combination	Max	-33465.21	-119.14	534.62	289.92	11803.08	1853.50	1-55	0
1	53	ELU_SIS_Y	Combination	Max	-33409.14	-129.16	562.24	306.19	11297.97	2124.17	1-56	0
1	54	ELU_SIS_Y	Combination	Max	-33267.03	-126.46	588.98	322.60	10763.10	2379.60	1-57	0
1	55	ELU_SIS_Y	Combination	Max	-33187.82	-24.43	614.89	339.16	10199.32	2535.68	1-58	0
1	56	ELU_SIS_Y	Combination	Max	-33108.51	93.86	640.06	355.92	9607.38	2576.79	1-59	0
1	57	ELU_SIS_Y	Combination	Max	-33029.14	219.23	664.59	372.96	8987.99	2502.67	1-60	0
1	58	ELU_SIS_Y	Combination	Max	-32879.21	260.06	688.59	390.36	8341.76	2323.25	1-61	0
1	59	ELU_SIS_Y	Combination	Max	-32799.66	388.20	712.19	408.23	7669.20	2035.84	1-62	0
1	60	ELU_SIS_Y	Combination	Max	-32720.14	516.25	735.56	426.68	6970.71	1633.21	1-63	0
1	61	ELU_SIS_Y	Combination	Max	-32569.65	558.90	758.86	445.84	6246.57	1108.09	1-64	0
1	62	ELU_SIS_Y	Combination	Max	-32490.10	686.16	782.28	465.82	5496.94	493.08	1-65	0
1	63	ELU_SIS_Y	Combination	Max	-32410.63	812.51	806.01	486.77	4721.82	-235.38	1-66	0
1	64	ELU_SIS_Y	Combination	Max	-32331.25	937.80	830.24	508.81	3921.09	-1074.24	1-67	0
1	65	ELU_SIS_Y	Combination	Max	-32180.34	978.82	855.20	532.08	3094.47	-2040.38	1-68	0
1	66	ELU_SIS_Y	Combination	Max	-32100.95	1101.95	881.10	556.71	2241.53	-3087.10	1-69	0
1	67	ELU_SIS_Y	Combination	Max	-32022.89	1222.89	903.23	612.23	1361.69	-3038.94	1-70	0
1	67.5	ELU_SIS_Y	Combination	Max	-31942.35	1270.12	935.43	704.45	910.42	-1466.41	1-71	0
1	68.5	ELU_SIS_Y	Combination	Max	4.85	-154.72	21.20	23.46	10.60	-34.49	1-72	0
1	0	ELU_SIS_Y	Combination	Min	-4.85	-3.58	-21.18	-16.69	0.00	-3.82	1-1	0
1	0.5	ELU_SIS_Y	Combination	Min	-32483.47	-1594.60	-935.48	-708.00	-26.31	-337.61	1-2	0
1	1.5	ELU_SIS_Y	Combination	Min	-32546.81	-1348.20	-903.31	-612.47	-910.45	-465.68	1-3	0
1	2	ELU_SIS_Y	Combination	Min	-32612.40	-1301.64	-881.20	-560.09	-1361.79	-549.39	1-4	0
1	3	ELU_SIS_Y	Combination	Min	-32676.45	-1178.21	-855.32	-535.09	-2241.80	-473.82	1-5	0
1	4	ELU_SIS_Y	Combination	Min	-32811.73	-1136.88	-830.38	-511.40	-3094.93	-415.05	1-6	0
1	5	ELU_SIS_Y	Combination	Min	-32875.11	-1011.30	-806.15	-488.93	-3921.75	-357.08	1-7	0
1	6	ELU_SIS_Y	Combination	Min	-32938.17	-884.65	-782.42	-467.55	-4722.70	-307.16	1-8	0
1	7	ELU_SIS_Y	Combination	Min	-33000.92	-757.09	-759.01	-447.13	-5498.04	-265.68	1-9	0
1	8	ELU_SIS_Y	Combination	Min	-33134.22	-714.15	-735.70	-427.54	-6247.90	-236.07	1-10	0
1	9	ELU_SIS_Y	Combination	Min	-33196.19	-585.80	-712.32	-408.64	-6972.27	-208.71	1-11	0
1	10	ELU_SIS_Y	Combination	Min	-33257.90	-457.38	-688.70	-390.32	-7670.98	-186.76	1-12	0
1	11	ELU_SIS_Y	Combination	Min	-33389.76	-416.26	-664.68	-372.47	-8343.76	-180.63	1-13	0
1	12	ELU_SIS_Y	Combination	Min	-33450.92	-290.61	-640.14	-354.98	-8990.20	-171.62	1-14	0
1	13	ELU_SIS_Y	Combination	Min	-33511.91	-172.05	-614.95	-337.75	-9609.78	-168.72	1-15	0
1	14	ELU_SIS_Y	Combination	Min	-33572.74	-69.74	-589.01	-320.73	-10201.90	-172.65	1-16	0
1	15	ELU_SIS_Y	Combination	Min	-33696.34	-66.77	-562.24	-303.86	-10765.86	-190.85	1-17	0
1	16	ELU_SIS_Y	Combination	Min	-33733.72	-76.52	-534.60	-287.12	-11300.87	-206.45	1-18	0
1	17	ELU_SIS_Y	Combination	Min	-33764.48	-87.78	-506.03	-270.50	-11806.11	-215.85	1-19	0
1	18	ELU_SIS_Y	Combination	Min	-33682.05	-284.06	-476.54	-254.07	-12280.68	-220.69	1-20	0
1	19	ELU_SIS_Y	Combination	Min	-33580.86	-292.08	-446.13	-237.94	-12723.67	-205.05	1-21	0
1	20	ELU_SIS_Y	Combination	Min	-33478.77	-298.33	-414.86	-222.35	-13134.11	-184.85	1-22	0
1	21	ELU_SIS_Y	Combination	Min	-33375.85	-302.46	-382.79	-207.74	-13511.05	-159.22	1-23	0
1	22	ELU_SIS_Y	Combination	Min	-33177.57	-483.46	-350.08	-194.94	-13853.51	-130.81	1-24	0
1	23	ELU_SIS_Y	Combination	Min	-33072.31	-482.04	-316.90	-185.49	-14160.54	-92.50	1-25	0
1	24	ELU_SIS_Y	Combination	Min	-32966.45	-478.11	-283.55	-182.02	-14431.20	-50.64	1-26	0
1	25	ELU_SIS_Y	Combination	Min	-32762.28	-646.76	-250.48	-187.60	-14664.58	-84.55	1-27	0
1	26	ELU_SIS_Y	Combination	Min	-32655.25	-636.78	-218.38	-203.20	-14859.83	240.13	1-28	0
1	27	ELU_SIS_Y	Combination	Min	-32550.47	-624.44	-188.38	-226.73	-15016.12	366.01	1-29	0
1	28	ELU_SIS_Y	Combination	Min	-32352.45	-780.03	-162.36	-255.45	-15132.70	426.87	1-30	0
1	29	ELU_SIS_Y	Combination	Min	-32258.78	-761.82	-143.21	-287.51	-15208.89	560.41	1-31	0
1	30	ELU_SIS_Y	Combination	Min	-32182.26	-30.79	-134.56	-321.84	-15244.07	604.21	1-32	0
1	31	ELU_SIS_Y	Combination	Min	-32051.93	702.33	-138.95	-357.83	-15237.72	-226.93	1-33	0
1	32	ELU_SIS_Y	Combination	Min	-31757.89	1967.07	-155.64	-401.50	-15189.40	-1741.69	1-34	0
1	33	ELU_SIS_Y	Combination	Min	-31603.65	2687.50	-181.04	-445.43	-15098.76	-3194.77	1-35	0
1	33.75	ELU_SIS_Y	Combination	Min	-31440.47	3398.89	-211.76	-478.62	-14999.26	-5680.83	1-36	0
1	34.5	ELU_SIS_Y	Combination	Min	-31440.47	-4304.70	-211.84	-368.82	-14868.55	-8833.85	1-37	0
1	35.25	ELU_SIS_Y	Combination	Min	-31603.65	-3581.86	-181.19	-338.57	-14999.08	-5794.72	1-38	0
1	36	ELU_SIS_Y	Combination	Min	-31757.88	-2857.93	-155.87	-305.68	-15098.40	-4478.15	1-39	0
1	37	ELU_SIS_Y	Combination	Min	-32051.93	-1576.75	-139.29	-276.11	-15188.80	-1666.69	1-40	0
1	38	ELU_SIS_Y	Combination	Min	-32182.26	-829.74	-134.99	-249.45	-15236.90	-68.84	1-41	0
1	39	ELU_SIS_Y	Combination	Min	-32258.78	-83.02	-143.68	-224.45	-15243.04	657.33	1-42	0
1	40	ELU_SIS_Y	Combination	Min	-32352.46	-47.06	-162.84	-201.72	-15207.66	585.04	1-43	0
1	41	ELU_SIS_Y	Combination	Min	-32550.47	-182.68	-188.84	-182.32	-15131.29	408.98	1-44	0
1	42	ELU_SIS_Y	Combination	Min	-32655.26	-148.11	-218.80	-168.11	-15014.54	325.66	1-45	0

ESTRUCTURA E1. ESFUERZOS EN TABLERO PARA TODOS LOS CASOS E HIPOTESIS DE CARGA

Frame	Station	OutputCase	CaseType	StepType	P	V2	V3	T	M2	M3	FrameElem	ElemStation
Text	m	Text	Text	Text	KN	KN	KN	KN-m	KN-m	KN-m	Text	m
1	43	ELU_SIS_Y	Combination	Min	-32762.29	-113.55	-250.87	-161.77	-14858.10	236.39	1-46	0
1	44	ELU_SIS_Y	Combination	Min	-32966.45	-255.16	-283.90	-165.39	-14662.73	-161.79	1-47	0
1	45	ELU_SIS_Y	Combination	Min	-33072.31	-221.56	-317.22	-178.05	-14429.24	-569.92	1-48	0
1	46	ELU_SIS_Y	Combination	Min	-33177.57	-187.74	-350.36	-196.70	-14158.50	-950.91	1-49	0
1	47	ELU_SIS_Y	Combination	Min	-33375.85	-333.59	-383.04	-218.73	-13851.41	-1426.73	1-50	0
1	48	ELU_SIS_Y	Combination	Min	-33478.77	-300.05	-415.07	-242.59	-13508.90	-1681.48	1-51	0
1	49	ELU_SIS_Y	Combination	Min	-33580.86	-266.59	-446.31	-267.43	-13131.95	-1896.37	1-52	0
1	50	ELU_SIS_Y	Combination	Min	-33682.06	-233.51	-476.69	-292.83	-12721.51	-2055.94	1-53	0
1	51	ELU_SIS_Y	Combination	Min	-33764.48	-388.21	-506.15	-318.53	-12278.55	-2200.90	1-54	0
1	52	ELU_SIS_Y	Combination	Min	-33733.72	-358.47	-534.68	-344.43	-11804.02	-2131.11	1-55	0
1	53	ELU_SIS_Y	Combination	Min	-33696.34	-329.43	-562.30	-370.45	-11298.84	-1991.00	1-56	0
1	54	ELU_SIS_Y	Combination	Min	-33572.74	-294.06	-589.04	-396.61	-10763.91	-1820.76	1-57	0
1	55	ELU_SIS_Y	Combination	Min	-33511.91	-179.91	-614.96	-422.91	-10200.06	-1696.51	1-58	0
1	56	ELU_SIS_Y	Combination	Min	-33450.92	-81.24	-640.13	-449.43	-9608.07	-1637.32	1-59	0
1	57	ELU_SIS_Y	Combination	Min	-33389.76	11.08	-664.65	-476.21	-8988.61	-1644.27	1-60	0
1	58	ELU_SIS_Y	Combination	Min	-33257.89	15.83	-688.65	-503.37	-8342.32	-1708.62	1-61	0
1	59	ELU_SIS_Y	Combination	Min	-33196.19	107.65	-712.26	-530.99	-7669.70	-1838.64	1-62	0
1	60	ELU_SIS_Y	Combination	Min	-33134.21	200.32	-735.62	-559.19	-6971.15	-2031.50	1-63	0
1	61	ELU_SIS_Y	Combination	Min	-33000.92	209.21	-758.93	-588.09	-6246.95	-2308.84	1-64	0
1	62	ELU_SIS_Y	Combination	Min	-32938.17	304.86	-782.34	-617.83	-5497.25	-2638.81	1-65	0
1	63	ELU_SIS_Y	Combination	Min	-32875.11	402.17	-806.07	-648.52	-4722.07	-3041.11	1-66	0
1	64	ELU_SIS_Y	Combination	Min	-32811.73	501.32	-830.31	-680.31	-3921.28	-3527.18	1-67	0
1	65	ELU_SIS_Y	Combination	Min	-32676.46	519.40	-855.27	-713.34	-3094.60	-4106.70	1-68	0
1	66	ELU_SIS_Y	Combination	Min	-32612.41	623.01	-881.16	-747.72	-2241.59	-4744.04	1-69	0
1	67	ELU_SIS_Y	Combination	Min	-32546.81	729.61	-903.29	-812.98	-1361.68	-4242.43	1-70	0
1	67.5	ELU_SIS_Y	Combination	Min	-32483.47	769.21	-935.49	-905.21	-910.39	-2409.48	1-71	0
1	68.5	ELU_SIS_Y	Combination	Min	-4.85	-165.85	-21.20	-18.58	-10.60	-46.64	1-72	0
1	0	ELU_SIS_Z	Combination	Max	6.99	11.11	6.35	5.01	0.00	5.51	1-1	0
1	0.5	ELU_SIS_Z	Combination	Max	-31927.49	-689.72	280.73	479.59	8.02	-2854.97	1-2	0
1	1.5	ELU_SIS_Z	Combination	Max	-32002.45	-466.98	271.08	438.85	273.21	-3260.48	1-3	0
1	2	ELU_SIS_Z	Combination	Max	-32076.45	-435.26	264.44	423.13	408.61	-3668.39	1-4	0
1	3	ELU_SIS_Z	Combination	Max	-32151.13	-346.46	256.68	403.71	672.60	-2107.90	1-5	0
1	4	ELU_SIS_Z	Combination	Max	-32297.69	-347.98	249.20	384.95	928.54	-734.67	1-6	0
1	5	ELU_SIS_Z	Combination	Max	-32373.14	-272.94	241.93	366.87	1176.59	580.02	1-7	0
1	6	ELU_SIS_Z	Combination	Max	-32449.14	-203.92	234.81	349.43	1416.87	1759.22	1-8	0
1	7	ELU_SIS_Z	Combination	Max	-32525.71	-140.34	227.79	332.59	1649.47	2797.39	1-9	0
1	8	ELU_SIS_Z	Combination	Max	-32673.68	-166.78	220.79	316.31	1874.43	3628.65	1-10	0
1	9	ELU_SIS_Z	Combination	Max	-32751.09	-112.10	213.78	300.55	2091.75	4386.92	1-11	0
1	10	ELU_SIS_Z	Combination	Max	-32828.88	-60.07	206.69	285.27	2301.36	4991.12	1-12	0
1	11	ELU_SIS_Z	Combination	Max	-32977.32	-95.59	199.49	270.45	2503.20	5358.78	1-13	0
1	12	ELU_SIS_Z	Combination	Max	-33055.39	-40.68	192.13	256.04	2697.13	5663.42	1-14	0
1	13	ELU_SIS_Z	Combination	Max	-33133.50	35.56	184.57	242.03	2883.01	5806.67	1-15	0
1	14	ELU_SIS_Z	Combination	Max	-33211.63	163.64	176.79	228.39	3060.65	5787.24	1-16	0
1	15	ELU_SIS_Z	Combination	Max	-33352.79	236.30	168.76	215.11	3229.84	5530.90	1-17	0
1	16	ELU_SIS_Z	Combination	Max	-33408.13	309.45	160.46	202.18	3390.34	5200.57	1-18	0
1	17	ELU_SIS_Z	Combination	Max	-33457.42	385.30	151.89	189.60	3541.92	4834.79	1-19	0
1	18	ELU_SIS_Z	Combination	Max	-33394.21	276.79	143.05	177.39	3684.29	4410.00	1-20	0
1	19	ELU_SIS_Z	Combination	Max	-33312.86	354.90	133.92	165.57	3817.19	4087.41	1-21	0
1	20	ELU_SIS_Z	Combination	Max	-33231.03	431.24	124.54	154.24	3940.33	3725.76	1-22	0
1	21	ELU_SIS_Z	Combination	Max	-33148.51	504.69	114.92	143.50	4053.41	3326.91	1-23	0
1	22	ELU_SIS_Z	Combination	Max	-32970.42	395.25	105.11	133.62	4156.15	2887.54	1-24	0
1	23	ELU_SIS_Z	Combination	Max	-32884.91	461.76	95.16	125.06	4248.26	2463.59	1-25	0
1	24	ELU_SIS_Z	Combination	Max	-32798.25	524.31	85.15	118.61	4329.46	2015.12	1-26	0
1	25	ELU_SIS_Z	Combination	Max	-32612.58	408.10	75.23	115.18	4399.48	1542.04	1-27	0
1	26	ELU_SIS_Z	Combination	Max	-32522.56	464.70	65.60	115.07	4458.05	1742.61	1-28	0
1	27	ELU_SIS_Z	Combination	Max	-32428.92	518.13	56.60	117.65	4504.94	2672.81	1-29	0
1	28	ELU_SIS_Z	Combination	Max	-32225.83	398.29	48.79	122.10	4539.92	3618.30	1-30	0
1	29	ELU_SIS_Z	Combination	Max	-32116.99	447.08	43.05	127.87	4562.77	4713.27	1-31	0
1	30	ELU_SIS_Z	Combination	Max	-32022.79	1203.87	40.45	134.62	4573.33	5796.33	1-32	0
1	31	ELU_SIS_Z	Combination	Max	-31873.96	1958.55	41.77	142.19	4571.43	6073.27	1-33	0
1	32	ELU_SIS_Z	Combination	Max	-31561.06	3245.51	46.78	151.98	4556.93	5723.35	1-34	0
1	33	ELU_SIS_Z	Combination	Max	-31388.14	3981.99	54.40	162.61	4529.74	5480.93	1-35	0
1	33.75	ELU_SIS_Z	Combination	Max	-31206.47	4705.01	63.61	170.59	4499.89	3929.20	1-36	0
1	34.5	ELU_SIS_Z	Combination	Max	-31206.47	-2990.71	63.56	292.85	4460.68	1747.47	1-37	0
1	35.25	ELU_SIS_Z	Combination	Max	-31388.14	-2283.68	54.36	273.18	4499.84	3823.09	1-38	0
1	36	ELU_SIS_Z	Combination	Max	-31561.05	-1572.11	46.77	258.95	4529.63	4217.46	1-39	0
1	37	ELU_SIS_Z	Combination	Max	-31873.95	-313.44	41.79	234.01	4556.75	5810.69	1-40	0
1	38	ELU_SIS_Z	Combination	Max	-32022.79	411.71	40.50	216.26	4571.18	6239.08	1-41	0
1	39	ELU_SIS_Z	Combination	Max	-32116.98	1132.33	43.11	199.31	4573.02	5852.97	1-42	0
1	40	ELU_SIS_Z	Combination	Max	-32225.81	1137.37	48.85	183.36	4562.41	4736.60	1-43	0
1	41	ELU_SIS_Z	Combination	Max	-32428.90	965.64	56.66	168.73	4539.49	3595.11	1-44	0
1	42	ELU_SIS_Z	Combination	Max	-32522.54	958.75	65.64	155.95	4504.47	2624.32	1-45	0
1	43	ELU_SIS_Z	Combination	Max	-32612.56	946.29	75.26	145.85	4457.53	1728.82	1-46	0
1	44	ELU_SIS_Z	Combination	Max	-32798.23	751.83	85.17	139.06	4398.92	1458.67	1-47	0
1	45	ELU_SIS_Z	Combination	Max	-32884.89	726.38	95.17	135.28	4328.87	1940.65	1-48	0
1	46	ELU_SIS_Z	Combination	Max	-32970.41	694.66	105.11	133.61	4247.65	2427.44	1-49	0
1	47	ELU_SIS_Z	Combination	Max	-33148.50	476.80	114.92	133.27	4155.52	2757.28	1-50	0
1	48	ELU_SIS_Z	Combination	Max	-33231.03	432.28	124.52	133.79	4052.76	3230.67	1-51	0
1	49	ELU_SIS_Z	Combination	Max	-33312.86	382.67	133.90	134.92	3939.68	3670.58	1-52	0
1	50	ELU_SIS_Z	Combination	Max	-33394.21	329.12	143.01	136.53	3816.54	4074.16	1-53	0
1	51	ELU_SIS_Z	Combination	Max	-33457.42	86.15	151.85	138.54	3683.65	4394.71	1-54	0

ESTRUCTURA E1. ESFUERZOS EN TABLERO PARA TODOS LOS CASOS E HIPOTESIS DE CARGA

Frame	Station	OutputCase	CaseType	StepType	P	V2	V3	T	M2	M3	FrameElem	ElemStation
Text	m	Text	Text	Text	KN	KN	KN	KN-m	KN-m	KN-m	Text	m
1	52	ELU_SIS_Z	Combination	Max	-33408.13	28.27	160.41	140.92	3541.29	4842.74	1-55	0
1	53	ELU_SIS_Z	Combination	Max	-33352.79	-26.13	168.69	143.65	3389.74	5256.55	1-56	0
1	54	ELU_SIS_Z	Combination	Max	-33211.63	-61.00	176.72	146.73	3229.26	5605.88	1-57	0
1	55	ELU_SIS_Z	Combination	Max	-33133.50	26.83	184.49	150.16	3060.10	5806.66	1-58	0
1	56	ELU_SIS_Z	Combination	Max	-33055.40	167.26	192.04	153.97	2882.50	5843.78	1-59	0
1	57	ELU_SIS_Z	Combination	Max	-32977.33	329.76	199.40	158.18	2696.66	5717.92	1-60	0
1	58	ELU_SIS_Z	Combination	Max	-32828.90	410.59	206.60	162.81	2502.77	5440.40	1-61	0
1	59	ELU_SIS_Z	Combination	Max	-32751.11	578.24	213.68	167.89	2300.98	5010.33	1-62	0
1	60	ELU_SIS_Z	Combination	Max	-32673.70	743.98	220.69	173.45	2091.41	4422.70	1-63	0
1	61	ELU_SIS_Z	Combination	Max	-32525.72	821.67	227.68	179.54	1874.15	3672.98	1-64	0
1	62	ELU_SIS_Z	Combination	Max	-32449.15	980.69	234.71	186.19	1649.24	2796.90	1-65	0
1	63	ELU_SIS_Z	Combination	Max	-32373.14	1135.03	241.82	193.44	1416.68	1774.48	1-66	0
1	64	ELU_SIS_Z	Combination	Max	-32297.68	1284.13	249.10	201.33	1176.44	610.75	1-67	0
1	65	ELU_SIS_Z	Combination	Max	-32151.12	1344.45	256.58	209.90	928.44	-700.84	1-68	0
1	66	ELU_SIS_Z	Combination	Max	-32076.44	1482.10	264.35	219.19	672.54	-2111.93	1-69	0
1	67	ELU_SIS_Z	Combination	Max	-32002.44	1610.82	270.99	238.01	408.58	-2438.98	1-70	0
1	67.5	ELU_SIS_Z	Combination	Max	-31927.48	1666.26	280.65	265.68	273.19	-1071.53	1-71	0
1	68.5	ELU_SIS_Z	Combination	Max	6.99	-147.18	6.36	11.76	3.18	-29.37	1-72	0
1	0	ELU_SIS_Z	Combination	Min	-6.99	-11.11	-6.35	-5.01	0.00	-5.51	1-1	0
1	0.5	ELU_SIS_Z	Combination	Min	-32498.32	-1990.74	-280.67	-269.08	-7.92	-3382.82	1-2	0
1	1.5	ELU_SIS_Z	Combination	Min	-32567.24	-1736.13	-271.02	-238.09	-273.18	-5051.78	1-3	0
1	2	ELU_SIS_Z	Combination	Min	-32636.90	-1681.79	-264.38	-222.37	-408.60	-6082.81	1-4	0
1	3	ELU_SIS_Z	Combination	Min	-32705.66	-1543.84	-256.62	-212.70	-672.66	-5728.47	1-5	0
1	4	ELU_SIS_Z	Combination	Min	-32845.30	-1483.21	-249.14	-203.69	-928.66	-5499.94	1-6	0
1	5	ELU_SIS_Z	Combination	Min	-32912.60	-1333.82	-241.87	-195.36	-1176.77	-5264.26	1-7	0
1	6	ELU_SIS_Z	Combination	Min	-32979.13	-1179.18	-234.75	-187.67	-1417.12	-5083.02	1-8	0
1	7	ELU_SIS_Z	Combination	Min	-33044.85	-1019.86	-227.72	-180.58	-1649.78	-4954.31	1-9	0
1	8	ELU_SIS_Z	Combination	Min	-33180.68	-941.88	-220.73	-174.05	-1874.81	-4935.57	1-10	0
1	9	ELU_SIS_Z	Combination	Min	-33244.76	-775.84	-213.72	-168.04	-2092.18	-4874.61	1-11	0
1	10	ELU_SIS_Z	Combination	Min	-33308.22	-607.90	-206.63	-162.52	-2301.86	-4844.42	1-12	0
1	11	ELU_SIS_Z	Combination	Min	-33441.58	-526.80	-199.43	-157.44	-2503.76	-4921.73	1-13	0
1	12	ELU_SIS_Z	Combination	Min	-33504.04	-364.02	-192.06	-152.79	-2697.76	-4928.59	1-14	0
1	13	ELU_SIS_Z	Combination	Min	-33566.22	-223.31	-184.51	-148.53	-2883.70	-4955.19	1-15	0
1	14	ELU_SIS_Z	Combination	Min	-33628.14	-135.20	-176.72	-144.64	-3061.40	-4995.89	1-16	0
1	15	ELU_SIS_Z	Combination	Min	-33752.70	-169.79	-168.70	-141.11	-3230.65	-5134.15	1-17	0
1	16	ELU_SIS_Z	Combination	Min	-33790.80	-223.93	-160.40	-137.92	-3391.22	-5195.58	1-18	0
1	17	ELU_SIS_Z	Combination	Min	-33821.97	-281.55	-151.83	-135.09	-3542.85	-5133.59	1-19	0
1	18	ELU_SIS_Z	Combination	Min	-33739.59	-524.27	-142.98	-132.63	-3685.29	-4991.37	1-20	0
1	19	ELU_SIS_Z	Combination	Min	-33638.08	-577.57	-133.86	-130.56	-3818.25	-4603.24	1-21	0
1	20	ELU_SIS_Z	Combination	Min	-33535.42	-626.94	-124.48	-128.98	-3941.45	-4121.09	1-22	0
1	21	ELU_SIS_Z	Combination	Min	-33431.86	-671.22	-114.86	-127.99	-4054.60	-3541.74	1-23	0
1	22	ELU_SIS_Z	Combination	Min	-33232.99	-888.85	-105.05	-127.86	-4157.40	-2881.25	1-24	0
1	23	ELU_SIS_Z	Combination	Min	-33127.32	-920.34	-95.09	-129.05	-4249.57	-2096.68	1-25	0
1	24	ELU_SIS_Z	Combination	Min	-33021.23	-945.58	-85.09	-132.35	-4330.83	-1241.47	1-26	0
1	25	ELU_SIS_Z	Combination	Min	-32816.94	-1139.84	-75.17	-138.67	-4400.91	-389.56	1-27	0
1	26	ELU_SIS_Z	Combination	Min	-32709.80	-1152.10	-65.54	-148.31	-4459.55	-42.67	1-28	0
1	27	ELU_SIS_Z	Combination	Min	-32604.87	-1158.80	-56.54	-160.64	-4506.50	-398.36	1-29	0
1	28	ELU_SIS_Z	Combination	Min	-32406.68	-1330.35	-48.73	-174.84	-4541.54	-863.69	1-30	0
1	29	ELU_SIS_Z	Combination	Min	-32312.83	-1325.14	-42.98	-190.35	-4564.46	-1276.02	1-31	0
1	30	ELU_SIS_Z	Combination	Min	-32236.20	-604.35	-40.39	-206.86	-4575.08	-1791.07	1-32	0
1	31	ELU_SIS_Z	Combination	Min	-32105.81	120.95	-41.71	-224.18	-4573.24	-3195.51	1-33	0
1	32	ELU_SIS_Z	Combination	Min	-31811.73	1379.76	-46.71	-248.59	-4558.81	-5284.25	1-34	0
1	33	ELU_SIS_Z	Combination	Min	-31657.44	2095.59	-54.34	-268.97	-4531.68	-7325.26	1-35	0
1	33.75	ELU_SIS_Z	Combination	Min	-31494.22	2802.72	-63.55	-281.83	-4501.88	-10248.94	1-36	0
1	34.5	ELU_SIS_Z	Combination	Min	-31494.22	-4900.86	-63.62	-171.87	-4462.72	-11842.93	1-37	0
1	35.25	ELU_SIS_Z	Combination	Min	-31657.44	-4173.77	-54.42	-161.95	-4501.83	-10367.54	1-38	0
1	36	ELU_SIS_Z	Combination	Min	-31811.73	-3445.24	-46.83	-152.59	-4531.57	-8605.66	1-39	0
1	37	ELU_SIS_Z	Combination	Min	-32105.81	-2158.13	-41.85	-142.28	-4558.63	-5216.41	1-40	0
1	38	ELU_SIS_Z	Combination	Min	-32236.20	-1403.29	-40.56	-134.27	-4573.00	-3038.34	1-41	0
1	39	ELU_SIS_Z	Combination	Min	-32312.84	-646.34	-43.17	-127.08	-4574.77	-1731.66	1-42	0
1	40	ELU_SIS_Z	Combination	Min	-32406.69	-597.38	-48.92	-120.88	-4564.09	-1249.95	1-43	0
1	41	ELU_SIS_Z	Combination	Min	-32604.89	-717.04	-56.72	-115.99	-4541.12	-880.02	1-44	0
1	42	ELU_SIS_Z	Combination	Min	-32709.82	-663.42	-65.71	-112.96	-4506.03	-437.03	1-45	0
1	43	ELU_SIS_Z	Combination	Min	-32816.96	-606.62	-75.33	-112.61	-4459.04	-44.56	1-46	0
1	44	ELU_SIS_Z	Combination	Min	-33021.25	-722.63	-85.24	-115.57	-4400.36	-467.81	1-47	0
1	45	ELU_SIS_Z	Combination	Min	-33127.33	-659.86	-95.23	-121.54	-4330.25	-1319.22	1-48	0
1	46	ELU_SIS_Z	Combination	Min	-33233.00	-593.14	-105.17	-129.63	-4248.96	-2127.62	1-49	0
1	47	ELU_SIS_Z	Combination	Min	-33431.86	-702.34	-114.98	-139.04	-4156.77	-3001.66	1-50	0
1	48	ELU_SIS_Z	Combination	Min	-33535.43	-628.66	-124.59	-149.30	-4053.95	-3633.39	1-51	0
1	49	ELU_SIS_Z	Combination	Min	-33638.08	-552.08	-133.96	-160.18	-3940.80	-4163.83	1-52	0
1	50	ELU_SIS_Z	Combination	Min	-33739.59	-473.72	-143.07	-171.54	-3817.60	-4614.13	1-53	0
1	51	ELU_SIS_Z	Combination	Min	-33821.97	-581.98	-151.91	-183.30	-3684.65	-5003.34	1-54	0
1	52	ELU_SIS_Z	Combination	Min	-33790.80	-505.87	-160.47	-195.42	-3542.23	-5123.35	1-55	0
1	53	ELU_SIS_Z	Combination	Min	-33752.70	-432.46	-168.76	-207.90	-3390.61	-5126.37	1-56	0
1	54	ELU_SIS_Z	Combination	Min	-33628.14	-359.53	-176.78	-220.73	-3230.07	-5042.04	1-57	0
1	55	ELU_SIS_Z	Combination	Min	-33566.22	-231.16	-184.55	-233.92	-3060.85	-4962.49	1-58	0
1	56	ELU_SIS_Z	Combination	Min	-33504.04	-154.65	-192.10	-247.48	-2883.18	-4904.30	1-59	0
1	57	ELU_SIS_Z	Combination	Min	-33441.56	-99.46	-199.46	-261.44	-2697.28	-4855.52	1-60	0
1	58	ELU_SIS_Z	Combination	Min	-33308.21	-134.70	-206.66	-275.82	-2503.33	-4829.77	1-61	0
1	59	ELU_SIS_Z	Combination	Min	-33244.74	-82.39	-213.74	-290.64	-2301.48	-4808.12	1-62	0
1	60	ELU_SIS_Z	Combination	Min	-33180.66	-27.41	-220.75	-305.96	-2091.85	-4827.00	1-63	0

ESTRUCTURA E1. ESFUERZOS EN TABLERO PARA TODOS LOS CASOS E HIPOTESIS DE CARGA

Frame	Station	OutputCase	CaseType	StepType	P	V2	V3	T	M2	M3	FrameElem	ElemStation
Text	m	Text	Text	Text	KN	KN	KN	KN-m	KN-m	KN-m	Text	m
1	61	ELU_SIS_Z	Combination	Min	-33044.84	-53.56	-227.74	-321.80	-1874.52	-4821.73	1-64	0
1	62	ELU_SIS_Z	Combination	Min	-32979.12	10.32	-234.77	-338.19	-1649.55	-4949.63	1-65	0
1	63	ELU_SIS_Z	Combination	Min	-32912.61	79.65	-241.89	-355.19	-1416.93	-5051.97	1-66	0
1	64	ELU_SIS_Z	Combination	Min	-32845.31	154.98	-249.16	-372.83	-1176.63	-5215.17	1-67	0
1	65	ELU_SIS_Z	Combination	Min	-32705.67	153.76	-256.65	-391.15	-928.56	-5448.24	1-68	0
1	66	ELU_SIS_Z	Combination	Min	-32636.92	242.86	-264.41	-410.19	-672.60	-5716.21	1-69	0
1	67	ELU_SIS_Z	Combination	Min	-32567.25	341.67	-271.05	-438.77	-408.57	-4831.39	1-70	0
1	67.5	ELU_SIS_Z	Combination	Min	-32498.33	373.08	-280.71	-466.44	-273.16	-2804.36	1-71	0
1	68.5	ELU_SIS_Z	Combination	Min	-6.99	-173.38	-6.36	-6.89	-3.18	-51.25	1-72	0
1	0	FREC_02	Combination	Max	0.00	0.00	0.00	0.00	0.00	0.00	1-1	0
1	0.5	FREC_02	Combination	Max	-35415.02	-992.19	0.27	1086.74	0.44	-3408.11	1-2	0
1	1.5	FREC_02	Combination	Max	-35494.15	-765.65	0.27	1063.78	0.50	-3818.64	1-3	0
1	2	FREC_02	Combination	Max	-35573.16	-730.85	0.27	1035.82	0.54	-4271.29	1-4	0
1	3	FREC_02	Combination	Max	-35652.05	-629.69	0.27	1010.72	0.61	-2555.57	1-5	0
1	4	FREC_02	Combination	Max	-35809.46	-620.74	0.27	985.53	0.69	-1034.57	1-6	0
1	5	FREC_02	Combination	Max	-35887.98	-512.98	0.27	960.93	0.76	416.78	1-7	0
1	6	FREC_02	Combination	Max	-35966.37	-386.12	0.27	936.39	0.84	1716.02	1-8	0
1	7	FREC_02	Combination	Max	-36044.63	-259.79	0.27	911.84	0.91	2864.53	1-9	0
1	8	FREC_02	Combination	Max	-36200.71	-227.85	0.27	887.29	0.99	3796.83	1-10	0
1	9	FREC_02	Combination	Max	-36278.54	-103.03	0.27	862.75	1.06	4666.71	1-11	0
1	10	FREC_02	Combination	Max	-36356.23	21.19	0.27	838.20	1.14	5390.95	1-12	0
1	11	FREC_02	Combination	Max	-36511.21	49.26	0.27	813.65	1.21	5884.13	1-13	0
1	12	FREC_02	Combination	Max	-36588.51	171.75	0.27	789.10	1.29	6341.85	1-14	0
1	13	FREC_02	Combination	Max	-36665.67	293.53	0.27	764.56	1.36	6660.04	1-15	0
1	14	FREC_02	Combination	Max	-36742.69	414.60	0.27	740.01	1.44	6840.87	1-16	0
1	15	FREC_02	Combination	Max	-36888.84	437.35	0.27	715.46	1.51	6805.73	1-17	0
1	16	FREC_02	Combination	Max	-36940.23	458.99	0.27	690.92	1.59	6736.27	1-18	0
1	17	FREC_02	Combination	Max	-36984.48	485.86	0.27	666.37	1.66	6692.76	1-19	0
1	18	FREC_02	Combination	Max	-36904.41	309.10	0.27	641.82	1.74	6633.29	1-20	0
1	19	FREC_02	Combination	Max	-36803.84	338.71	0.27	617.27	1.81	6734.62	1-21	0
1	20	FREC_02	Combination	Max	-36702.37	369.02	0.27	592.73	1.89	6840.31	1-22	0
1	21	FREC_02	Combination	Max	-36600.02	400.02	0.27	568.18	1.96	6950.30	1-23	0
1	22	FREC_02	Combination	Max	-36392.69	234.54	0.27	543.63	2.03	7057.84	1-24	0
1	23	FREC_02	Combination	Max	-36287.54	267.64	0.27	519.09	2.11	7220.22	1-25	0
1	24	FREC_02	Combination	Max	-36181.53	301.41	0.27	494.54	2.18	7386.37	1-26	0
1	25	FREC_02	Combination	Max	-35967.05	143.26	0.27	469.99	2.26	7524.78	1-27	0
1	26	FREC_02	Combination	Max	-35858.62	179.60	0.27	445.45	2.33	7739.65	1-28	0
1	27	FREC_02	Combination	Max	-35749.41	216.56	0.27	420.90	2.41	7958.15	1-29	0
1	28	FREC_02	Combination	Max	-35528.70	66.84	0.27	396.35	2.48	8116.45	1-30	0
1	29	FREC_02	Combination	Max	-35417.22	106.33	0.27	371.80	2.56	8380.88	1-31	0
1	30	FREC_02	Combination	Max	-35323.26	928.02	0.27	347.26	2.63	8579.64	1-32	0
1	31	FREC_02	Combination	Max	-35169.69	1750.22	0.27	322.71	2.71	7849.30	1-33	0
1	32	FREC_02	Combination	Max	-34835.85	3155.61	0.27	299.99	2.78	6397.52	1-34	0
1	33	FREC_02	Combination	Max	-34655.89	3960.90	0.27	283.91	2.86	5045.29	1-35	0
1	33.75	FREC_02	Combination	Max	-34466.20	4751.75	0.27	287.68	2.92	2510.75	1-36	0
1	34.5	FREC_02	Combination	Max	-34466.20	-3747.19	0.09	964.90	2.96	-473.37	1-37	0
1	35.25	FREC_02	Combination	Max	-34655.89	-2981.57	0.09	939.64	2.90	2382.89	1-38	0
1	36	FREC_02	Combination	Max	-34835.85	-2210.48	0.09	911.68	2.84	3638.49	1-39	0
1	37	FREC_02	Combination	Max	-35169.69	-829.05	0.09	885.69	2.75	6476.96	1-40	0
1	38	FREC_02	Combination	Max	-35323.26	-26.32	0.09	860.90	2.67	8014.05	1-41	0
1	39	FREC_02	Combination	Max	-35417.22	776.00	0.09	836.30	2.60	8624.65	1-42	0
1	40	FREC_02	Combination	Max	-35528.70	796.24	0.09	811.76	2.53	8390.41	1-43	0
1	41	FREC_02	Combination	Max	-35749.40	627.39	0.09	787.21	2.45	8075.99	1-44	0
1	42	FREC_02	Combination	Max	-35858.62	645.34	0.09	762.66	2.38	7890.86	1-45	0
1	43	FREC_02	Combination	Max	-35967.05	662.79	0.09	738.11	2.30	7711.44	1-46	0
1	44	FREC_02	Combination	Max	-36181.53	485.88	0.09	713.57	2.23	7416.61	1-47	0
1	45	FREC_02	Combination	Max	-36287.54	501.00	0.09	689.02	2.16	7288.44	1-48	0
1	46	FREC_02	Combination	Max	-36392.69	515.58	0.09	664.47	2.08	7165.77	1-49	0
1	47	FREC_02	Combination	Max	-36600.02	331.70	0.09	639.93	2.01	6901.66	1-50	0
1	48	FREC_02	Combination	Max	-36702.37	344.43	0.09	615.38	1.94	6833.76	1-51	0
1	49	FREC_02	Combination	Max	-36803.84	356.58	0.09	590.83	1.86	6771.56	1-52	0
1	50	FREC_02	Combination	Max	-36904.41	368.15	0.09	566.28	1.79	6714.98	1-53	0
1	51	FREC_02	Combination	Max	-36984.48	173.48	0.09	541.74	1.71	6614.71	1-54	0
1	52	FREC_02	Combination	Max	-36940.23	190.52	0.09	517.19	1.64	6703.36	1-55	0
1	53	FREC_02	Combination	Max	-36888.84	216.35	0.09	492.64	1.57	6804.96	1-56	0
1	54	FREC_02	Combination	Max	-36742.69	253.15	0.09	468.09	1.49	6899.25	1-57	0
1	55	FREC_02	Combination	Max	-36665.67	388.38	0.09	443.55	1.42	6877.45	1-58	0
1	56	FREC_02	Combination	Max	-36588.51	524.47	0.09	419.00	1.34	6720.46	1-59	0
1	57	FREC_02	Combination	Max	-36511.21	661.37	0.09	394.45	1.27	6425.98	1-60	0
1	58	FREC_02	Combination	Max	-36356.23	703.98	0.09	369.91	1.20	6002.87	1-61	0
1	59	FREC_02	Combination	Max	-36278.54	842.85	0.09	345.36	1.12	5445.99	1-62	0
1	60	FREC_02	Combination	Max	-36200.71	982.46	0.09	320.81	1.05	4745.11	1-63	0
1	61	FREC_02	Combination	Max	-36044.63	1029.30	0.09	296.26	0.98	3889.85	1-64	0
1	62	FREC_02	Combination	Max	-35966.37	1170.65	0.09	271.72	0.90	2913.61	1-65	0
1	63	FREC_02	Combination	Max	-35887.98	1312.66	0.09	247.17	0.83	1787.87	1-66	0
1	64	FREC_02	Combination	Max	-35809.46	1455.29	0.09	222.62	0.75	511.16	1-67	0
1	65	FREC_02	Combination	Max	-35652.05	1507.16	0.09	198.08	0.68	-931.21	1-68	0
1	66	FREC_02	Combination	Max	-35573.16	1651.38	0.09	177.50	0.61	-2492.22	1-69	0
1	67	FREC_02	Combination	Max	-35494.15	1796.15	0.09	154.28	0.53	-2872.47	1-70	0
1	67.5	FREC_02	Combination	Max	-35415.02	1866.74	0.09	158.06	0.50	-1388.05	1-71	0
1	68.5	FREC_02	Combination	Max	0.00	-158.31	0.00	562.50	0.00	-39.58	1-72	0

ESTRUCTURA E1. ESFUERZOS EN TABLERO PARA TODOS LOS CASOS E HIPOTESIS DE CARGA

Frame	Station	OutputCase	CaseType	StepType	P	V2	V3	T	M2	M3	FrameElem	ElemStation
Text	m	Text	Text	Text	KN	KN	KN	KN-m	KN-m	KN-m	Text	m
1	0	FREC_02	Combination	Min	0.00	0.00	0.00	0.00	0.00	0.00	1-1	0
1	0.5	FREC_02	Combination	Min	-35430.93	-2232.12	-0.09	-156.26	-0.06	-3604.21	1-2	0
1	1.5	FREC_02	Combination	Min	-35510.07	-1962.27	-0.09	-157.16	-0.24	-5128.04	1-3	0
1	2	FREC_02	Combination	Min	-35589.08	-1892.09	-0.09	-153.43	-0.38	-6052.84	1-4	0
1	3	FREC_02	Combination	Min	-35667.97	-1747.73	-0.09	-173.85	-0.65	-5392.19	1-5	0
1	4	FREC_02	Combination	Min	-35825.38	-1695.69	-0.09	-193.58	-0.91	-4913.71	1-6	0
1	5	FREC_02	Combination	Min	-35903.90	-1552.85	-0.09	-217.77	-1.18	-4434.48	1-7	0
1	6	FREC_02	Combination	Min	-35982.29	-1410.61	-0.09	-242.31	-1.45	-4034.81	1-8	0
1	7	FREC_02	Combination	Min	-36060.55	-1268.98	-0.09	-266.86	-1.72	-3717.94	1-9	0
1	8	FREC_02	Combination	Min	-36216.63	-1221.83	-0.09	-291.41	-1.99	-3554.05	1-10	0
1	9	FREC_02	Combination	Min	-36294.45	-1081.88	-0.09	-315.95	-2.26	-3377.18	1-11	0
1	10	FREC_02	Combination	Min	-36372.15	-942.63	-0.09	-340.50	-2.53	-3284.52	1-12	0
1	11	FREC_02	Combination	Min	-36527.13	-899.61	-0.09	-365.05	-2.79	-3354.53	1-13	0
1	12	FREC_02	Combination	Min	-36604.43	-762.26	-0.09	-389.60	-3.06	-3394.80	1-14	0
1	13	FREC_02	Combination	Min	-36681.59	-625.70	-0.09	-414.14	-3.33	-3516.69	1-15	0
1	14	FREC_02	Combination	Min	-36758.61	-489.94	-0.09	-438.69	-3.60	-3714.45	1-16	0
1	15	FREC_02	Combination	Min	-36904.75	-452.59	-0.09	-463.24	-3.87	-4064.21	1-17	0
1	16	FREC_02	Combination	Min	-36956.15	-426.17	-0.09	-487.78	-4.14	-4394.97	1-18	0
1	17	FREC_02	Combination	Min	-37000.40	-400.68	-0.09	-512.33	-4.41	-4655.28	1-19	0
1	18	FREC_02	Combination	Min	-36920.32	-586.73	-0.09	-536.88	-4.68	-4875.96	1-20	0
1	19	FREC_02	Combination	Min	-36819.75	-574.47	-0.09	-561.43	-4.94	-4884.64	1-21	0
1	20	FREC_02	Combination	Min	-36718.29	-561.59	-0.09	-585.97	-5.21	-4883.78	1-22	0
1	21	FREC_02	Combination	Min	-36615.94	-548.11	-0.09	-610.52	-5.48	-4724.57	1-23	0
1	22	FREC_02	Combination	Min	-36408.61	-731.19	-0.09	-635.07	-5.75	-4580.01	1-24	0
1	23	FREC_02	Combination	Min	-36303.46	-715.78	-0.09	-659.61	-6.02	-4330.17	1-25	0
1	24	FREC_02	Combination	Min	-36197.45	-699.80	-0.09	-684.16	-6.29	-4033.62	1-26	0
1	25	FREC_02	Combination	Min	-35982.97	-875.81	-0.09	-708.71	-6.56	-3724.46	1-27	0
1	26	FREC_02	Combination	Min	-35874.54	-857.43	-0.09	-733.25	-6.82	-3301.19	1-28	0
1	27	FREC_02	Combination	Min	-35765.32	-838.51	-0.09	-757.80	-7.09	-2839.50	1-29	0
1	28	FREC_02	Combination	Min	-35544.62	-1006.36	-0.09	-782.35	-7.36	-2406.15	1-30	0
1	29	FREC_02	Combination	Min	-35433.14	-985.07	-0.09	-806.90	-7.63	-1837.88	1-31	0
1	30	FREC_02	Combination	Min	-35339.18	-181.68	-0.09	-831.44	-7.90	-1309.65	1-32	0
1	31	FREC_02	Combination	Min	-35185.61	622.13	-0.09	-855.99	-8.17	-1867.78	1-33	0
1	32	FREC_02	Combination	Min	-34851.77	2009.05	-0.09	-880.78	-8.44	-3201.50	1-34	0
1	33	FREC_02	Combination	Min	-34671.81	2790.88	-0.09	-906.45	-8.71	-4442.84	1-35	0
1	33.75	FREC_02	Combination	Min	-34482.12	3556.50	-0.09	-934.77	-8.91	-6884.83	1-36	0
1	34.5	FREC_02	Combination	Min	-34482.12	-4966.40	-0.27	-279.81	-9.11	-10038.56	1-37	0
1	35.25	FREC_02	Combination	Min	-34671.81	-4176.64	-0.27	-285.54	-8.90	-7069.73	1-38	0
1	36	FREC_02	Combination	Min	-34851.77	-3380.49	-0.27	-281.80	-8.70	-5841.90	1-39	0
1	37	FREC_02	Combination	Min	-35185.61	-1976.14	-0.27	-295.49	-8.43	-3113.89	1-40	0
1	38	FREC_02	Combination	Min	-35339.18	-1154.94	-0.27	-318.21	-8.16	-1691.23	1-41	0
1	39	FREC_02	Combination	Min	-35433.14	-334.21	-0.27	-342.40	-7.90	-1249.72	1-42	0
1	40	FREC_02	Combination	Min	-35544.62	-295.65	-0.27	-366.94	-7.63	-1811.81	1-43	0
1	41	FREC_02	Combination	Min	-35765.33	-446.27	-0.27	-391.49	-7.36	-2421.94	1-44	0
1	42	FREC_02	Combination	Min	-35874.54	-410.18	-0.27	-416.04	-7.09	-2884.45	1-45	0
1	43	FREC_02	Combination	Min	-35982.98	-374.67	-0.27	-440.59	-6.82	-3318.84	1-46	0
1	44	FREC_02	Combination	Min	-36197.45	-533.61	-0.27	-465.13	-6.55	-3814.27	1-47	0
1	45	FREC_02	Combination	Min	-36303.47	-500.61	-0.27	-489.68	-6.28	-4111.82	1-48	0
1	46	FREC_02	Combination	Min	-36408.61	-468.23	-0.27	-514.23	-6.02	-4362.90	1-49	0
1	47	FREC_02	Combination	Min	-36615.94	-634.40	-0.27	-538.77	-5.75	-4724.87	1-50	0
1	48	FREC_02	Combination	Min	-36718.29	-604.05	-0.27	-563.32	-5.48	-4834.55	1-51	0
1	49	FREC_02	Combination	Min	-36819.76	-574.36	-0.27	-587.87	-5.21	-4894.09	1-52	0
1	50	FREC_02	Combination	Min	-36920.33	-545.34	-0.27	-612.42	-4.94	-4894.27	1-53	0
1	51	FREC_02	Combination	Min	-37000.41	-722.65	-0.27	-636.96	-4.67	-4888.27	1-54	0
1	52	FREC_02	Combination	Min	-36956.15	-696.30	-0.27	-661.51	-4.40	-4641.44	1-55	0
1	53	FREC_02	Combination	Min	-36904.76	-669.08	-0.27	-686.06	-4.14	-4324.74	1-56	0
1	54	FREC_02	Combination	Min	-36758.61	-637.04	-0.27	-710.60	-3.87	-3972.55	1-57	0
1	55	FREC_02	Combination	Min	-36681.59	-516.39	-0.27	-735.15	-3.60	-3684.38	1-58	0
1	56	FREC_02	Combination	Min	-36604.43	-394.98	-0.27	-759.70	-3.33	-3470.68	1-59	0
1	57	FREC_02	Combination	Min	-36527.13	-272.83	-0.27	-784.25	-3.06	-3334.19	1-60	0
1	58	FREC_02	Combination	Min	-36372.15	-245.07	-0.27	-808.79	-2.79	-3257.62	1-61	0
1	59	FREC_02	Combination	Min	-36294.46	-121.13	-0.27	-833.34	-2.53	-3254.81	1-62	0
1	60	FREC_02	Combination	Min	-36216.64	3.46	-0.27	-857.89	-2.26	-3328.78	1-63	0
1	61	FREC_02	Combination	Min	-36060.55	35.20	-0.27	-882.43	-1.99	-3494.83	1-64	0
1	62	FREC_02	Combination	Min	-35982.29	161.35	-0.27	-906.98	-1.72	-3703.61	1-65	0
1	63	FREC_02	Combination	Min	-35903.90	288.08	-0.27	-931.53	-1.45	-4008.77	1-66	0
1	64	FREC_02	Combination	Min	-35825.38	415.34	-0.27	-956.08	-1.18	-4381.07	1-67	0
1	65	FREC_02	Combination	Min	-35667.98	437.55	-0.27	-980.62	-0.91	-4864.55	1-68	0
1	66	FREC_02	Combination	Min	-35589.09	538.71	-0.27	-1005.70	-0.65	-5395.72	1-69	0
1	67	FREC_02	Combination	Min	-35510.07	640.30	-0.27	-1030.42	-0.38	-4662.81	1-70	0
1	67.5	FREC_02	Combination	Min	-35430.94	675.53	-0.27	-1058.74	-0.24	-2611.39	1-71	0
1	68.5	FREC_02	Combination	Min	0.00	-541.21	0.00	-75.00	0.00	-154.43	1-72	0
1	0	CARACT_02	Combination	Max	0.00	0.00	0.00	0.00	0.00	0.00	1-1	0
1	0.5	CARACT_02	Combination	Max	-35222.49	-838.89	105.28	1463.28	3.15	-3233.77	1-2	0
1	1.5	CARACT_02	Combination	Max	-35309.54	-672.36	101.51	1425.66	-99.80	-3052.93	1-3	0
1	2	CARACT_02	Combination	Max	-35392.51	-637.55	99.62	1384.63	-149.85	-3222.16	1-4	0
1	3	CARACT_02	Combination	Max	-35479.32	-536.40	95.85	1351.16	-247.12	-991.93	1-5	0
1	4	CARACT_02	Combination	Max	-35644.65	-527.44	92.07	1317.58	-340.62	1015.86	1-6	0
1	5	CARACT_02	Combination	Max	-35731.09	-417.06	88.30	1284.79	-430.34	2914.11	1-7	0
1	6	CARACT_02	Combination	Max	-35817.40	-281.07	84.52	1252.06	-516.29	4618.64	1-8	0
1	7	CARACT_02	Combination	Max	-35903.58	-145.65	80.75	1219.33	-598.47	6131.02	1-9	0

ESTRUCTURA E1. ESFUERZOS EN TABLERO PARA TODOS LOS CASOS E HIPOTESIS DE CARGA

Frame	Station	OutputCase	CaseType	StepType	P	V2	V3	T	M2	M3	FrameElem	ElemStation
Text	m	Text	Text	Text	KN	KN	KN	KN-m	KN-m	KN-m	Text	m
1	8	CARACT_02	Combination	Max	-36067.58	-104.66	76.98	1186.60	-676.87	7386.01	1-10	0
1	9	CARACT_02	Combination	Max	-36153.33	29.16	73.20	1153.87	-751.50	8537.69	1-11	0
1	10	CARACT_02	Combination	Max	-36238.94	162.30	69.43	1121.14	-822.35	9503.14	1-12	0
1	11	CARACT_02	Combination	Max	-36401.84	199.23	65.65	1088.41	-889.43	10197.31	1-13	0
1	12	CARACT_02	Combination	Max	-36487.06	330.49	61.88	1055.68	-952.74	10816.19	1-14	0
1	13	CARACT_02	Combination	Max	-36572.14	460.95	58.11	1022.95	-1012.27	11256.14	1-15	0
1	14	CARACT_02	Combination	Max	-36657.08	590.58	54.33	990.22	-1068.03	11519.78	1-16	0
1	15	CARACT_02	Combination	Max	-36811.15	621.79	50.56	957.49	-1120.01	11529.04	1-17	0
1	16	CARACT_02	Combination	Max	-36870.46	666.37	46.78	924.76	-1168.22	11466.11	1-18	0
1	17	CARACT_02	Combination	Max	-36922.63	725.14	43.01	892.03	-1212.66	11397.18	1-19	0
1	18	CARACT_02	Combination	Max	-36850.48	580.14	39.24	859.30	-1253.32	11275.35	1-20	0
1	19	CARACT_02	Combination	Max	-36757.82	641.35	35.46	826.57	-1290.21	11277.81	1-21	0
1	20	CARACT_02	Combination	Max	-36664.28	703.10	31.69	793.84	-1323.32	11248.80	1-22	0
1	21	CARACT_02	Combination	Max	-36569.85	765.38	27.91	761.11	-1352.66	11188.97	1-23	0
1	22	CARACT_02	Combination	Max	-36370.44	630.99	24.14	728.38	-1378.23	11092.32	1-24	0
1	23	CARACT_02	Combination	Max	-36273.21	694.99	20.37	695.66	-1400.02	11016.94	1-25	0
1	24	CARACT_02	Combination	Max	-36175.12	759.45	16.59	662.93	-1418.04	10912.59	1-26	0
1	25	CARACT_02	Combination	Max	-35968.56	631.79	12.82	630.20	-1432.28	10749.60	1-27	0
1	26	CARACT_02	Combination	Max	-35868.05	698.40	9.04	597.47	-1442.75	10639.11	1-28	0
1	27	CARACT_02	Combination	Max	-35766.75	765.40	5.27	564.74	-1449.45	10485.20	1-29	0
1	28	CARACT_02	Combination	Max	-35546.18	645.47	1.50	532.01	-1452.37	10252.46	1-30	0
1	29	CARACT_02	Combination	Max	-35426.78	714.52	-2.28	499.28	-1451.52	10111.69	1-31	0
1	30	CARACT_02	Combination	Max	-35324.90	1565.50	-6.05	466.55	-1446.89	9878.29	1-32	0
1	31	CARACT_02	Combination	Max	-35163.41	2416.73	-9.83	433.82	-1438.49	8689.92	1-33	0
1	32	CARACT_02	Combination	Max	-34821.65	3850.86	-13.60	403.53	-1426.32	6755.35	1-34	0
1	33	CARACT_02	Combination	Max	-34633.77	4684.61	-17.38	381.41	-1410.37	4896.09	1-35	0
1	33.75	CARACT_02	Combination	Max	-34438.14	5497.69	-20.21	386.45	-1395.94	1964.65	1-36	0
1	34.5	CARACT_02	Combination	Max	-34432.20	-3764.99	23.51	1283.69	-1379.38	-1341.60	1-37	0
1	35.25	CARACT_02	Combination	Max	-34627.83	-2999.37	20.68	1250.01	-1395.96	1835.36	1-38	0
1	36	CARACT_02	Combination	Max	-34813.73	-2228.27	17.85	1212.07	-1410.40	3487.23	1-39	0
1	37	CARACT_02	Combination	Max	-35155.49	-844.53	14.08	1177.41	-1426.37	6830.99	1-40	0
1	38	CARACT_02	Combination	Max	-35316.98	-37.70	10.30	1144.36	-1438.54	8849.99	1-41	0
1	39	CARACT_02	Combination	Max	-35418.86	769.02	6.53	1111.56	-1446.94	9917.94	1-42	0
1	40	CARACT_02	Combination	Max	-35538.26	793.97	2.75	1078.83	-1451.57	10113.34	1-43	0
1	41	CARACT_02	Combination	Max	-35766.88	630.10	-1.02	1046.10	-1452.42	10205.75	1-44	0
1	42	CARACT_02	Combination	Max	-35875.97	653.33	-4.79	1013.38	-1449.49	10411.46	1-45	0
1	43	CARACT_02	Combination	Max	-35976.48	676.32	-8.57	980.65	-1442.79	10595.38	1-46	0
1	44	CARACT_02	Combination	Max	-36183.04	505.20	-12.34	947.92	-1432.32	10634.00	1-47	0
1	45	CARACT_02	Combination	Max	-36281.13	526.37	-16.12	915.19	-1418.08	10808.45	1-48	0
1	46	CARACT_02	Combination	Max	-36378.36	547.24	-19.89	882.46	-1400.06	10956.65	1-49	0
1	47	CARACT_02	Combination	Max	-36577.77	369.89	-23.66	849.73	-1378.26	10930.78	1-50	0
1	48	CARACT_02	Combination	Max	-36672.20	389.36	-27.44	817.00	-1352.70	11067.67	1-51	0
1	49	CARACT_02	Combination	Max	-36765.74	408.47	-31.21	784.27	-1323.36	11175.99	1-52	0
1	50	CARACT_02	Combination	Max	-36858.40	427.20	-34.99	751.54	-1290.24	11254.94	1-53	0
1	51	CARACT_02	Combination	Max	-36930.55	239.88	-38.76	718.81	-1253.35	11254.48	1-54	0
1	52	CARACT_02	Combination	Max	-36878.38	276.40	-42.53	686.08	-1212.69	11406.53	1-55	0
1	53	CARACT_02	Combination	Max	-36819.06	333.64	-46.31	653.35	-1168.25	11535.10	1-56	0
1	54	CARACT_02	Combination	Max	-36665.00	402.01	-50.08	620.62	-1120.04	11624.03	1-57	0
1	55	CARACT_02	Combination	Max	-36580.06	568.97	-53.86	587.89	-1068.05	11559.06	1-58	0
1	56	CARACT_02	Combination	Max	-36494.98	736.93	-57.63	555.16	-1012.29	11320.56	1-59	0
1	57	CARACT_02	Combination	Max	-36409.76	905.84	-61.40	522.43	-952.76	10905.71	1-60	0
1	58	CARACT_02	Combination	Max	-36246.86	980.58	-65.18	489.70	-889.45	10323.90	1-61	0
1	59	CARACT_02	Combination	Max	-36161.24	1151.70	-68.95	456.97	-822.37	9566.54	1-62	0
1	60	CARACT_02	Combination	Max	-36075.50	1323.66	-72.73	424.24	-751.51	8626.01	1-63	0
1	61	CARACT_02	Combination	Max	-35911.50	1402.96	-76.50	391.51	-676.88	7490.58	1-64	0
1	62	CARACT_02	Combination	Max	-35825.32	1576.85	-80.27	358.78	-598.48	6193.30	1-65	0
1	63	CARACT_02	Combination	Max	-35739.01	1751.47	-84.05	326.05	-516.30	4705.40	1-66	0
1	64	CARACT_02	Combination	Max	-35652.57	1926.78	-87.82	293.32	-430.35	3025.13	1-67	0
1	65	CARACT_02	Combination	Max	-35487.24	2011.39	-91.60	260.60	-340.63	1137.63	1-68	0
1	66	CARACT_02	Combination	Max	-35400.43	2188.40	-95.37	233.16	-247.13	-915.27	1-69	0
1	67	CARACT_02	Combination	Max	-35313.50	2365.99	-99.14	198.45	-149.85	-1830.93	1-70	0
1	67.5	CARACT_02	Combination	Max	-35230.41	2457.59	-101.03	196.49	-99.80	-633.62	1-71	0
1	68.5	CARACT_02	Combination	Max	3.96	-158.31	1.89	750.00	0.47	-39.58	1-72	0
1	0	CARACT_02	Combination	Min	0.00	0.00	0.00	0.00	0.00	0.00	1-1	0
1	0.5	CARACT_02	Combination	Min	-35674.36	-2857.65	104.81	-194.06	2.49	-3883.17	1-2	0
1	1.5	CARACT_02	Combination	Min	-35745.58	-2554.93	101.03	-202.26	-100.79	-5463.62	1-3	0
1	2	CARACT_02	Combination	Min	-35820.63	-2463.74	99.15	-201.04	-151.07	-6429.78	1-4	0
1	3	CARACT_02	Combination	Min	-35891.60	-2286.55	95.37	-228.26	-248.80	-5824.04	1-5	0
1	4	CARACT_02	Combination	Min	-36041.09	-2201.71	91.60	-254.57	-342.75	-5416.55	1-6	0
1	5	CARACT_02	Combination	Min	-36111.69	-2026.13	87.82	-286.81	-432.93	-5014.31	1-7	0
1	6	CARACT_02	Combination	Min	-36182.16	-1851.19	84.05	-319.54	-519.34	-4694.64	1-8	0
1	7	CARACT_02	Combination	Min	-36252.50	-1676.94	80.28	-352.27	-601.98	-4458.77	1-9	0
1	8	CARACT_02	Combination	Min	-36400.66	-1597.23	76.50	-385.00	-680.84	-4368.88	1-10	0
1	9	CARACT_02	Combination	Min	-36470.56	-1424.81	72.73	-417.73	-755.92	-4274.00	1-11	0
1	10	CARACT_02	Combination	Min	-36540.34	-1253.19	68.95	-450.46	-827.24	-4298.34	1-12	0
1	11	CARACT_02	Combination	Min	-36687.40	-1177.89	65.18	-483.19	-894.77	-4406.35	1-13	0
1	12	CARACT_02	Combination	Min	-36756.78	-1008.39	61.41	-515.92	-958.54	-4527.61	1-14	0
1	13	CARACT_02	Combination	Min	-36826.02	-839.79	57.63	-548.65	-1018.53	-4725.49	1-15	0
1	14	CARACT_02	Combination	Min	-36895.12	-672.14	53.86	-581.38	-1074.74	-4999.25	1-16	0
1	15	CARACT_02	Combination	Min	-37033.34	-603.03	50.08	-614.11	-1127.19	-5428.01	1-17	0
1	16	CARACT_02	Combination	Min	-37076.82	-545.01	46.31	-646.84	-1175.85	-5834.76	1-18	0

ESTRUCTURA E1. ESFUERZOS EN TABLERO PARA TODOS LOS CASOS E HIPOTESIS DE CARGA

Frame	Station	OutputCase	CaseType	StepType	P	V2	V3	T	M2	M3	FrameElem	ElemStation
Text	m	Text	Text	Text	KN	KN	KN	KN-m	KN-m	KN-m	Text	m
1	17	CARACT_02	Combination	Min	-37113.15	-488.07	42.54	-679.57	-1220.75	-6174.07	1-19	0
1	18	CARACT_02	Combination	Min	-37025.15	-654.61	38.76	-712.30	-1261.87	-6473.74	1-20	0
1	19	CARACT_02	Combination	Min	-36916.66	-634.96	34.99	-745.03	-1299.22	-6558.42	1-21	0
1	20	CARACT_02	Combination	Min	-36807.28	-614.88	31.21	-777.76	-1332.79	-6586.55	1-22	0
1	21	CARACT_02	Combination	Min	-36697.01	-594.40	27.44	-810.49	-1362.59	-6610.34	1-23	0
1	22	CARACT_02	Combination	Min	-36481.76	-770.69	23.67	-843.22	-1388.61	-6488.77	1-24	0
1	23	CARACT_02	Combination	Min	-36368.69	-748.72	19.89	-875.94	-1410.86	-6316.94	1-25	0
1	24	CARACT_02	Combination	Min	-36254.76	-726.40	16.12	-908.67	-1429.34	-6095.38	1-26	0
1	25	CARACT_02	Combination	Min	-36032.36	-896.31	12.34	-941.40	-1444.04	-5847.21	1-27	0
1	26	CARACT_02	Combination	Min	-35916.01	-872.08	8.57	-974.13	-1454.97	-5522.94	1-28	0
1	27	CARACT_02	Combination	Min	-35798.87	-847.57	4.80	-1006.86	-1462.12	-5138.25	1-29	0
1	28	CARACT_02	Combination	Min	-35578.03	-1010.09	1.02	-1039.59	-1465.50	-4784.31	1-30	0
1	29	CARACT_02	Combination	Min	-35474.48	-983.76	-2.75	-1072.32	-1465.11	-4305.33	1-31	0
1	30	CARACT_02	Combination	Min	-35388.44	-175.62	-6.53	-1105.05	-1460.94	-3874.40	1-32	0
1	31	CARACT_02	Combination	Min	-35242.79	632.66	-10.30	-1137.78	-1453.00	-4800.20	1-33	0
1	32	CARACT_02	Combination	Min	-34916.87	2023.74	-14.07	-1170.83	-1441.28	-6615.17	1-34	0
1	33	CARACT_02	Combination	Min	-34744.83	2807.77	-17.85	-1205.73	-1425.79	-8345.78	1-35	0
1	33.75	CARACT_02	Combination	Min	-34561.07	3573.39	-20.68	-1243.49	-1411.70	-11176.54	1-36	0
1	34.5	CARACT_02	Combination	Min	-34567.02	-5735.06	23.04	-375.91	-1395.48	-14734.72	1-37	0
1	35.25	CARACT_02	Combination	Min	-34750.77	-4923.42	20.21	-383.56	-1411.70	-11301.88	1-38	0
1	36	CARACT_02	Combination	Min	-34924.79	-4105.10	17.38	-379.25	-1425.79	-9748.95	1-39	0
1	37	CARACT_02	Combination	Min	-35250.71	-2672.35	13.60	-397.50	-1441.28	-6574.96	1-40	0
1	38	CARACT_02	Combination	Min	-35396.36	-1822.46	9.83	-427.79	-1452.99	-4627.03	1-41	0
1	39	CARACT_02	Combination	Min	-35482.40	-972.77	6.05	-460.04	-1460.93	-3814.85	1-42	0
1	40	CARACT_02	Combination	Min	-35585.96	-904.97	2.28	-492.77	-1465.10	-4284.63	1-43	0
1	41	CARACT_02	Combination	Min	-35798.74	-1026.09	-1.50	-525.49	-1465.50	-4801.45	1-44	0
1	42	CARACT_02	Combination	Min	-35908.09	-960.24	-5.27	-558.22	-1462.12	-5187.53	1-45	0
1	43	CARACT_02	Combination	Min	-36024.45	-894.74	-9.04	-590.95	-1454.96	-5531.91	1-46	0
1	44	CARACT_02	Combination	Min	-36246.84	-1023.46	-12.82	-623.68	-1444.03	-5952.33	1-47	0
1	45	CARACT_02	Combination	Min	-36360.78	-960.01	-16.59	-656.41	-1429.33	-6178.87	1-48	0
1	46	CARACT_02	Combination	Min	-36473.84	-896.98	-20.37	-689.14	-1410.86	-6354.94	1-49	0
1	47	CARACT_02	Combination	Min	-36689.09	-1032.29	-24.14	-721.87	-1388.61	-6629.90	1-50	0
1	48	CARACT_02	Combination	Min	-36799.36	-970.89	-27.91	-754.60	-1362.58	-6661.57	1-51	0
1	49	CARACT_02	Combination	Min	-36908.75	-909.96	-31.69	-787.33	-1332.78	-6644.09	1-52	0
1	50	CARACT_02	Combination	Min	-37017.24	-849.54	-35.46	-820.06	-1299.21	-6562.27	1-53	0
1	51	CARACT_02	Combination	Min	-37105.24	-995.27	-39.24	-852.79	-1261.87	-6458.26	1-54	0
1	52	CARACT_02	Combination	Min	-37068.90	-937.19	-43.01	-885.52	-1220.75	-6166.42	1-55	0
1	53	CARACT_02	Combination	Min	-37025.43	-878.10	-46.78	-918.25	-1175.85	-5764.71	1-56	0
1	54	CARACT_02	Combination	Min	-36887.20	-823.14	-50.56	-950.98	-1127.18	-5340.50	1-57	0
1	55	CARACT_02	Combination	Min	-36818.10	-694.05	-54.33	-983.71	-1074.74	-4973.33	1-58	0
1	56	CARACT_02	Combination	Min	-36748.86	-564.10	-58.11	-1016.44	-1018.53	-4672.62	1-59	0
1	57	CARACT_02	Combination	Min	-36679.49	-433.30	-61.88	-1049.17	-958.54	-4460.11	1-60	0
1	58	CARACT_02	Combination	Min	-36532.42	-396.78	-65.65	-1081.90	-894.77	-4308.53	1-61	0
1	59	CARACT_02	Combination	Min	-36462.65	-264.01	-69.43	-1114.63	-827.23	-4224.71	1-62	0
1	60	CARACT_02	Combination	Min	-36392.75	-130.51	-73.20	-1147.36	-755.92	-4221.67	1-63	0
1	61	CARACT_02	Combination	Min	-36244.58	-89.79	-76.98	-1180.09	-680.84	-4308.71	1-64	0
1	62	CARACT_02	Combination	Min	-36174.24	45.41	-80.75	-1212.82	-601.98	-4443.48	1-65	0
1	63	CARACT_02	Combination	Min	-36103.77	181.23	-84.52	-1245.55	-519.34	-4661.63	1-66	0
1	64	CARACT_02	Combination	Min	-36033.17	317.61	-88.30	-1278.27	-432.93	-4968.92	1-67	0
1	65	CARACT_02	Combination	Min	-35883.69	344.24	-92.07	-1311.00	-342.75	-5368.39	1-68	0
1	66	CARACT_02	Combination	Min	-35812.72	445.40	-95.85	-1344.44	-248.80	-5870.55	1-69	0
1	67	CARACT_02	Combination	Min	-35741.62	546.99	-99.62	-1381.15	-151.07	-5008.14	1-70	0
1	67.5	CARACT_02	Combination	Min	-35666.45	582.22	-101.51	-1425.91	-100.79	-2915.30	1-71	0
1	68.5	CARACT_02	Combination	Min	-3.96	-678.06	1.89	-100.00	0.47	-195.01	1-72	0
1	0	PERM	Combination	Max	0.00	0.00	0.00	0.00	0.00	0.00	1-1	0
1	0.5	PERM	Combination	Max	-32211.95	-1289.81	0.00	0.00	0.00	-3111.09	1-2	0
1	1.5	PERM	Combination	Max	-32283.89	-1055.08	0.00	0.00	0.00	-4202.71	1-3	0
1	2	PERM	Combination	Max	-32355.72	-1012.05	0.00	0.00	0.00	-4943.88	1-4	0
1	3	PERM	Combination	Max	-32427.44	-902.62	0.00	0.00	0.00	-4030.99	1-5	0
1	4	PERM	Combination	Max	-32570.54	-877.02	0.00	0.00	0.00	-3264.19	1-6	0
1	5	PERM	Combination	Max	-32641.92	-768.75	0.00	0.00	0.00	-2521.64	1-7	0
1	6	PERM	Combination	Max	-32713.18	-660.87	0.00	0.00	0.00	-1878.60	1-8	0
1	7	PERM	Combination	Max	-32784.33	-553.37	0.00	0.00	0.00	-1321.39	1-9	0
1	8	PERM	Combination	Max	-32926.22	-531.55	0.00	0.00	0.00	-919.16	1-10	0
1	9	PERM	Combination	Max	-32996.97	-425.14	0.00	0.00	0.00	-527.88	1-11	0
1	10	PERM	Combination	Max	-33067.60	-319.11	0.00	0.00	0.00	-226.06	1-12	0
1	11	PERM	Combination	Max	-33208.50	-300.27	0.00	0.00	0.00	-92.31	1-13	0
1	12	PERM	Combination	Max	-33278.76	-195.37	0.00	0.00	0.00	50.10	1-14	0
1	13	PERM	Combination	Max	-33348.91	-90.85	0.00	0.00	0.00	105.39	1-15	0
1	14	PERM	Combination	Max	-33418.93	13.30	0.00	0.00	0.00	74.25	1-16	0
1	15	PERM	Combination	Max	-33551.79	28.38	0.00	0.00	0.00	-116.18	1-17	0
1	16	PERM	Combination	Max	-33598.51	33.94	0.00	0.00	0.00	-302.24	1-18	0
1	17	PERM	Combination	Max	-33638.74	39.10	0.00	0.00	0.00	-445.36	1-19	0
1	18	PERM	Combination	Max	-33565.94	-140.46	0.00	0.00	0.00	-569.92	1-20	0
1	19	PERM	Combination	Max	-33474.51	-132.01	0.00	0.00	0.00	-516.49	1-21	0
1	20	PERM	Combination	Max	-33382.27	-122.47	0.00	0.00	0.00	-429.11	1-22	0
1	21	PERM	Combination	Max	-33289.23	-111.84	0.00	0.00	0.00	-309.79	1-23	0
1	22	PERM	Combination	Max	-33100.75	-279.32	0.00	0.00	0.00	-166.71	1-24	0
1	23	PERM	Combination	Max	-33005.16	-265.77	0.00	0.00	0.00	50.07	1-25	0
1	24	PERM	Combination	Max	-32908.78	-251.06	0.00	0.00	0.00	291.86	1-26	0
1	25	PERM	Combination	Max	-32713.81	-410.24	0.00	0.00	0.00	527.64	1-27	0

ESTRUCTURA E1. ESFUERZOS EN TABLERO PARA TODOS LOS CASOS E HIPOTESIS DE CARGA

Frame	Station	OutputCase	CaseType	StepType	P	V2	V3	T	M2	M3	FrameElem	ElemStation
Text	m	Text	Text	Text	KN	KN	KN	KN-m	KN-m	KN-m	Text	m
1	26	PERM	Combination	Max	-32615.23	-392.02	0.00	0.00	0.00	849.70	1-28	0
1	27	PERM	Combination	Max	-32515.94	-372.61	0.00	0.00	0.00	1189.23	1-29	0
1	28	PERM	Combination	Max	-32315.30	-522.25	0.00	0.00	0.00	1485.53	1-30	0
1	29	PERM	Combination	Max	-32213.96	-499.20	0.00	0.00	0.00	1887.02	1-31	0
1	30	PERM	Combination	Max	-32128.54	235.64	0.00	0.00	0.00	2234.64	1-32	0
1	31	PERM	Combination	Max	-31988.93	971.68	0.00	0.00	0.00	1740.46	1-33	0
1	32	PERM	Combination	Max	-31685.44	2238.64	0.00	0.00	0.00	590.16	1-34	0
1	33	PERM	Combination	Max	-31521.84	2960.84	0.00	0.00	0.00	-472.62	1-35	0
1	33.75	PERM	Combination	Max	-31349.39	3673.95	0.00	0.00	0.00	-2651.39	1-36	0
1	34.5	PERM	Combination	Max	-31349.39	-3861.91	0.00	0.00	0.00	-5472.33	1-37	0
1	35.25	PERM	Combination	Max	-31521.83	-3148.81	0.00	0.00	0.00	-2764.74	1-38	0
1	36	PERM	Combination	Max	-31685.44	-2430.73	0.00	0.00	0.00	-1741.52	1-39	0
1	37	PERM	Combination	Max	-31988.93	-1163.76	0.00	0.00	0.00	672.74	1-40	0
1	38	PERM	Combination	Max	-32128.54	-427.72	0.00	0.00	0.00	1902.96	1-41	0
1	39	PERM	Combination	Max	-32213.95	307.12	0.00	0.00	0.00	2290.16	1-42	0
1	40	PERM	Combination	Max	-32315.30	330.17	0.00	0.00	0.00	1911.72	1-43	0
1	41	PERM	Combination	Max	-32515.94	180.52	0.00	0.00	0.00	1469.77	1-44	0
1	42	PERM	Combination	Max	-32615.23	199.94	0.00	0.00	0.00	1145.65	1-45	0
1	43	PERM	Combination	Max	-32713.80	218.16	0.00	0.00	0.00	841.81	1-46	0
1	44	PERM	Combination	Max	-32908.78	58.97	0.00	0.00	0.00	446.83	1-47	0
1	45	PERM	Combination	Max	-33005.16	73.68	0.00	0.00	0.00	219.75	1-48	0
1	46	PERM	Combination	Max	-33100.75	87.24	0.00	0.00	0.00	16.33	1-49	0
1	47	PERM	Combination	Max	-33289.23	-80.25	0.00	0.00	0.00	-294.05	1-50	0
1	48	PERM	Combination	Max	-33382.27	-69.62	0.00	0.00	0.00	-402.74	1-51	0
1	49	PERM	Combination	Max	-33474.52	-60.08	0.00	0.00	0.00	-480.57	1-52	0
1	50	PERM	Combination	Max	-33565.94	-51.63	0.00	0.00	0.00	-525.55	1-53	0
1	51	PERM	Combination	Max	-33638.74	-231.19	0.00	0.00	0.00	-580.56	1-54	0
1	52	PERM	Combination	Max	-33598.51	-226.03	0.00	0.00	0.00	-432.27	1-55	0
1	53	PERM	Combination	Max	-33551.79	-220.47	0.00	0.00	0.00	-240.65	1-56	0
1	54	PERM	Combination	Max	-33418.93	-205.39	0.00	0.00	0.00	-35.14	1-57	0
1	55	PERM	Combination	Max	-33348.91	-101.24	0.00	0.00	0.00	100.16	1-58	0
1	56	PERM	Combination	Max	-33278.76	3.28	0.00	0.00	0.00	149.39	1-59	0
1	57	PERM	Combination	Max	-33208.49	108.18	0.00	0.00	0.00	111.88	1-60	0
1	58	PERM	Combination	Max	-33067.60	127.02	0.00	0.00	0.00	-3.02	1-61	0
1	59	PERM	Combination	Max	-32996.97	233.05	0.00	0.00	0.00	-198.81	1-62	0
1	60	PERM	Combination	Max	-32926.22	339.46	0.00	0.00	0.00	-483.68	1-63	0
1	61	PERM	Combination	Max	-32784.33	361.28	0.00	0.00	0.00	-866.08	1-64	0
1	62	PERM	Combination	Max	-32713.18	468.78	0.00	0.00	0.00	-1314.79	1-65	0
1	63	PERM	Combination	Max	-32641.92	576.66	0.00	0.00	0.00	-1854.94	1-66	0
1	64	PERM	Combination	Max	-32570.54	684.93	0.00	0.00	0.00	-2487.23	1-67	0
1	65	PERM	Combination	Max	-32427.44	710.53	0.00	0.00	0.00	-3224.42	1-68	0
1	66	PERM	Combination	Max	-32355.72	819.96	0.00	0.00	0.00	-4027.88	1-69	0
1	67	PERM	Combination	Max	-32283.89	929.77	0.00	0.00	0.00	-3706.50	1-70	0
1	67.5	PERM	Combination	Max	-32211.95	973.19	0.00	0.00	0.00	-1984.59	1-71	0
1	68.5	PERM	Combination	Max	0.00	-158.31	0.00	0.00	0.00	-39.58	1-72	0
1	0	PERM	Combination	Min	0.00	0.00	0.00	0.00	0.00	0.00	1-1	0
1	0.5	PERM	Combination	Min	-32211.95	-1289.81	0.00	0.00	0.00	-3118.09	1-2	0
1	1.5	PERM	Combination	Min	-32283.89	-1055.08	0.00	0.00	0.00	-4202.71	1-3	0
1	2	PERM	Combination	Min	-32355.72	-1012.05	0.00	0.00	0.00	-4943.88	1-4	0
1	3	PERM	Combination	Min	-32427.44	-902.62	0.00	0.00	0.00	-4030.99	1-5	0
1	4	PERM	Combination	Min	-32570.54	-877.02	0.00	0.00	0.00	-3264.19	1-6	0
1	5	PERM	Combination	Min	-32641.92	-768.75	0.00	0.00	0.00	-2521.64	1-7	0
1	6	PERM	Combination	Min	-32713.18	-660.87	0.00	0.00	0.00	-1878.60	1-8	0
1	7	PERM	Combination	Min	-32784.33	-553.37	0.00	0.00	0.00	-1321.39	1-9	0
1	8	PERM	Combination	Min	-32926.22	-531.55	0.00	0.00	0.00	-919.16	1-10	0
1	9	PERM	Combination	Min	-32996.97	-425.14	0.00	0.00	0.00	-527.88	1-11	0
1	10	PERM	Combination	Min	-33067.60	-319.11	0.00	0.00	0.00	-226.06	1-12	0
1	11	PERM	Combination	Min	-33208.50	-300.27	0.00	0.00	0.00	-92.31	1-13	0
1	12	PERM	Combination	Min	-33278.76	-195.37	0.00	0.00	0.00	50.10	1-14	0
1	13	PERM	Combination	Min	-33348.91	-90.85	0.00	0.00	0.00	105.39	1-15	0
1	14	PERM	Combination	Min	-33418.93	13.30	0.00	0.00	0.00	74.25	1-16	0
1	15	PERM	Combination	Min	-33551.79	28.38	0.00	0.00	0.00	-116.18	1-17	0
1	16	PERM	Combination	Min	-33598.51	33.94	0.00	0.00	0.00	-302.24	1-18	0
1	17	PERM	Combination	Min	-33638.74	39.10	0.00	0.00	0.00	-445.36	1-19	0
1	18	PERM	Combination	Min	-33565.94	-140.46	0.00	0.00	0.00	-569.92	1-20	0
1	19	PERM	Combination	Min	-33474.51	-132.01	0.00	0.00	0.00	-516.49	1-21	0
1	20	PERM	Combination	Min	-33382.27	-122.47	0.00	0.00	0.00	-429.11	1-22	0
1	21	PERM	Combination	Min	-33289.23	-111.84	0.00	0.00	0.00	-309.79	1-23	0
1	22	PERM	Combination	Min	-33100.75	-279.32	0.00	0.00	0.00	-166.71	1-24	0
1	23	PERM	Combination	Min	-33005.16	-265.77	0.00	0.00	0.00	50.07	1-25	0
1	24	PERM	Combination	Min	-32908.78	-251.06	0.00	0.00	0.00	291.86	1-26	0
1	25	PERM	Combination	Min	-32713.81	-410.24	0.00	0.00	0.00	527.64	1-27	0
1	26	PERM	Combination	Min	-32615.23	-392.02	0.00	0.00	0.00	849.70	1-28	0
1	27	PERM	Combination	Min	-32515.94	-372.61	0.00	0.00	0.00	1189.23	1-29	0
1	28	PERM	Combination	Min	-32315.30	-522.25	0.00	0.00	0.00	1485.53	1-30	0
1	29	PERM	Combination	Min	-32213.96	-499.20	0.00	0.00	0.00	1887.02	1-31	0
1	30	PERM	Combination	Min	-32128.54	235.64	0.00	0.00	0.00	2234.64	1-32	0
1	31	PERM	Combination	Min	-31988.93	971.68	0.00	0.00	0.00	1740.46	1-33	0
1	32	PERM	Combination	Min	-31685.44	2238.64	0.00	0.00	0.00	590.16	1-34	0
1	33	PERM	Combination	Min	-31521.84	2960.84	0.00	0.00	0.00	-472.62	1-35	0
1	33.75	PERM	Combination	Min	-31349.39	3673.95	0.00	0.00	0.00	-2651.39	1-36	0

ESTRUCTURA E1. ESFUERZOS EN TABLERO PARA TODOS LOS CASOS E HIPOTESIS DE CARGA

Frame	Station	OutputCase	CaseType	StepType	P	V2	V3	T	M2	M3	FrameElem	ElemStation
Text	m	Text	Text	Text	KN	KN	KN	KN-m	KN-m	KN-m	Text	m
1	34.5	PERM	Combination	Min	-31349.39	-3861.91	0.00	0.00	0.00	-5427.33	1-37	0
1	35.25	PERM	Combination	Min	-31521.83	-3148.81	0.00	0.00	0.00	-2764.74	1-38	0
1	36	PERM	Combination	Min	-31685.44	-2430.73	0.00	0.00	0.00	-1744.52	1-39	0
1	37	PERM	Combination	Min	-31988.93	-1163.76	0.00	0.00	0.00	672.74	1-40	0
1	38	PERM	Combination	Min	-32128.54	-427.72	0.00	0.00	0.00	1902.96	1-41	0
1	39	PERM	Combination	Min	-32213.95	307.12	0.00	0.00	0.00	2290.16	1-42	0
1	40	PERM	Combination	Min	-32315.30	330.17	0.00	0.00	0.00	1911.72	1-43	0
1	41	PERM	Combination	Min	-32515.94	180.52	0.00	0.00	0.00	1465.77	1-44	0
1	42	PERM	Combination	Min	-32615.23	199.94	0.00	0.00	0.00	1145.65	1-45	0
1	43	PERM	Combination	Min	-32713.80	218.16	0.00	0.00	0.00	841.81	1-46	0
1	44	PERM	Combination	Min	-32908.78	58.97	0.00	0.00	0.00	446.83	1-47	0
1	45	PERM	Combination	Min	-33005.16	73.68	0.00	0.00	0.00	219.75	1-48	0
1	46	PERM	Combination	Min	-33100.75	87.24	0.00	0.00	0.00	16.53	1-49	0
1	47	PERM	Combination	Min	-33289.23	-80.25	0.00	0.00	0.00	-294.05	1-50	0
1	48	PERM	Combination	Min	-33382.27	-69.62	0.00	0.00	0.00	-402.74	1-51	0
1	49	PERM	Combination	Min	-33474.52	-60.08	0.00	0.00	0.00	-480.57	1-52	0
1	50	PERM	Combination	Min	-33565.94	-51.63	0.00	0.00	0.00	-525.55	1-53	0
1	51	PERM	Combination	Min	-33638.74	-231.19	0.00	0.00	0.00	-580.56	1-54	0
1	52	PERM	Combination	Min	-33598.51	-226.03	0.00	0.00	0.00	-432.27	1-55	0
1	53	PERM	Combination	Min	-33551.79	-220.47	0.00	0.00	0.00	-240.65	1-56	0
1	54	PERM	Combination	Min	-33418.93	-205.39	0.00	0.00	0.00	-35.14	1-57	0
1	55	PERM	Combination	Min	-33348.91	-101.24	0.00	0.00	0.00	100.16	1-58	0
1	56	PERM	Combination	Min	-33278.76	3.28	0.00	0.00	0.00	149.39	1-59	0
1	57	PERM	Combination	Min	-33208.49	108.18	0.00	0.00	0.00	111.88	1-60	0
1	58	PERM	Combination	Min	-33067.60	127.02	0.00	0.00	0.00	-3.02	1-61	0
1	59	PERM	Combination	Min	-32996.97	233.05	0.00	0.00	0.00	-198.81	1-62	0
1	60	PERM	Combination	Min	-32926.22	339.46	0.00	0.00	0.00	-483.68	1-63	0
1	61	PERM	Combination	Min	-32784.33	361.28	0.00	0.00	0.00	-866.08	1-64	0
1	62	PERM	Combination	Min	-32713.18	468.78	0.00	0.00	0.00	-1314.79	1-65	0
1	63	PERM	Combination	Min	-32641.92	576.66	0.00	0.00	0.00	-1851.94	1-66	0
1	64	PERM	Combination	Min	-32570.54	684.93	0.00	0.00	0.00	-2487.23	1-67	0
1	65	PERM	Combination	Min	-32427.44	710.53	0.00	0.00	0.00	-3228.42	1-68	0
1	66	PERM	Combination	Min	-32355.72	819.96	0.00	0.00	0.00	-4022.88	1-69	0
1	67	PERM	Combination	Min	-32283.89	929.77	0.00	0.00	0.00	-3704.50	1-70	0
1	67.5	PERM	Combination	Min	-32211.95	973.19	0.00	0.00	0.00	-1984.59	1-71	0
1	68.5	PERM	Combination	Min	0.00	-158.31	0.00	0.00	0.00	-39.58	1-72	0
1	0	SC_TOTAL	Combination	Max	0.00	0.00	0.00	0.00	0.00	0.00	1-1	0
1	0.5	SC_TOTAL	Combination	Max	1.01	179.76	0.82	2900.47	1.27	0.87	1-2	0
1	1.5	SC_TOTAL	Combination	Max	1.01	179.95	0.82	2803.27	1.15	1473.93	1-3	0
1	2	SC_TOTAL	Combination	Max	1.01	179.95	0.82	2803.26	1.22	2208.99	1-4	0
1	3	SC_TOTAL	Combination	Max	1.01	181.46	0.82	2705.67	1.40	3548.33	1-5	0
1	4	SC_TOTAL	Combination	Max	1.01	184.47	0.82	2609.69	1.62	4775.46	1-6	0
1	5	SC_TOTAL	Combination	Max	1.01	199.45	0.82	2516.73	1.85	5890.87	1-7	0
1	6	SC_TOTAL	Combination	Max	1.01	241.99	0.82	2426.13	2.08	6895.23	1-8	0
1	7	SC_TOTAL	Combination	Max	1.01	285.87	0.82	2337.76	2.32	7789.39	1-9	0
1	8	SC_TOTAL	Combination	Max	1.01	331.05	0.82	2251.61	2.57	8574.30	1-10	0
1	9	SC_TOTAL	Combination	Max	1.01	377.48	0.82	2167.69	2.81	9251.10	1-11	0
1	10	SC_TOTAL	Combination	Max	1.01	425.10	0.82	2086.00	3.06	9821.08	1-12	0
1	11	SC_TOTAL	Combination	Max	1.01	473.87	0.82	2006.54	3.31	10285.68	1-13	0
1	12	SC_TOTAL	Combination	Max	1.01	523.72	0.82	1929.31	3.56	10646.50	1-14	0
1	13	SC_TOTAL	Combination	Max	1.01	574.61	0.82	1854.30	3.81	10903.29	1-15	0
1	14	SC_TOTAL	Combination	Max	1.01	626.48	0.82	1781.52	4.06	11063.95	1-16	0
1	15	SC_TOTAL	Combination	Max	1.01	679.26	0.82	1710.97	4.31	11124.54	1-17	0
1	16	SC_TOTAL	Combination	Max	1.01	732.90	0.82	1642.64	4.56	11089.28	1-18	0
1	17	SC_TOTAL	Combination	Max	1.01	787.33	0.82	1576.55	4.81	10985.16	1-19	0
1	18	SC_TOTAL	Combination	Max	1.01	842.48	0.82	1512.68	5.06	10789.56	1-20	0
1	19	SC_TOTAL	Combination	Max	1.01	898.30	0.82	1451.03	5.31	10503.25	1-21	0
1	20	SC_TOTAL	Combination	Max	1.01	954.71	0.82	1391.62	5.56	10128.93	1-22	0
1	21	SC_TOTAL	Combination	Max	1.01	1011.65	0.82	1334.43	5.82	9669.45	1-23	0
1	22	SC_TOTAL	Combination	Max	1.01	1069.04	0.82	1279.47	6.07	9127.81	1-24	0
1	23	SC_TOTAL	Combination	Max	1.01	1126.81	0.82	1226.74	6.32	8507.16	1-25	0
1	24	SC_TOTAL	Combination	Max	1.01	1184.88	0.82	1176.23	6.57	7810.81	1-26	0
1	25	SC_TOTAL	Combination	Max	1.01	1243.18	0.82	1127.95	6.82	7042.23	1-27	0
1	26	SC_TOTAL	Combination	Max	1.01	1301.64	0.82	1081.90	7.08	6205.05	1-28	0
1	27	SC_TOTAL	Combination	Max	1.01	1360.17	0.82	1038.08	7.33	5303.03	1-29	0
1	28	SC_TOTAL	Combination	Max	1.01	1418.69	0.82	996.48	7.58	4349.03	1-30	0
1	29	SC_TOTAL	Combination	Max	1.01	1477.11	0.82	957.11	7.83	3449.54	1-31	0
1	30	SC_TOTAL	Combination	Max	1.01	1535.37	0.82	919.97	8.09	2630.28	1-32	0
1	31	SC_TOTAL	Combination	Max	1.01	1593.36	0.82	885.06	8.34	1882.86	1-33	0
1	32	SC_TOTAL	Combination	Max	1.01	1689.75	0.82	865.52	8.59	1200.50	1-34	0
1	33	SC_TOTAL	Combination	Max	1.01	1745.80	0.82	839.31	8.84	577.87	1-35	0
1	33.75	SC_TOTAL	Combination	Max	1.01	1764.91	0.82	811.02	9.03	149.98	1-36	0
1	34.5	SC_TOTAL	Combination	Max	1.01	9.31	0.27	2321.71	9.23	61.24	1-37	0
1	35.25	SC_TOTAL	Combination	Max	1.01	9.41	0.27	2233.24	9.04	149.98	1-38	0
1	36	SC_TOTAL	Combination	Max	1.01	15.75	0.27	2215.81	8.85	577.82	1-39	0
1	37	SC_TOTAL	Combination	Max	1.01	33.47	0.27	2061.38	8.60	1200.46	1-40	0
1	38	SC_TOTAL	Combination	Max	1.01	53.10	0.27	1979.79	8.35	1882.86	1-41	0
1	39	SC_TOTAL	Combination	Max	1.01	74.69	0.27	1900.50	8.10	2630.28	1-42	0
1	40	SC_TOTAL	Combination	Max	1.01	98.26	0.27	1823.44	7.84	3449.55	1-43	0
1	41	SC_TOTAL	Combination	Max	1.01	123.80	0.27	1748.60	7.59	4349.03	1-44	0
1	42	SC_TOTAL	Combination	Max	1.01	151.32	0.27	1675.99	7.34	5303.03	1-45	0

ESTRUCTURA E1. ESFUERZOS EN TABLERO PARA TODOS LOS CASOS E HIPOTESIS DE CARGA

Frame	Station	OutputCase	CaseType	StepType	P	V2	V3	T	M2	M3	FrameElem	ElemStation
Text	m	Text	Text	Text	KN	KN	KN	KN-m	KN-m	KN-m	Text	m
1	43	SC_TOTAL	Combination	Max	1.01	180.84	0.27	1605.61	7.08	6205.05	1-46	0
1	44	SC_TOTAL	Combination	Max	1.01	212.35	0.27	1537.45	6.83	7042.24	1-47	0
1	45	SC_TOTAL	Combination	Max	1.01	245.86	0.27	1471.52	6.58	7810.81	1-48	0
1	46	SC_TOTAL	Combination	Max	1.01	281.36	0.27	1407.82	6.33	8507.16	1-49	0
1	47	SC_TOTAL	Combination	Max	1.01	318.86	0.27	1346.35	6.07	9127.81	1-50	0
1	48	SC_TOTAL	Combination	Max	1.01	358.35	0.27	1287.11	5.82	9669.45	1-51	0
1	49	SC_TOTAL	Combination	Max	1.01	399.83	0.27	1230.09	5.57	10128.94	1-52	0
1	50	SC_TOTAL	Combination	Max	1.01	443.30	0.27	1175.30	5.32	10503.25	1-53	0
1	51	SC_TOTAL	Combination	Max	1.01	488.73	0.27	1122.74	5.07	10789.56	1-54	0
1	52	SC_TOTAL	Combination	Max	1.01	536.13	0.27	1072.40	4.81	10985.17	1-55	0
1	53	SC_TOTAL	Combination	Max	1.01	585.49	0.27	1024.29	4.56	11089.28	1-56	0
1	54	SC_TOTAL	Combination	Max	1.01	636.79	0.27	978.41	4.31	11124.55	1-57	0
1	55	SC_TOTAL	Combination	Max	1.01	690.01	0.27	934.76	4.06	11063.95	1-58	0
1	56	SC_TOTAL	Combination	Max	1.01	745.15	0.27	893.33	3.81	10903.29	1-59	0
1	57	SC_TOTAL	Combination	Max	1.01	802.18	0.27	854.13	3.56	10646.51	1-60	0
1	58	SC_TOTAL	Combination	Max	1.01	861.08	0.27	817.16	3.31	10285.69	1-61	0
1	59	SC_TOTAL	Combination	Max	1.01	921.84	0.27	782.42	3.06	9821.08	1-62	0
1	60	SC_TOTAL	Combination	Max	1.01	984.43	0.27	749.90	2.82	9251.10	1-63	0
1	61	SC_TOTAL	Combination	Max	1.01	1048.82	0.27	719.62	2.57	8574.30	1-64	0
1	62	SC_TOTAL	Combination	Max	1.01	1114.99	0.27	691.55	2.33	7789.39	1-65	0
1	63	SC_TOTAL	Combination	Max	1.01	1182.91	0.27	665.72	2.08	6895.24	1-66	0
1	64	SC_TOTAL	Combination	Max	1.01	1252.55	0.27	642.11	1.85	5890.87	1-67	0
1	65	SC_TOTAL	Combination	Max	1.01	1323.88	0.27	621.79	1.62	4775.46	1-68	0
1	66	SC_TOTAL	Combination	Max	1.01	1396.86	0.27	609.56	1.40	3548.33	1-69	0
1	67	SC_TOTAL	Combination	Max	1.01	1471.47	0.27	596.79	1.22	2209.48	1-70	0
1	67.5	SC_TOTAL	Combination	Max	1.01	1471.47	0.27	596.80	1.15	1474.82	1-71	0
1	68.5	SC_TOTAL	Combination	Max	0.00	0.00	0.00	783.75	0.00	0.00	1-72	0
1	0	SC_TOTAL	Combination	Min	0.00	0.00	0.00	0.00	0.00	0.00	1-1	0
1	0.5	SC_TOTAL	Combination	Min	-18.48	-1547.45	-0.27	-612.40	-0.27	-270.69	1-2	0
1	1.5	SC_TOTAL	Combination	Min	-18.48	-1471.47	-0.27	-596.79	-0.62	-331.87	1-3	0
1	2	SC_TOTAL	Combination	Min	-18.48	-1471.47	-0.27	-596.79	-0.97	-369.21	1-4	0
1	3	SC_TOTAL	Combination	Min	-18.48	-1396.86	-0.27	-609.56	-1.73	-456.32	1-5	0
1	4	SC_TOTAL	Combination	Min	-18.48	-1323.88	-0.27	-621.79	-2.51	-635.83	1-6	0
1	5	SC_TOTAL	Combination	Min	-18.48	-1252.55	-0.27	-642.12	-3.31	-815.41	1-7	0
1	6	SC_TOTAL	Combination	Min	-18.48	-1182.91	-0.27	-665.72	-4.12	-994.98	1-8	0
1	7	SC_TOTAL	Combination	Min	-18.48	-1114.99	-0.27	-691.56	-4.92	-1174.56	1-9	0
1	8	SC_TOTAL	Combination	Min	-18.48	-1048.82	-0.27	-719.62	-5.74	-1354.14	1-10	0
1	9	SC_TOTAL	Combination	Min	-18.48	-984.42	-0.27	-749.91	-6.55	-1533.72	1-11	0
1	10	SC_TOTAL	Combination	Min	-18.48	-921.84	-0.27	-782.42	-7.37	-1713.29	1-12	0
1	11	SC_TOTAL	Combination	Min	-18.48	-861.08	-0.27	-817.17	-8.18	-1891.87	1-13	0
1	12	SC_TOTAL	Combination	Min	-18.48	-802.18	-0.27	-854.14	-9.00	-2071.45	1-14	0
1	13	SC_TOTAL	Combination	Min	-18.48	-745.15	-0.27	-893.34	-9.82	-2251.03	1-15	0
1	14	SC_TOTAL	Combination	Min	-18.48	-690.01	-0.27	-934.76	-10.64	-2431.60	1-16	0
1	15	SC_TOTAL	Combination	Min	-18.48	-636.79	-0.27	-978.42	-11.46	-2611.18	1-17	0
1	16	SC_TOTAL	Combination	Min	-18.48	-585.49	-0.27	-1024.30	-12.28	-2790.76	1-18	0
1	17	SC_TOTAL	Combination	Min	-18.48	-536.13	-0.27	-1072.40	-13.10	-2970.34	1-19	0
1	18	SC_TOTAL	Combination	Min	-18.48	-488.73	-0.27	-1122.74	-13.92	-3149.91	1-20	0
1	19	SC_TOTAL	Combination	Min	-18.48	-443.30	-0.27	-1175.30	-14.74	-3329.49	1-21	0
1	20	SC_TOTAL	Combination	Min	-18.48	-399.83	-0.27	-1230.09	-15.56	-3509.07	1-22	0
1	21	SC_TOTAL	Combination	Min	-18.48	-358.35	-0.27	-1287.11	-16.38	-3688.65	1-23	0
1	22	SC_TOTAL	Combination	Min	-18.48	-318.86	-0.27	-1346.36	-17.20	-3868.23	1-24	0
1	23	SC_TOTAL	Combination	Min	-18.48	-281.36	-0.27	-1407.83	-18.02	-4047.80	1-25	0
1	24	SC_TOTAL	Combination	Min	-18.48	-245.86	-0.27	-1471.53	-18.84	-4227.38	1-26	0
1	25	SC_TOTAL	Combination	Min	-18.48	-212.35	-0.27	-1537.46	-19.66	-4406.96	1-27	0
1	26	SC_TOTAL	Combination	Min	-18.48	-180.84	-0.27	-1605.61	-20.48	-4586.54	1-28	0
1	27	SC_TOTAL	Combination	Min	-18.48	-151.32	-0.27	-1675.99	-21.30	-4766.14	1-29	0
1	28	SC_TOTAL	Combination	Min	-18.48	-123.80	-0.27	-1748.60	-22.12	-4945.65	1-30	0
1	29	SC_TOTAL	Combination	Min	-18.48	-98.26	-0.27	-1823.44	-22.94	-5125.51	1-31	0
1	30	SC_TOTAL	Combination	Min	-18.48	-74.69	-0.27	-1900.51	-23.76	-5685.19	1-32	0
1	31	SC_TOTAL	Combination	Min	-18.48	-53.10	-0.27	-1979.80	-24.59	-6244.91	1-33	0
1	32	SC_TOTAL	Combination	Min	-18.48	-33.43	-0.27	-2131.15	-25.41	-6911.30	1-34	0
1	33	SC_TOTAL	Combination	Min	-18.48	-15.75	-0.27	-2215.80	-26.23	-7663.01	1-35	0
1	33.75	SC_TOTAL	Combination	Min	-18.48	-9.41	-0.27	-2233.24	-26.84	-8290.46	1-36	0
1	34.5	SC_TOTAL	Combination	Min	-18.48	-1820.94	-0.82	-809.42	-27.46	-8917.35	1-37	0
1	35.25	SC_TOTAL	Combination	Min	-18.48	-1764.91	-0.82	-811.02	-26.85	-8290.46	1-38	0
1	36	SC_TOTAL	Combination	Min	-18.48	-1745.80	-0.82	-839.29	-26.23	-7663.39	1-39	0
1	37	SC_TOTAL	Combination	Min	-18.48	-1651.01	-0.82	-852.86	-25.41	-6911.30	1-40	0
1	38	SC_TOTAL	Combination	Min	-18.48	-1593.36	-0.82	-885.06	-24.59	-6244.91	1-41	0
1	39	SC_TOTAL	Combination	Min	-18.48	-1535.37	-0.82	-919.97	-23.77	-5687.19	1-42	0
1	40	SC_TOTAL	Combination	Min	-18.48	-1477.11	-0.82	-957.12	-22.94	-5125.52	1-43	0
1	41	SC_TOTAL	Combination	Min	-18.48	-1418.69	-0.82	-996.48	-22.12	-4945.65	1-44	0
1	42	SC_TOTAL	Combination	Min	-18.48	-1360.17	-0.82	-1038.08	-21.30	-4766.14	1-45	0
1	43	SC_TOTAL	Combination	Min	-18.48	-1301.64	-0.82	-1081.90	-20.48	-4586.54	1-46	0
1	44	SC_TOTAL	Combination	Min	-18.48	-1243.18	-0.82	-1127.95	-19.66	-4406.96	1-47	0
1	45	SC_TOTAL	Combination	Min	-18.48	-1184.88	-0.82	-1176.23	-18.84	-4227.38	1-48	0
1	46	SC_TOTAL	Combination	Min	-18.48	-1126.81	-0.82	-1226.74	-18.02	-4047.80	1-49	0
1	47	SC_TOTAL	Combination	Min	-18.48	-1069.04	-0.82	-1279.47	-17.20	-3868.23	1-50	0
1	48	SC_TOTAL	Combination	Min	-18.48	-1011.65	-0.82	-1334.43	-16.38	-3688.65	1-51	0
1	49	SC_TOTAL	Combination	Min	-18.48	-954.71	-0.82	-1391.62	-15.56	-3509.07	1-52	0
1	50	SC_TOTAL	Combination	Min	-18.48	-898.30	-0.82	-1451.04	-14.74	-3329.49	1-53	0
1	51	SC_TOTAL	Combination	Min	-18.48	-842.48	-0.82	-1512.68	-13.92	-3149.92	1-54	0

ESTRUCTURA E1. ESFUERZOS EN TABLERO PARA TODOS LOS CASOS E HIPOTESIS DE CARGA

Frame	Station	OutputCase	CaseType	StepType	P	V2	V3	T	M2	M3	FrameElem	ElemStation
Text	m	Text	Text	Text	KN	KN	KN	KN-m	KN-m	KN-m	Text	m
1	52	SC_TOTAL	Combination	Min	-18.48	-787.33	-0.82	-1576.55	-13.10	-2978.34	1-55	0
1	53	SC_TOTAL	Combination	Min	-18.48	-732.90	-0.82	-1642.65	-12.28	-2794.76	1-56	0
1	54	SC_TOTAL	Combination	Min	-18.48	-679.26	-0.82	-1710.97	-11.46	-2611.18	1-57	0
1	55	SC_TOTAL	Combination	Min	-18.48	-626.48	-0.82	-1781.53	-10.64	-2431.60	1-58	0
1	56	SC_TOTAL	Combination	Min	-18.48	-574.61	-0.82	-1854.31	-9.82	-2254.03	1-59	0
1	57	SC_TOTAL	Combination	Min	-18.48	-523.72	-0.82	-1929.31	-9.00	-2078.45	1-60	0
1	58	SC_TOTAL	Combination	Min	-18.48	-473.87	-0.82	-2006.55	-8.18	-1891.87	1-61	0
1	59	SC_TOTAL	Combination	Min	-18.48	-425.10	-0.82	-2086.01	-7.37	-1711.29	1-62	0
1	60	SC_TOTAL	Combination	Min	-18.48	-377.48	-0.82	-2167.70	-6.55	-1533.72	1-63	0
1	61	SC_TOTAL	Combination	Min	-18.48	-331.05	-0.82	-2251.62	-5.74	-1354.14	1-64	0
1	62	SC_TOTAL	Combination	Min	-18.48	-285.87	-0.82	-2337.76	-4.93	-1174.56	1-65	0
1	63	SC_TOTAL	Combination	Min	-18.48	-241.99	-0.82	-2426.13	-4.12	-994.99	1-66	0
1	64	SC_TOTAL	Combination	Min	-18.48	-199.45	-0.82	-2516.73	-3.31	-815.41	1-67	0
1	65	SC_TOTAL	Combination	Min	-18.48	-184.47	-0.82	-2609.70	-2.51	-635.83	1-68	0
1	66	SC_TOTAL	Combination	Min	-18.48	-181.46	-0.82	-2705.68	-1.73	-456.32	1-69	0
1	67	SC_TOTAL	Combination	Min	-18.48	-179.95	-0.82	-2803.28	-0.97	-369.09	1-70	0
1	67.5	SC_TOTAL	Combination	Min	-18.48	-179.95	-0.82	-2803.31	-0.62	-331.65	1-71	0
1	68.5	SC_TOTAL	Combination	Min	0.00	-519.75	0.00	-109.37	0.00	-259.36	1-72	0
1	0	ENV_PCARGA	Combination	Max	0.00	0.00	0.00	0.00	0.00	0.00	1-1	0
1	0.5	ENV_PCARGA	Combination	Max	-3.08	111.65	0.00	0.00	0.00	-2.66	1-2	0
1	1.5	ENV_PCARGA	Combination	Max	-3.08	111.65	0.00	0.00	0.00	777.47	1-3	0
1	2	ENV_PCARGA	Combination	Max	-3.08	111.65	0.00	0.00	0.00	1171.03	1-4	0
1	3	ENV_PCARGA	Combination	Max	-3.08	111.65	0.00	0.00	0.00	1959.01	1-5	0
1	4	ENV_PCARGA	Combination	Max	-3.08	111.65	0.00	0.00	0.00	2746.98	1-6	0
1	5	ENV_PCARGA	Combination	Max	-3.08	111.65	0.00	0.00	0.00	3414.04	1-7	0
1	6	ENV_PCARGA	Combination	Max	-3.08	111.65	0.00	0.00	0.00	4064.73	1-8	0
1	7	ENV_PCARGA	Combination	Max	-3.08	111.65	0.00	0.00	0.00	4715.41	1-9	0
1	8	ENV_PCARGA	Combination	Max	-3.08	111.65	0.00	0.00	0.00	5283.59	1-10	0
1	9	ENV_PCARGA	Combination	Max	-3.08	111.65	0.00	0.00	0.00	5718.52	1-11	0
1	10	ENV_PCARGA	Combination	Max	-3.08	111.65	0.00	0.00	0.00	6153.46	1-12	0
1	11	ENV_PCARGA	Combination	Max	-3.08	111.65	0.00	0.00	0.00	6513.69	1-13	0
1	12	ENV_PCARGA	Combination	Max	-3.08	111.65	0.00	0.00	0.00	6748.26	1-14	0
1	13	ENV_PCARGA	Combination	Max	-3.08	111.65	0.00	0.00	0.00	6790.93	1-15	0
1	14	ENV_PCARGA	Combination	Max	-3.08	111.65	0.00	0.00	0.00	6833.60	1-16	0
1	15	ENV_PCARGA	Combination	Max	-3.08	111.65	0.00	0.00	0.00	6876.27	1-17	0
1	16	ENV_PCARGA	Combination	Max	-3.08	298.97	0.00	0.00	0.00	6915.09	1-18	0
1	17	ENV_PCARGA	Combination	Max	-3.08	298.97	0.00	0.00	0.00	6761.63	1-19	0
1	18	ENV_PCARGA	Combination	Max	-3.08	349.60	0.00	0.00	0.00	6478.66	1-20	0
1	19	ENV_PCARGA	Combination	Max	-3.08	349.60	0.00	0.00	0.00	6129.06	1-21	0
1	20	ENV_PCARGA	Combination	Max	-3.08	436.26	0.00	0.00	0.00	5779.47	1-22	0
1	21	ENV_PCARGA	Combination	Max	-3.08	565.34	0.00	0.00	0.00	5289.22	1-23	0
1	22	ENV_PCARGA	Combination	Max	-3.08	565.34	0.00	0.00	0.00	4723.88	1-24	0
1	23	ENV_PCARGA	Combination	Max	-3.08	565.34	0.00	0.00	0.00	4158.54	1-25	0
1	24	ENV_PCARGA	Combination	Max	-3.08	702.64	0.00	0.00	0.00	3571.16	1-26	0
1	25	ENV_PCARGA	Combination	Max	-3.08	702.64	0.00	0.00	0.00	2868.53	1-27	0
1	26	ENV_PCARGA	Combination	Max	-3.08	702.64	0.00	0.00	0.00	2165.89	1-28	0
1	27	ENV_PCARGA	Combination	Max	-3.08	702.64	0.00	0.00	0.00	1463.25	1-29	0
1	28	ENV_PCARGA	Combination	Max	-3.08	702.64	0.00	0.00	0.00	760.62	1-30	0
1	29	ENV_PCARGA	Combination	Max	-3.08	702.64	0.00	0.00	0.00	57.98	1-31	0
1	30	ENV_PCARGA	Combination	Max	-3.08	702.64	0.00	0.00	0.00	-644.65	1-32	0
1	31	ENV_PCARGA	Combination	Max	-3.08	702.64	0.00	0.00	0.00	-1347.29	1-33	0
1	32	ENV_PCARGA	Combination	Max	-3.08	702.64	0.00	0.00	0.00	-2049.92	1-34	0
1	33	ENV_PCARGA	Combination	Max	-3.08	702.64	0.00	0.00	0.00	-2752.13	1-35	0
1	33.75	ENV_PCARGA	Combination	Max	-3.08	702.64	0.00	0.00	0.00	-3278.11	1-36	0
1	34.5	ENV_PCARGA	Combination	Max	-3.08	-111.65	0.00	0.00	0.00	-3794.86	1-37	0
1	35.25	ENV_PCARGA	Combination	Max	-3.08	-111.65	0.00	0.00	0.00	-3278.27	1-38	0
1	36	ENV_PCARGA	Combination	Max	-3.08	-111.65	0.00	0.00	0.00	-2752.68	1-39	0
1	37	ENV_PCARGA	Combination	Max	-3.08	-111.65	0.00	0.00	0.00	-2050.00	1-40	0
1	38	ENV_PCARGA	Combination	Max	-3.08	-111.65	0.00	0.00	0.00	-1347.31	1-41	0
1	39	ENV_PCARGA	Combination	Max	-3.08	-111.65	0.00	0.00	0.00	-644.62	1-42	0
1	40	ENV_PCARGA	Combination	Max	-3.08	-111.65	0.00	0.00	0.00	58.07	1-43	0
1	41	ENV_PCARGA	Combination	Max	-3.08	-111.65	0.00	0.00	0.00	760.75	1-44	0
1	42	ENV_PCARGA	Combination	Max	-3.08	-111.65	0.00	0.00	0.00	1463.44	1-45	0
1	43	ENV_PCARGA	Combination	Max	-3.08	-111.65	0.00	0.00	0.00	2166.13	1-46	0
1	44	ENV_PCARGA	Combination	Max	-3.08	-111.65	0.00	0.00	0.00	2868.82	1-47	0
1	45	ENV_PCARGA	Combination	Max	-3.08	-111.65	0.00	0.00	0.00	3571.50	1-48	0
1	46	ENV_PCARGA	Combination	Max	-3.08	-111.65	0.00	0.00	0.00	4158.86	1-49	0
1	47	ENV_PCARGA	Combination	Max	-3.08	-111.65	0.00	0.00	0.00	4724.26	1-50	0
1	48	ENV_PCARGA	Combination	Max	-3.08	-111.65	0.00	0.00	0.00	5289.65	1-51	0
1	49	ENV_PCARGA	Combination	Max	-3.08	-111.65	0.00	0.00	0.00	5779.54	1-52	0
1	50	ENV_PCARGA	Combination	Max	-3.08	-111.65	0.00	0.00	0.00	6129.18	1-53	0
1	51	ENV_PCARGA	Combination	Max	-3.08	-111.65	0.00	0.00	0.00	6478.83	1-54	0
1	52	ENV_PCARGA	Combination	Max	-3.08	-111.65	0.00	0.00	0.00	6761.80	1-55	0
1	53	ENV_PCARGA	Combination	Max	-3.08	-84.10	0.00	0.00	0.00	6915.31	1-56	0
1	54	ENV_PCARGA	Combination	Max	-3.08	42.62	0.00	0.00	0.00	6876.62	1-57	0
1	55	ENV_PCARGA	Combination	Max	-3.08	42.62	0.00	0.00	0.00	6834.00	1-58	0
1	56	ENV_PCARGA	Combination	Max	-3.08	112.03	0.00	0.00	0.00	6791.38	1-59	0
1	57	ENV_PCARGA	Combination	Max	-3.08	112.03	0.00	0.00	0.00	6748.76	1-60	0
1	58	ENV_PCARGA	Combination	Max	-3.08	308.17	0.00	0.00	0.00	6513.93	1-61	0
1	59	ENV_PCARGA	Combination	Max	-3.08	434.88	0.00	0.00	0.00	6153.58	1-62	0
1	60	ENV_PCARGA	Combination	Max	-3.08	434.88	0.00	0.00	0.00	5718.70	1-63	0

ESTRUCTURA E1. ESFUERZOS EN TABLERO PARA TODOS LOS CASOS E HIPOTESIS DE CARGA

Frame	Station	OutputCase	CaseType	StepType	P	V2	V3	T	M2	M3	FrameElem	ElemStation
Text	m	Text	Text	Text	KN	KN	KN	KN-m	KN-m	KN-m	Text	m
1	61	ENV_PCARGA	Combination	Max	-3.08	434.88	0.00	0.00	0.00	5283.81	1-64	0
1	62	ENV_PCARGA	Combination	Max	-3.08	650.63	0.00	0.00	0.00	4715.17	1-65	0
1	63	ENV_PCARGA	Combination	Max	-3.08	650.63	0.00	0.00	0.00	4064.54	1-66	0
1	64	ENV_PCARGA	Combination	Max	-3.08	650.63	0.00	0.00	0.00	3413.91	1-67	0
1	65	ENV_PCARGA	Combination	Max	-3.08	787.92	0.00	0.00	0.00	2746.80	1-68	0
1	66	ENV_PCARGA	Combination	Max	-3.08	787.92	0.00	0.00	0.00	1958.88	1-69	0
1	67	ENV_PCARGA	Combination	Max	-3.08	787.92	0.00	0.00	0.00	1171.38	1-70	0
1	67.5	ENV_PCARGA	Combination	Max	-3.08	787.92	0.00	0.00	0.00	778.20	1-71	0
1	68.5	ENV_PCARGA	Combination	Max	0.00	0.00	0.00	0.00	0.00	0.00	1-72	0
1	0	ENV_PCARGA	Combination	Min	0.00	0.00	0.00	0.00	0.00	0.00	1-1	0
1	0.5	ENV_PCARGA	Combination	Min	-11.28	-787.98	0.00	0.00	0.00	-9.72	1-2	0
1	1.5	ENV_PCARGA	Combination	Min	-11.28	-787.98	0.00	0.00	0.00	-114.52	1-3	0
1	2	ENV_PCARGA	Combination	Min	-11.28	-787.98	0.00	0.00	0.00	-170.46	1-4	0
1	3	ENV_PCARGA	Combination	Min	-11.28	-787.98	0.00	0.00	0.00	-282.12	1-5	0
1	4	ENV_PCARGA	Combination	Min	-11.28	-787.98	0.00	0.00	0.00	-393.77	1-6	0
1	5	ENV_PCARGA	Combination	Min	-11.28	-650.68	0.00	0.00	0.00	-505.42	1-7	0
1	6	ENV_PCARGA	Combination	Min	-11.28	-650.68	0.00	0.00	0.00	-617.08	1-8	0
1	7	ENV_PCARGA	Combination	Min	-11.28	-650.68	0.00	0.00	0.00	-728.73	1-9	0
1	8	ENV_PCARGA	Combination	Min	-11.28	-434.94	0.00	0.00	0.00	-840.38	1-10	0
1	9	ENV_PCARGA	Combination	Min	-11.28	-434.94	0.00	0.00	0.00	-952.03	1-11	0
1	10	ENV_PCARGA	Combination	Min	-11.28	-434.94	0.00	0.00	0.00	-1063.69	1-12	0
1	11	ENV_PCARGA	Combination	Min	-11.28	-309.04	0.00	0.00	0.00	-1175.34	1-13	0
1	12	ENV_PCARGA	Combination	Min	-11.28	-112.91	0.00	0.00	0.00	-1286.99	1-14	0
1	13	ENV_PCARGA	Combination	Min	-11.28	-42.67	0.00	0.00	0.00	-1398.65	1-15	0
1	14	ENV_PCARGA	Combination	Min	-11.28	-42.67	0.00	0.00	0.00	-1510.30	1-16	0
1	15	ENV_PCARGA	Combination	Min	-11.28	-42.67	0.00	0.00	0.00	-1621.95	1-17	0
1	16	ENV_PCARGA	Combination	Min	-11.28	111.65	0.00	0.00	0.00	-1733.60	1-18	0
1	17	ENV_PCARGA	Combination	Min	-11.28	111.65	0.00	0.00	0.00	-1845.26	1-19	0
1	18	ENV_PCARGA	Combination	Min	-11.28	111.65	0.00	0.00	0.00	-1956.91	1-20	0
1	19	ENV_PCARGA	Combination	Min	-11.28	111.65	0.00	0.00	0.00	-2068.56	1-21	0
1	20	ENV_PCARGA	Combination	Min	-11.28	111.65	0.00	0.00	0.00	-2180.22	1-22	0
1	21	ENV_PCARGA	Combination	Min	-11.28	111.65	0.00	0.00	0.00	-2291.87	1-23	0
1	22	ENV_PCARGA	Combination	Min	-11.28	111.65	0.00	0.00	0.00	-2403.52	1-24	0
1	23	ENV_PCARGA	Combination	Min	-11.28	111.65	0.00	0.00	0.00	-2515.17	1-25	0
1	24	ENV_PCARGA	Combination	Min	-11.28	111.65	0.00	0.00	0.00	-2626.83	1-26	0
1	25	ENV_PCARGA	Combination	Min	-11.28	111.65	0.00	0.00	0.00	-2738.48	1-27	0
1	26	ENV_PCARGA	Combination	Min	-11.28	111.65	0.00	0.00	0.00	-2850.13	1-28	0
1	27	ENV_PCARGA	Combination	Min	-11.28	111.65	0.00	0.00	0.00	-2961.78	1-29	0
1	28	ENV_PCARGA	Combination	Min	-11.28	111.65	0.00	0.00	0.00	-3073.44	1-30	0
1	29	ENV_PCARGA	Combination	Min	-11.28	111.65	0.00	0.00	0.00	-3185.09	1-31	0
1	30	ENV_PCARGA	Combination	Min	-11.28	111.65	0.00	0.00	0.00	-3296.74	1-32	0
1	31	ENV_PCARGA	Combination	Min	-11.28	111.65	0.00	0.00	0.00	-3408.40	1-33	0
1	32	ENV_PCARGA	Combination	Min	-11.28	111.65	0.00	0.00	0.00	-3520.05	1-34	0
1	33	ENV_PCARGA	Combination	Min	-11.28	111.65	0.00	0.00	0.00	-3631.58	1-35	0
1	33.75	ENV_PCARGA	Combination	Min	-11.28	111.65	0.00	0.00	0.00	-3938.62	1-36	0
1	34.5	ENV_PCARGA	Combination	Min	-11.28	-702.69	0.00	0.00	0.00	-4245.82	1-37	0
1	35.25	ENV_PCARGA	Combination	Min	-11.28	-702.69	0.00	0.00	0.00	-3937.96	1-38	0
1	36	ENV_PCARGA	Combination	Min	-11.28	-702.69	0.00	0.00	0.00	-3631.51	1-39	0
1	37	ENV_PCARGA	Combination	Min	-11.28	-702.69	0.00	0.00	0.00	-3518.86	1-40	0
1	38	ENV_PCARGA	Combination	Min	-11.28	-702.69	0.00	0.00	0.00	-3408.21	1-41	0
1	39	ENV_PCARGA	Combination	Min	-11.28	-702.69	0.00	0.00	0.00	-3296.57	1-42	0
1	40	ENV_PCARGA	Combination	Min	-11.28	-702.69	0.00	0.00	0.00	-3185.92	1-43	0
1	41	ENV_PCARGA	Combination	Min	-11.28	-702.69	0.00	0.00	0.00	-3073.27	1-44	0
1	42	ENV_PCARGA	Combination	Min	-11.28	-702.69	0.00	0.00	0.00	-2961.63	1-45	0
1	43	ENV_PCARGA	Combination	Min	-11.28	-702.69	0.00	0.00	0.00	-2849.98	1-46	0
1	44	ENV_PCARGA	Combination	Min	-11.28	-702.69	0.00	0.00	0.00	-2738.33	1-47	0
1	45	ENV_PCARGA	Combination	Min	-11.28	-702.69	0.00	0.00	0.00	-2626.69	1-48	0
1	46	ENV_PCARGA	Combination	Min	-11.28	-565.39	0.00	0.00	0.00	-2515.04	1-49	0
1	47	ENV_PCARGA	Combination	Min	-11.28	-565.39	0.00	0.00	0.00	-2403.39	1-50	0
1	48	ENV_PCARGA	Combination	Min	-11.28	-565.39	0.00	0.00	0.00	-2291.75	1-51	0
1	49	ENV_PCARGA	Combination	Min	-11.28	-437.14	0.00	0.00	0.00	-2180.10	1-52	0
1	50	ENV_PCARGA	Combination	Min	-11.28	-349.65	0.00	0.00	0.00	-2068.45	1-53	0
1	51	ENV_PCARGA	Combination	Min	-11.28	-349.65	0.00	0.00	0.00	-1956.80	1-54	0
1	52	ENV_PCARGA	Combination	Min	-11.28	-299.85	0.00	0.00	0.00	-1845.16	1-55	0
1	53	ENV_PCARGA	Combination	Min	-11.28	-153.52	0.00	0.00	0.00	-1733.51	1-56	0
1	54	ENV_PCARGA	Combination	Min	-11.28	-111.65	0.00	0.00	0.00	-1621.86	1-57	0
1	55	ENV_PCARGA	Combination	Min	-11.28	-111.65	0.00	0.00	0.00	-1510.22	1-58	0
1	56	ENV_PCARGA	Combination	Min	-11.28	-111.65	0.00	0.00	0.00	-1398.57	1-59	0
1	57	ENV_PCARGA	Combination	Min	-11.28	-111.65	0.00	0.00	0.00	-1286.92	1-60	0
1	58	ENV_PCARGA	Combination	Min	-11.28	-111.65	0.00	0.00	0.00	-1175.28	1-61	0
1	59	ENV_PCARGA	Combination	Min	-11.28	-111.65	0.00	0.00	0.00	-1063.63	1-62	0
1	60	ENV_PCARGA	Combination	Min	-11.28	-111.65	0.00	0.00	0.00	-951.98	1-63	0
1	61	ENV_PCARGA	Combination	Min	-11.28	-111.65	0.00	0.00	0.00	-840.34	1-64	0
1	62	ENV_PCARGA	Combination	Min	-11.28	-111.65	0.00	0.00	0.00	-728.69	1-65	0
1	63	ENV_PCARGA	Combination	Min	-11.28	-111.65	0.00	0.00	0.00	-617.04	1-66	0
1	64	ENV_PCARGA	Combination	Min	-11.28	-111.65	0.00	0.00	0.00	-505.40	1-67	0
1	65	ENV_PCARGA	Combination	Min	-11.28	-111.65	0.00	0.00	0.00	-393.75	1-68	0
1	66	ENV_PCARGA	Combination	Min	-11.28	-111.65	0.00	0.00	0.00	-282.10	1-69	0
1	67	ENV_PCARGA	Combination	Min	-11.28	-111.65	0.00	0.00	0.00	-170.34	1-70	0
1	67.5	ENV_PCARGA	Combination	Min	-11.28	-111.65	0.00	0.00	0.00	-114.30	1-71	0
1	68.5	ENV_PCARGA	Combination	Min	0.00	0.00	0.00	0.00	0.00	0.00	1-72	0

COMPROBACIÓN TENSIONAL DEL TABLERO

FCK HORMIGÓN	40	Mpa

Intervalo de tensiones admisibles

	CUASIP	FREC	CARACT
T(-) COMPRESIÓN	-24.0	-24.0	-24.0
T(+) TRACCIÓN	0.0	3.5	5.0

	CARACT_01				CARACT_02				
	Fibra Superior		Fibra Inferior		Fibra Superior		Fibra Inferior		CUMPLE
ABCISA (m)	T+ (Mpa)	T- (Mpa)	T+ (Mpa)	T- (Mpa)	T+ (Mpa)	T- (Mpa)	T+ (Mpa)	T- (Mpa)	CARACT?
0.00	0.00	0.00	0.00	0.00	0.00	0.00	0.00	0.00	VERDADERO
0.50	-1.51	-1.67	-3.40	-3.65	-1.87	-2.03	-4.18	-4.43	VERDADERO
1.50	-1.79	-2.61	-4.06	-5.23	-2.03	-2.85	-5.42	-6.59	VERDADERO
2.00	-2.67	-3.82	-5.24	-7.02	-3.02	-4.17	-7.15	-8.93	VERDADERO
3.00	-3.01	-4.76	-3.94	-6.57	-3.27	-5.02	-5.97	-8.60	VERDADERO
4.00	-3.26	-5.61	-2.78	-6.25	-3.45	-5.79	-4.93	-8.40	VERDADERO
5.00	-3.49	-6.40	-1.68	-5.95	-3.61	-6.52	-3.93	-8.20	VERDADERO
6.00	-3.68	-7.11	-0.70	-5.69	-3.74	-7.17	-3.04	-8.04	VERDADERO
7.00	-3.84	-7.74	0.17	-5.50	-3.84	-7.75	-2.25	-7.92	VERDADERO
8.00	-3.94	-8.28	0.89	-5.39	-3.90	-8.24	-1.61	-7.89	VERDADERO
9.00	-4.02	-8.76	1.55	-5.30	-3.95	-8.69	-1.01	-7.85	VERDADERO
10.00	-4.07	-9.17	2.10	-5.25	-3.97	-9.06	-0.50	-7.85	VERDADERO
11.00	-4.06	-9.48	2.49	-5.31	-3.93	-9.35	-0.16	-7.95	VERDADERO
12.00	-4.04	-9.73	2.83	-5.36	-3.90	-9.59	0.16	-8.02	VERDADERO
13.00	-3.98	-9.91	3.06	-5.46	-3.84	-9.77	0.38	-8.14	VERDADERO
14.00	-3.89	-10.02	3.19	-5.62	-3.75	-9.88	0.51	-8.29	VERDADERO
15.00	-3.74	-10.04	3.17	-5.87	-3.61	-9.91	0.49	-8.54	VERDADERO
16.00	-3.57	-10.01	3.10	-6.11	-3.46	-9.90	0.45	-8.76	VERDADERO
17.00	-3.42	-9.95	3.01	-6.35	-3.35	-9.88	0.41	-8.94	VERDADERO
18.00	-3.24	-9.85	2.88	-6.57	-3.22	-9.83	0.36	-9.09	VERDADERO
19.00	-3.12	-9.76	2.78	-6.71	-3.17	-9.81	0.38	-9.12	VERDADERO
20.00	-3.00	-9.64	2.64	-6.85	-3.15	-9.79	0.38	-9.11	VERDADERO
21.00	-2.88	-9.49	2.46	-6.98	-3.14	-9.76	0.36	-9.08	VERDADERO
22.00	-2.75	-9.30	2.25	-7.10	-3.14	-9.69	0.34	-9.01	VERDADERO
23.00	-2.65	-9.12	2.01	-7.21	-3.19	-9.65	0.32	-8.90	VERDADERO
24.00	-2.55	-8.90	1.73	-7.31	-3.25	-9.60	0.28	-8.76	VERDADERO
25.00	-2.43	-8.63	1.41	-7.42	-3.30	-9.50	0.23	-8.60	VERDADERO
26.00	-2.35	-8.38	1.08	-7.50	-3.42	-9.45	0.18	-8.40	VERDADERO
27.00	-2.26	-8.10	0.71	-7.59	-3.54	-9.38	0.12	-8.18	VERDADERO
28.00	-2.14	-7.76	0.29	-7.70	-3.64	-9.26	0.04	-7.96	VERDADERO
29.00	-2.06	-7.44	-0.12	-7.79	-3.81	-9.19	-0.02	-7.69	VERDADERO
30.00	-1.95	-7.08	-0.60	-7.91	-3.96	-9.09	-0.13	-7.44	VERDADERO
31.00	-1.38	-6.41	-1.51	-8.69	-3.59	-8.62	-0.73	-7.91	VERDADERO
32.00	-0.48	-5.47	-2.74	-9.86	-2.87	-7.85	-1.71	-8.82	VERDADERO
33.00	1.33	-3.41	-2.89	-9.05	-0.93	-5.67	-1.60	-7.76	VERDADERO
33.75	2.42	-2.29	-4.30	-10.42	0.11	-4.59	-2.94	-9.06	VERDADERO
34.50	3.71	-1.08	-5.86	-12.09	1.38	-3.41	-4.47	-10.71	VERDADERO

COMPROBACIÓN TENSIONAL DEL TABLERO

FCK HORMIGÓN	40	Mpa

Intervalo de tensiones admisibles

	CUASIP	FREC	CARACT
T(-) COMPRESIÓN	-24.0	-24.0	-24.0
T(+) TRACCIÓN	0.0	3.5	5.0

	CARACT_01				CARACT_02				
	Fibra Superior		Fibra Inferior		Fibra Superior		Fibra Inferior		CUMPLE
ABCISA (m)	T+ (Mpa)	T- (Mpa)	T+ (Mpa)	T- (Mpa)	T+ (Mpa)	T- (Mpa)	T+ (Mpa)	T- (Mpa)	CARACT?
35.25	2.44	-2.27	-4.37	-10.49	0.13	-4.57	-3.02	-9.14	VERDADERO
36.00	0.79	-4.14	-4.62	-11.67	-1.70	-6.63	-3.44	-10.48	VERDADERO
37.00	-0.55	-5.53	-2.75	-9.86	-2.95	-7.93	-1.72	-8.82	VERDADERO
38.00	-1.45	-6.47	-1.46	-8.63	-3.68	-8.70	-0.67	-7.84	VERDADERO
39.00	-1.98	-7.10	-0.60	-7.90	-3.99	-9.12	-0.12	-7.42	VERDADERO
40.00	-2.08	-7.45	-0.13	-7.79	-3.83	-9.21	-0.04	-7.69	VERDADERO
41.00	-2.16	-7.77	0.24	-7.73	-3.67	-9.28	-0.02	-8.00	VERDADERO
42.00	-2.26	-8.09	0.66	-7.62	-3.54	-9.37	0.07	-8.22	VERDADERO
43.00	-2.36	-8.38	1.05	-7.52	-3.43	-9.45	0.15	-8.42	VERDADERO
44.00	-2.43	-8.62	1.34	-7.48	-3.30	-9.49	0.13	-8.68	VERDADERO
45.00	-2.54	-8.88	1.67	-7.36	-3.24	-9.57	0.21	-8.82	VERDADERO
46.00	-2.65	-9.11	1.97	-7.24	-3.19	-9.64	0.27	-8.93	VERDADERO
47.00	-2.73	-9.28	2.15	-7.19	-3.12	-9.66	0.23	-9.11	VERDADERO
48.00	-2.86	-9.47	2.39	-7.04	-3.12	-9.73	0.28	-9.15	VERDADERO
49.00	-2.99	-9.63	2.59	-6.89	-3.14	-9.78	0.32	-9.16	VERDADERO
50.00	-3.13	-9.76	2.75	-6.73	-3.19	-9.82	0.35	-9.14	VERDADERO
51.00	-3.25	-9.85	2.86	-6.59	-3.23	-9.83	0.34	-9.11	VERDADERO
52.00	-3.41	-9.95	3.02	-6.34	-3.34	-9.88	0.42	-8.93	VERDADERO
53.00	-3.59	-10.02	3.14	-6.08	-3.48	-9.92	0.50	-8.72	VERDADERO
54.00	-3.75	-10.05	3.23	-5.81	-3.62	-9.93	0.57	-8.47	VERDADERO
55.00	-3.88	-10.03	3.21	-5.60	-3.75	-9.89	0.54	-8.27	VERDADERO
56.00	-3.99	-9.93	3.10	-5.43	-3.84	-9.78	0.43	-8.10	VERDADERO
57.00	-4.05	-9.75	2.88	-5.32	-3.91	-9.61	0.22	-7.98	VERDADERO
58.00	-4.07	-9.50	2.56	-5.24	-3.95	-9.37	-0.07	-7.88	VERDADERO
59.00	-4.07	-9.18	2.14	-5.23	-3.96	-9.07	-0.46	-7.82	VERDADERO
60.00	-4.03	-8.78	1.60	-5.26	-3.95	-8.71	-0.95	-7.81	VERDADERO
61.00	-3.94	-8.30	0.96	-5.35	-3.90	-8.26	-1.53	-7.84	VERDADERO
62.00	-3.83	-7.75	0.22	-5.48	-3.83	-7.76	-2.20	-7.90	VERDADERO
63.00	-3.68	-7.13	-0.65	-5.67	-3.74	-7.19	-2.98	-8.01	VERDADERO
64.00	-3.50	-6.43	-1.62	-5.92	-3.62	-6.55	-3.86	-8.16	VERDADERO
65.00	-3.26	-5.63	-2.70	-6.21	-3.44	-5.82	-4.84	-8.35	VERDADERO
66.00	-3.00	-4.77	-3.89	-6.56	-3.26	-5.03	-5.92	-8.58	VERDADERO
67.00	-2.00	-3.09	-3.44	-4.96	-2.20	-3.29	-4.85	-6.37	VERDADERO
67.50	-1.89	-2.56	-2.42	-3.23	-2.17	-2.84	-3.29	-4.10	VERDADERO
68.50	0.06	0.01	-0.01	-0.07	0.06	0.01	-0.01	-0.07	VERDADERO

COMPROBACIÓN TENSIONAL DEL TABLERO

FCK HORMIGÓN	40	Mpa

Intervalo de tensiones admisibles

	CUASIP	FREC	CARACT
T(-) COMPRESIÓN	-24.0	-24.0	-24.0
T(+) TRACCIÓN	0.0	3.5	5.0

	FREC_01				FREC_02				CUMPLE
	Fibra Superior		Fibra Inferior		Fibra Superior		Fibra Inferior		
ABCISA (m)	T+ (Mpa)	T- (Mpa)	T+ (Mpa)	T- (Mpa)	T+ (Mpa)	T- (Mpa)	T+ (Mpa)	T- (Mpa)	FREC?
0.00	0.00	0.00	0.00	0.00	0.00	0.00	0.00	0.00	VERDADERO
0.50	-1.57	-1.63	-3.47	-3.54	-1.93	-1.99	-4.25	-4.32	VERDADERO
1.50	-1.89	-2.36	-4.44	-5.05	-2.13	-2.60	-5.80	-6.41	VERDADERO
2.00	-2.78	-3.46	-5.83	-6.80	-3.12	-3.80	-7.73	-8.70	VERDADERO
3.00	-3.13	-4.20	-4.80	-6.31	-3.40	-4.46	-6.83	-8.34	VERDADERO
4.00	-3.42	-4.87	-3.90	-5.96	-3.60	-5.05	-6.05	-8.11	VERDADERO
5.00	-3.68	-5.49	-3.03	-5.61	-3.80	-5.61	-5.29	-7.86	VERDADERO
6.00	-3.90	-6.05	-2.26	-5.32	-3.96	-6.11	-4.61	-7.66	VERDADERO
7.00	-4.08	-6.54	-1.59	-5.08	-4.09	-6.55	-4.01	-7.50	VERDADERO
8.00	-4.22	-6.96	-1.03	-4.94	-4.18	-6.92	-3.53	-7.44	VERDADERO
9.00	-4.33	-7.34	-0.53	-4.80	-4.26	-7.26	-3.08	-7.35	VERDADERO
10.00	-4.41	-7.65	-0.11	-4.71	-4.30	-7.54	-2.71	-7.31	VERDADERO
11.00	-4.43	-7.88	0.18	-4.73	-4.30	-7.75	-2.47	-7.37	VERDADERO
12.00	-4.44	-8.08	0.43	-4.74	-4.30	-7.94	-2.23	-7.41	VERDADERO
13.00	-4.41	-8.21	0.60	-4.80	-4.27	-8.07	-2.07	-7.48	VERDADERO
14.00	-4.35	-8.29	0.69	-4.92	-4.21	-8.15	-1.99	-7.59	VERDADERO
15.00	-4.23	-8.29	0.65	-5.13	-4.10	-8.16	-2.03	-7.80	VERDADERO
16.00	-4.10	-8.25	0.58	-5.33	-3.99	-8.14	-2.07	-7.98	VERDADERO
17.00	-3.97	-8.21	0.50	-5.53	-3.90	-8.13	-2.10	-8.12	VERDADERO
18.00	-3.82	-8.12	0.40	-5.71	-3.80	-8.10	-2.11	-8.23	VERDADERO
19.00	-3.73	-8.07	0.36	-5.81	-3.79	-8.13	-2.04	-8.21	VERDADERO
20.00	-3.64	-8.00	0.29	-5.91	-3.79	-8.15	-1.97	-8.17	VERDADERO
21.00	-3.55	-7.92	0.20	-6.00	-3.82	-8.18	-1.89	-8.10	VERDADERO
22.00	-3.45	-7.80	0.10	-6.08	-3.84	-8.19	-1.80	-7.99	VERDADERO
23.00	-3.39	-7.70	-0.01	-6.15	-3.92	-8.23	-1.70	-7.83	VERDADERO
24.00	-3.32	-7.58	-0.14	-6.21	-4.02	-8.28	-1.59	-7.66	VERDADERO
25.00	-3.23	-7.43	-0.30	-6.27	-4.10	-8.30	-1.49	-7.46	VERDADERO
26.00	-3.17	-7.30	-0.45	-6.32	-4.24	-8.37	-1.35	-7.22	VERDADERO
27.00	-3.12	-7.15	-0.63	-6.36	-4.40	-8.43	-1.22	-6.95	VERDADERO
28.00	-3.03	-6.96	-0.84	-6.43	-4.53	-8.46	-1.10	-6.69	VERDADERO
29.00	-2.98	-6.79	-1.04	-6.47	-4.73	-8.54	-0.94	-6.37	VERDADERO
30.00	-2.90	-6.60	-1.29	-6.54	-4.91	-8.60	-0.82	-6.07	VERDADERO
31.00	-2.46	-6.09	-1.96	-7.12	-4.68	-8.31	-1.18	-6.34	VERDADERO
32.00	-1.75	-5.34	-2.94	-8.04	-4.13	-7.72	-1.90	-7.00	VERDADERO
33.00	-0.06	-3.47	-2.83	-7.23	-2.32	-5.72	-1.54	-5.94	VERDADERO
33.75	0.88	-2.49	-4.05	-8.42	-1.43	-4.79	-2.69	-7.05	VERDADERO
34.50	2.03	-1.40	-5.46	-9.90	-0.30	-3.72	-4.07	-8.52	VERDADERO

COMPROBACIÓN TENSIONAL DEL TABLERO

FCK HORMIGÓN	40	Mpa

Intervalo de tensiones admisibles

	CUASIP	FREC	CARACT
T(-) COMPRESIÓN	-24.0	-24.0	-24.0
T(+) TRACCIÓN	0.0	3.5	5.0

	FREC_01				FREC_02				CUMPLE
	Fibra Superior		Fibra Inferior		Fibra Superior		Fibra Inferior		
ABCISA (m)	T+ (Mpa)	T- (Mpa)	T+ (Mpa)	T- (Mpa)	T+ (Mpa)	T- (Mpa)	T+ (Mpa)	T- (Mpa)	FREC?
35.25	0.90	-2.47	-4.12	-8.48	-1.40	-4.77	-2.77	-7.13	VERDADERO
36.00	-0.66	-4.20	-4.54	-9.58	-3.15	-6.69	-3.36	-8.40	VERDADERO
37.00	-1.82	-5.40	-2.94	-8.04	-4.22	-7.80	-1.91	-7.00	VERDADERO
38.00	-2.54	-6.16	-1.91	-7.06	-4.77	-8.39	-1.12	-6.27	VERDADERO
39.00	-2.93	-6.62	-1.28	-6.53	-4.95	-8.63	-0.81	-6.05	VERDADERO
40.00	-3.00	-6.81	-1.05	-6.47	-4.75	-8.56	-0.95	-6.37	VERDADERO
41.00	-3.05	-6.97	-0.89	-6.47	-4.55	-8.48	-1.15	-6.73	VERDADERO
42.00	-3.12	-7.14	-0.67	-6.40	-4.40	-8.42	-1.27	-7.00	VERDADERO
43.00	-3.18	-7.30	-0.48	-6.34	-4.26	-8.37	-1.38	-7.24	VERDADERO
44.00	-3.23	-7.42	-0.37	-6.34	-4.10	-8.29	-1.58	-7.54	VERDADERO
45.00	-3.31	-7.57	-0.20	-6.26	-4.00	-8.26	-1.66	-7.72	VERDADERO
46.00	-3.39	-7.70	-0.05	-6.18	-3.92	-8.23	-1.74	-7.87	VERDADERO
47.00	-3.44	-7.78	0.01	-6.17	-3.82	-8.16	-1.92	-8.09	VERDADERO
48.00	-3.53	-7.89	0.14	-6.06	-3.79	-8.15	-1.97	-8.17	VERDADERO
49.00	-3.63	-7.99	0.25	-5.95	-3.78	-8.14	-2.02	-8.22	VERDADERO
50.00	-3.74	-8.07	0.34	-5.83	-3.80	-8.13	-2.07	-8.24	VERDADERO
51.00	-3.83	-8.13	0.39	-5.73	-3.81	-8.11	-2.14	-8.25	VERDADERO
52.00	-3.97	-8.20	0.51	-5.52	-3.89	-8.13	-2.09	-8.11	VERDADERO
53.00	-4.11	-8.27	0.61	-5.30	-4.00	-8.16	-2.03	-7.94	VERDADERO
54.00	-4.24	-8.30	0.71	-5.07	-4.11	-8.17	-1.95	-7.73	VERDADERO
55.00	-4.34	-8.29	0.71	-4.90	-4.21	-8.15	-1.96	-7.57	VERDADERO
56.00	-4.41	-8.22	0.64	-4.77	-4.27	-8.08	-2.03	-7.44	VERDADERO
57.00	-4.45	-8.09	0.48	-4.70	-4.31	-7.96	-2.18	-7.36	VERDADERO
58.00	-4.44	-7.90	0.25	-4.67	-4.31	-7.77	-2.38	-7.30	VERDADERO
59.00	-4.41	-7.66	-0.07	-4.69	-4.30	-7.55	-2.67	-7.29	VERDADERO
60.00	-4.34	-7.35	-0.48	-4.77	-4.26	-7.28	-3.03	-7.32	VERDADERO
61.00	-4.22	-6.97	-0.97	-4.89	-4.18	-6.93	-3.46	-7.38	VERDADERO
62.00	-4.08	-6.55	-1.55	-5.07	-4.08	-6.55	-3.97	-7.49	VERDADERO
63.00	-3.90	-6.06	-2.22	-5.30	-3.96	-6.12	-4.56	-7.63	VERDADERO
64.00	-3.68	-5.51	-2.98	-5.58	-3.80	-5.63	-5.22	-7.83	VERDADERO
65.00	-3.41	-4.88	-3.83	-5.91	-3.60	-5.07	-5.97	-8.06	VERDADERO
66.00	-3.13	-4.21	-4.76	-6.30	-3.39	-4.47	-6.79	-8.33	VERDADERO
67.00	-2.09	-2.74	-3.95	-4.78	-2.29	-2.94	-5.36	-6.19	VERDADERO
67.50	-1.96	-2.34	-2.70	-3.12	-2.24	-2.62	-3.57	-3.98	VERDADERO
68.50	0.05	0.01	-0.01	-0.05	0.05	0.01	-0.01	-0.05	VERDADERO

COMPROBACIÓN TENSIONAL DEL TABLERO

FCK HORMIGÓN	40	Mpa

Intervalo de tensiones admisibles

	CUASIP	FREC	CARACT
T(-) COMPRESIÓN	-24.0	-24.0	-24.0
T(+) TRACCIÓN	0.0	3.5	5.0

	CUASIP				CUMPLE
	Fibra Superior		Fibra Inferior		
ABCISA (m)	T+ (Mpa)	T- (Mpa)	T+ (Mpa)	T- (Mpa)	CUASIP?
0.00	0.00	0.00	0.00	0.00	VERDADERO
0.50	-1.63	-1.63	-3.47	-3.47	VERDADERO
1.50	-1.96	-2.03	-4.87	-4.95	VERDADERO
2.00	-2.86	-2.96	-6.53	-6.68	VERDADERO
3.00	-3.23	-3.40	-5.94	-6.17	VERDADERO
4.00	-3.56	-3.79	-5.43	-5.76	VERDADERO
5.00	-3.86	-4.15	-4.94	-5.36	VERDADERO
6.00	-4.12	-4.48	-4.50	-5.01	VERDADERO
7.00	-4.34	-4.76	-4.11	-4.72	VERDADERO
8.00	-4.51	-5.00	-3.82	-4.52	VERDADERO
9.00	-4.67	-5.22	-3.53	-4.32	VERDADERO
10.00	-4.78	-5.40	-3.30	-4.18	VERDADERO
11.00	-4.84	-5.53	-3.17	-4.14	VERDADERO
12.00	-4.89	-5.64	-3.03	-4.10	VERDADERO
13.00	-4.90	-5.72	-2.94	-4.10	VERDADERO
14.00	-4.88	-5.76	-2.91	-4.16	VERDADERO
15.00	-4.80	-5.75	-2.97	-4.31	VERDADERO
16.00	-4.71	-5.72	-3.03	-4.46	VERDADERO
17.00	-4.62	-5.69	-3.07	-4.60	VERDADERO
18.00	-4.51	-5.65	-3.11	-4.73	VERDADERO
19.00	-4.46	-5.66	-3.06	-4.78	VERDADERO
20.00	-4.41	-5.68	-3.01	-4.82	VERDADERO
21.00	-4.36	-5.70	-2.95	-4.85	VERDADERO
22.00	-4.30	-5.70	-2.88	-4.87	VERDADERO
23.00	-4.27	-5.74	-2.80	-4.88	VERDADERO
24.00	-4.25	-5.78	-2.71	-4.89	VERDADERO
25.00	-4.20	-5.79	-2.63	-4.90	VERDADERO
26.00	-4.18	-5.84	-2.53	-4.89	VERDADERO
27.00	-4.16	-5.89	-2.42	-4.88	VERDADERO
28.00	-4.11	-5.90	-2.34	-4.89	VERDADERO
29.00	-4.10	-5.95	-2.23	-4.87	VERDADERO
30.00	-4.07	-5.99	-2.16	-4.89	VERDADERO
31.00	-3.73	-5.72	-2.49	-5.31	VERDADERO
32.00	-3.15	-5.20	-3.12	-6.04	VERDADERO
33.00	-1.55	-3.58	-2.68	-5.31	VERDADERO
33.75	-0.71	-2.78	-3.67	-6.36	VERDADERO
34.50	0.33	-1.79	-4.95	-7.70	VERDADERO

COMPROBACIÓN TENSIONAL DEL TABLERO

FCK HORMIGÓN	40	Mpa

Intervalo de tensiones admisibles

	CUASIP	FREC	CARACT
T(-) COMPRESIÓN	-24.0	-24.0	-24.0
T(+) TRACCIÓN	0.0	3.5	5.0

	CUASIP				CUMPLE
	Fibra Superior		Fibra Inferior		
ABCISA (m)	T+ (Mpa)	T- (Mpa)	T+ (Mpa)	T- (Mpa)	CUASIP?
35.25	-0.69	-2.76	-3.73	-6.42	VERDADERO
36.00	-2.21	-4.32	-4.37	-7.38	VERDADERO
37.00	-3.22	-5.27	-3.12	-6.04	VERDADERO
38.00	-3.81	-5.79	-2.43	-5.25	VERDADERO
39.00	-4.10	-6.02	-2.14	-4.87	VERDADERO
40.00	-4.12	-5.98	-2.23	-4.87	VERDADERO
41.00	-4.13	-5.92	-2.38	-4.92	VERDADERO
42.00	-4.16	-5.89	-2.46	-4.91	VERDADERO
43.00	-4.19	-5.85	-2.54	-4.90	VERDADERO
44.00	-4.19	-5.79	-2.69	-4.96	VERDADERO
45.00	-4.23	-5.76	-2.76	-4.94	VERDADERO
46.00	-4.28	-5.74	-2.83	-4.91	VERDADERO
47.00	-4.29	-5.68	-2.97	-4.96	VERDADERO
48.00	-4.34	-5.68	-3.01	-4.91	VERDADERO
49.00	-4.40	-5.67	-3.05	-4.85	VERDADERO
50.00	-4.47	-5.67	-3.08	-4.79	VERDADERO
51.00	-4.52	-5.66	-3.12	-4.74	VERDADERO
52.00	-4.62	-5.69	-3.06	-4.59	VERDADERO
53.00	-4.72	-5.73	-2.99	-4.43	VERDADERO
54.00	-4.81	-5.75	-2.91	-4.26	VERDADERO
55.00	-4.88	-5.76	-2.89	-4.14	VERDADERO
56.00	-4.91	-5.72	-2.91	-4.07	VERDADERO
57.00	-4.90	-5.65	-2.99	-4.06	VERDADERO
58.00	-4.85	-5.54	-3.10	-4.08	VERDADERO
59.00	-4.78	-5.40	-3.28	-4.16	VERDADERO
60.00	-4.67	-5.23	-3.50	-4.29	VERDADERO
61.00	-4.51	-5.00	-3.77	-4.47	VERDADERO
62.00	-4.33	-4.76	-4.10	-4.70	VERDADERO
63.00	-4.12	-4.47	-4.48	-4.99	VERDADERO
64.00	-3.86	-4.15	-4.91	-5.33	VERDADERO
65.00	-3.55	-3.78	-5.39	-5.72	VERDADERO
66.00	-3.22	-3.39	-5.93	-6.16	VERDADERO
67.00	-2.15	-2.25	-4.58	-4.70	VERDADERO
67.50	-2.01	-2.06	-3.01	-3.07	VERDADERO
68.50	0.01	0.01	-0.01	-0.01	VERDADERO

*** CivilCAD 2000 *** Autores: L.M.Callís,J.M.Roig,I.Callís
****

PROYECTO DE SECCIÓN
****

Listado generado el día 05-06-2017 a las 17:08:59.

Nombre del proyecto : seccion_pos

Normativa utilizada (España): Instrucción IAP-1998/IAPF, EHE-2008

MEMORIA DEL PROYECTO
****

Contornos
=========

Contorno 1

Tipo de contorno : real.
Forma : poligonal.

Puntos :
x : 4.650 y : -0.093
x : 4.650 y : -0.293
x : 2.650 y : -0.433
x : 1.950 y : -1.650
x : -1.950 y : -1.650
x : -2.650 y : -0.433
x : -4.650 y : -0.293
x : -4.650 y : -0.093
x : 0.000 y : 0.000

Material : HP-40

Contorno 2

Tipo de contorno : aligeramiento.
Contorno que aligera : 1
Forma : circular.

Centro : -1.270 ,-0.825
Radio : 0.500 m

Contorno 3

Tipo de contorno : aligeramiento.
Contorno que aligera : 1
Forma : circular.

Centro : 0.000 ,-0.825
Radio : 0.500 m

Contorno 4

Tipo de contorno : aligeramiento.
Contorno que aligera : 1
Forma : circular.

Centro : 1.270 ,-0.825
Radio : 0.500 m

Armadura activa 1

Material : Y1860S7
Diámetro de la vaina : 0.090 m
Def. inicial : -0.00780000
Area de la sección de acero : 2400.000 mm2
Coordenadas del centro de la vaina: x : -1.900 y : -1.457

Armadura activa 2

Material : Y1860S7
Diámetro de la vaina : 0.090 m
Def. inicial : -0.00780000
Area de la sección de acero : 2400.000 mm2
Coordenadas del centro de la vaina: x : -1.900 y : -1.279

Armadura activa 3

Material : Y1860S7
Diámetro de la vaina : 0.090 m
Def. inicial : -0.00780000
Area de la sección de acero : 2400.000 mm2
Coordenadas del centro de la vaina: x : -1.900 y : -1.100

Armadura activa 4

Material : Y1860S7
Diámetro de la vaina : 0.090 m
Def. inicial : -0.00780000
Area de la sección de acero : 2400.000 mm2
Coordenadas del centro de la vaina: x : -0.650 y : -1.457

Armadura activa 5

Material : Y1860S7
Diámetro de la vaina : 0.090 m
Def. inicial : -0.00780000
Area de la sección de acero : 2400.000 mm2
Coordenadas del centro de la vaina: x : -0.650 y : -1.279

Armadura activa 6

Material : Y1860S7
Diámetro de la vaina : 0.090 m
Def. inicial : -0.00780000
Area de la sección de acero : 2400.000 mm2
Coordenadas del centro de la vaina: x : -0.650 y : -1.100

Armadura activa 7

```
 Material : Y1860S7
 Diámetro de la vaina : 0.090 m
 Def. inicial : -0.00780000
 Area de la sección de acero : 2400.000 mm2
 Coordenadas del centro de la vaina: x : 0.650  y : -1.457

Armadura activa 8

 Material : Y1860S7
 Diámetro de la vaina : 0.090 m
 Def. inicial : -0.00780000
 Area de la sección de acero : 2400.000 mm2
 Coordenadas del centro de la vaina: x : 0.650  y : -1.279

Armadura activa 9

 Material : Y1860S7
 Diámetro de la vaina : 0.090 m
 Def. inicial : -0.00780000
 Area de la sección de acero : 2400.000 mm2
 Coordenadas del centro de la vaina: x : 0.650  y : -1.100

Armadura activa 10

 Material : Y1860S7
 Diámetro de la vaina : 0.090 m
 Def. inicial : -0.00780000
 Area de la sección de acero : 2400.000 mm2
 Coordenadas del centro de la vaina: x : 1.900  y : -1.457

Armadura activa 11

 Material : Y1860S7
 Diámetro de la vaina : 0.090 m
 Def. inicial : -0.00780000
 Area de la sección de acero : 2400.000 mm2
 Coordenadas del centro de la vaina: x : 1.900  y : -1.279

Armadura activa 12

 Material : Y1860S7
 Diámetro de la vaina : 0.090 m
 Def. inicial : -0.00780000
 Area de la sección de acero : 2400.000 mm2
 Coordenadas del centro de la vaina: x : 1.900  y : -1.100

Materiales
==========

 Material  1 :
 ----------------

    Nombre : HP-40

Tipo : Hormigón.

  Módulo de Young E (T/m2) :                    3152150.00
  Resistencia característica fck(T/m2) :               4081.60
  Coefic. de minoración para situación persistente :       1.500
  Coefic. de minoración para situación accidental :       1.300
  Deformación máxima de compresión :                    0.00350
  Deformación de cambio de tramo en la ley parábola-rectángulo :
0.00200

 Material  2 :
 ----------------

    Nombre : Y1860S7

Tipo : Acero para pretensar.

  Módulo de Young E (T/m2) :                    19387760.00
  Resistencia característica fyk(T/m2) :             173660.00
  Coefic. de minoración para situación persistente :       1.150
  Coefic. de minoración para situación accidental :       1.000
  Deformación máxima de compresión :                    0.03500
  Deformación máxima adicional a la inicial :        -0.01000
  Deformación máxima de tracción :                    -0.03500


Cálculo de comprobación a rotura.
=================================

Hipotesis de carga   1
  N =     0.000   Mx =  4437.734   My =     0.000
Esfuerzos últimos proporcionales a los de cálculo:
  Nu =     2.055   Mxu =  4897.270   Myu =     0.000
  Coef. Seguridad =  1.10355

  Fibra neutra      :  Angulo con eje 'x'      =     0.00 §
                       Interseccion con eje 'y'=   -0.324 m
                       Curvatura               =  0.00883 m-1
  Contorno principal:  Def. max.=0.00286   Tens. max.=  231.29 Kp/cm2
                       Def. min.=-0.01170   Tens. min.=    0.00 Kp/cm2
  Armadura activa  1:  Def. max.=-0.01780   Tens. max.=-15100.87 Kp/cm2
  Armadura activa  2:  Def. max.=-0.01623   Tens. max.=-15100.87 Kp/cm2
  Armadura activa  3:  Def. max.=-0.01465   Tens. max.=-15100.87 Kp/cm2
  Armadura activa  4:  Def. max.=-0.01780   Tens. max.=-15100.87 Kp/cm2
  Armadura activa  5:  Def. max.=-0.01623   Tens. max.=-15100.87 Kp/cm2
  Armadura activa  6:  Def. max.=-0.01465   Tens. max.=-15100.87 Kp/cm2
  Armadura activa  7:  Def. max.=-0.01780   Tens. max.=-15100.87 Kp/cm2
  Armadura activa  8:  Def. max.=-0.01623   Tens. max.=-15100.87 Kp/cm2
  Armadura activa  9:  Def. max.=-0.01465   Tens. max.=-15100.87 Kp/cm2
  Armadura activa 10:  Def. max.=-0.01780   Tens. max.=-15100.87 Kp/cm2
  Armadura activa 11:  Def. max.=-0.01623   Tens. max.=-15100.87 Kp/cm2
  Armadura activa 12:  Def. max.=-0.01465   Tens. max.=-15100.87 Kp/cm2

Posición de la resultante de las tensiones de rotura:
  Tracción = -4349.051T   x =   -0.000m y =   -1.279m
  Compresión = 4351.106T   x =   -0.000m y =   -0.153m
```

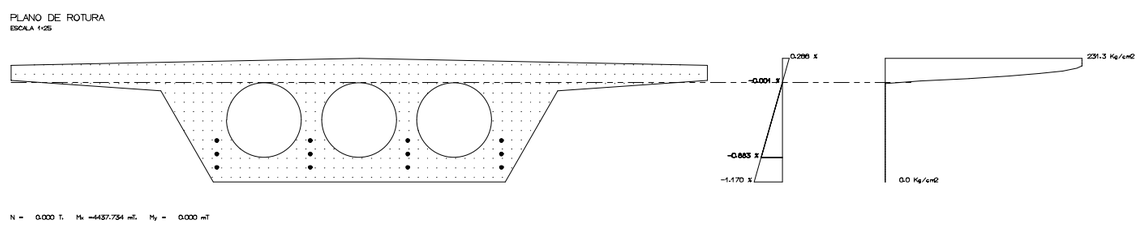


```
    *** CivilCAD 2000 *** Autores: L.M.Callís,J.M.Roig,I.Callís
*************************************************************

PROYECTO DE SECCIÓN
*******************

Listado generado el día 05-06-2017 a las 17:16:59.

Nombre del proyecto : seccion_neg

    Normativa utilizada (España): Instrucción IAP-1998/IAPF, EHE-2008

MEMORIA DEL PROYECTO
********************

Contornos
=========

Contorno 1

 Tipo de contorno : real.
 Forma : poligonal.

  Puntos :
  x : 4.650  y : -0.093
  x : 4.650  y : -0.293
  x : 2.650  y : -0.433
  x : 1.950  y : -1.650
  x : -1.950  y : -1.650
  x : -2.650  y : -0.433
  x : -4.650  y : -0.293
  x : -4.650  y : -0.093
  x : 0.000  y : 0.000

 Material : HP-40

Armadura activa 1

 Material : Y1860S7
 Diámetro de la vaina : 0.090 m
 Def. inicial : -0.00780000
 Area de la sección de acero : 2400.000 mm2
 Coordenadas del centro de la vaina: x : -1.900  y : -0.533

Armadura activa 2

 Material : Y1860S7
 Diámetro de la vaina : 0.090 m
 Def. inicial : -0.00780000
 Area de la sección de acero : 2400.000 mm2
 Coordenadas del centro de la vaina: x : -1.900  y : -0.353

Armadura activa 3

 Material : Y1860S7
 Diámetro de la vaina : 0.090 m
 Def. inicial : -0.00780000
 Area de la sección de acero : 2400.000 mm2
```

Coordenadas del centro de la vaina: x : -1.900 y : -0.173

Armadura activa 4

Material : Y1860S7
Diámetro de la vaina : 0.090 m
Def. inicial : -0.00780000
Area de la sección de acero : 2400.000 mm2
Coordenadas del centro de la vaina: x : -0.650 y : -0.533

Armadura activa 5

Material : Y1860S7
Diámetro de la vaina : 0.090 m
Def. inicial : -0.00780000
Area de la sección de acero : 2400.000 mm2
Coordenadas del centro de la vaina: x : -0.650 y : -0.353

Armadura activa 6

Material : Y1860S7
Diámetro de la vaina : 0.090 m
Def. inicial : -0.00780000
Area de la sección de acero : 2400.000 mm2
Coordenadas del centro de la vaina: x : -0.650 y : -0.173

Armadura activa 7

Material : Y1860S7
Diámetro de la vaina : 0.090 m
Def. inicial : -0.00780000
Area de la sección de acero : 2400.000 mm2
Coordenadas del centro de la vaina: x : 0.650 y : -0.533

Armadura activa 8

Material : Y1860S7
Diámetro de la vaina : 0.090 m
Def. inicial : -0.00780000
Area de la sección de acero : 2400.000 mm2
Coordenadas del centro de la vaina: x : 0.650 y : -0.353

Armadura activa 9

Material : Y1860S7
Diámetro de la vaina : 0.090 m
Def. inicial : -0.00780000
Area de la sección de acero : 2400.000 mm2
Coordenadas del centro de la vaina: x : 0.650 y : -0.173

Armadura activa 10

Material : Y1860S7
Diámetro de la vaina : 0.090 m
Def. inicial : -0.00780000
Area de la sección de acero : 2400.000 mm2
Coordenadas del centro de la vaina: x : 1.900 y : -0.533

Armadura activa 11

Material : Y1860S7
Diámetro de la vaina : 0.090 m
Def. inicial : -0.00780000
Area de la sección de acero : 2400.000 mm2
Coordenadas del centro de la vaina: x : 1.900 y : -0.353

Armadura activa 12

Material : Y1860S7
Diámetro de la vaina : 0.090 m
Def. inicial : -0.00780000
Area de la sección de acero : 2400.000 mm2
Coordenadas del centro de la vaina: x : 1.900 y : -0.173

Materiales
==========

Material 1 :

Nombre : HP-40

Tipo : Hormigón.

Módulo de Young E (T/m2) : 3152150.00
Resistencia característica fck(T/m2) : 4081.60
Coefic. de minoración para situación persistente : 1.500
Coefic. de minoración para situación accidental : 1.300
Deformación máxima de compresión : 0.00350
Deformación de cambio de tramo en la ley parábola-rectángulo : 0.00200

Material 2 :

Nombre : Y1860S7

Tipo : Acero para pretensar.

Módulo de Young E (T/m2) : 19387760.00
Resistencia característica fyk(T/m2) : 173660.00
Coefic. de minoración para situación persistente : 1.150
Coefic. de minoración para situación accidental : 1.000
Deformación máxima de compresión : 0.03500
Deformación máxima adicional a la inicial : -0.01000
Deformación máxima de tracción : -0.03500

Cálculo de comprobación a rotura.
==========

Hipotesis de carga 1
N = 0.000 Mx = -4355.000 My = 0.000
Esfuerzos últimos proporcionales a los de cálculo:
Nu = -3.795 Mxu = -4606.965 Myu = 0.000
Coef. Seguridad = 1.05786

```
  Fibra neutra      :  Angulo con eje 'x'      =   180.00 §
                       Interseccion con eje 'y'=   -1.093 m
                       Curvatura               =  0.00628 m-1
  Contorno principal:  Def. max.=0.00350   Tens. max.=  231.29 Kp/cm2
                       Def. min.=-0.00687   Tens. min.=    0.00 Kp/cm2
  Armadura activa  1:  Def. max.=-0.01132   Tens. max.=-15100.87 Kp/cm2
  Armadura activa  2:  Def. max.=-0.01245   Tens. max.=-15100.87 Kp/cm2
  Armadura activa  3:  Def. max.=-0.01358   Tens. max.=-15100.87 Kp/cm2
  Armadura activa  4:  Def. max.=-0.01132   Tens. max.=-15100.87 Kp/cm2
  Armadura activa  5:  Def. max.=-0.01245   Tens. max.=-15100.87 Kp/cm2
  Armadura activa  6:  Def. max.=-0.01358   Tens. max.=-15100.87 Kp/cm2
  Armadura activa  7:  Def. max.=-0.01132   Tens. max.=-15100.87 Kp/cm2
  Armadura activa  8:  Def. max.=-0.01245   Tens. max.=-15100.87 Kp/cm2
  Armadura activa  9:  Def. max.=-0.01358   Tens. max.=-15100.87 Kp/cm2
  Armadura activa 10:  Def. max.=-0.01132   Tens. max.=-15100.87 Kp/cm2
  Armadura activa 11:  Def. max.=-0.01245   Tens. max.=-15100.87 Kp/cm2
  Armadura activa 12:  Def. max.=-0.01358   Tens. max.=-15100.87 Kp/cm2

Posición de la resultante de las tensiones de rotura:
  Tracción = -4349.051T   x =   -0.000m y =   -0.353m
  Compresión = 4345.255T   x =    0.000m y =   -1.413m
```

PLANO DE ROTURA
ESCALA 1:25

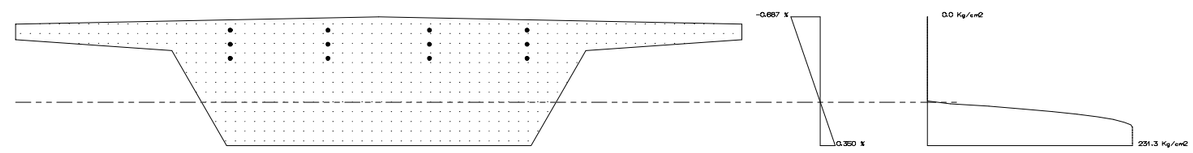

N = 0.000 T. Mx =-4355.000 mT. My = 0.000 mT

COMPROBACIÓN A ROTURA POR FLEXIÓN

Se comprueba el ELU de rotura por flexión en las secciones crícitas del tablero. Al momento de diseño obtenido se le resta la componente correspondiente al momento isostático del pretensado

SECCIÓN	ABCISA (m)	Md1 (kN*m)	Axil Pret. (kN)	Prof Pret (m) (*)	Prof CG (m)	Md2 (kN*m)
VANO MAX Md+	15.00	23433.00	-33614.00	1.28	0.68	**43534.17**
PILA	34.50	-31147.00	-31545.00	0.35	0.72	**-42724.02**

(*) centro de gravedad de las tres familias
Md1 -> Incluyendo el efecto del pretensado isostático+hiperestatico
Md2 -> Incluyendo sólo el efecto del pretensado hiperestatico

MOMENTOS ÚLTIMOS RESISTENTES OBTENIDOS

Sin tener en cuenta la colaboración de la armadura pasiva longitudinal

SECCIÓN	ABCISA (m)	Mu (kN*m)	ratio Mu/Md
VANO MAX Md+	15.00	**48039.57**	**1.10**
PILA	34.50	**-45194.33**	**1.06**

ARMADO DEL VOLADIZO (ARMADO DE FLEXIÓN)

TABLERO E1

CARGA

P.PROPIO

Espesor en punta (cm)	20	cm		
Espesor en arranque (cm)	38	cm		
Longitud del voladizo (m)	2	m (*)		
(*) pésimo de cálculo			brazo	
Peso parte recta	1.00	tn/m		1.00 m
Peso parte triangular	0.45	tn/m		0.67 m
Momento de peso propio	1.30	tn*m/m		

PAVIMENTO

Ancho de barrera	65	cm		
Espesor de pavimento (teo)	5	cm		
			brazo	
Peso de pavimento	0.16	tn/m		0.68 m
Momento de pavimento	0.16	tn*m/m		

SOBRECARGA DE USO

Momento de sobrecarga	1.80	tn*m/m

ACERA+BARRERA

Peso total (tn/m)	0.7	tn/m
Distancia CG a borde	0.2	m
Momento de la barrera	1.26	tn*m/m

CARRO

Rueda	Distancia a borde voladizo (*) m	tn*m
1	1.15	4.77
2	1.15	1.79
3	3.15	0.00
4	3.15	0.00
Momento del carro		6.57 tn*m/m

MOMENTO TOTAL EN SERVICIO	**11.09**	**Tn*m/m**
MOMENTO TOTAL DE DISEÑO	**14.97**	**Tn*m/m**

Armadura de cálculo aproximada	**11.03**	**cm2/m**

Armadura de cálculo exacta (SOLVER)	**10.61**	**cm2/m**

DATOS DE ENTRADA

RESISTENCIA CARACTERISTICA DEL HORMIGON	400.00	KP/CM2
COEFICIENTE DE MINORACIÓN DEL HORMIGÓN	1.50	
RESISTENCIA DE CÁLCULO DEL HORMIGÓN	266.67	KP/CM3
F1CD	160.00	KP/CM2
FCTM	3.51	N/MM2
LIMITE ELASTICO DEL ACERO	5100.00	KP/CM2
COEFICIENTE DE MINORACION	1.15	
LIMITE ELASTICO DE CALCULO	4434.78	KP/CM2
LIMITE DE CALCULO A CORTE	4100.00	KP/CM2
ESVIAJE DE LA ARMADURA TRANSVERSAL	0.00	radianes
Datos para cálculo a rasante		
ESPESOR DEL VOLADIZO EN ARRANQUE	0.38	M
LONGITUD DE CADA VOLADIZO	2.00	M
ANCHO TOTAL DE TABLERO (LOSA SUP)	9.30	M
cm2 totales de armadura activa longitudinal	288.00	cm2

AUTOVÍA DE ALMANZORA. TRAMO: CUCADOR-ENLACE AL-7106 ESTRUCTURA E1 DIMENSIONAMIENTO ARMADURA PASIVA TABLERO

CORTANTES DE SERVICIO

	ABSCISA	P.PROPIO	C.PERMA	SOBRECARGA TOTAL POSITIVO	SOBRECARGA TOTAL NEGATIVO	PRETENSADO Vpd + Hiperest.	ASIENTOS DIFERENCIALES POSITIVO	ASIENTOS DIFERENCIALES NEGATIVO	GRADIENTE TÉRMICO	VRD (+)	VRD(-)	VRD(ABS)
ESTRIBO 1	0.00	229.05	36.17	157.79	-18.34	-132.57	0.00	0.00	23.17	459.34	200.72	459.34
	1.00	199.60	33.34	150.04	-18.36	-124.22	0.00	0.00	23.17	413.65	165.46	413.65
	1.50	188.24	31.92	150.04	-18.36	-115.83	0.00	0.00	23.17	404.79	156.60	404.79
	2.50	171.48	29.09	142.43	-18.51	-107.40	0.00	0.00	23.17	376.50	138.38	376.50
	3.50	154.73	26.25	134.99	-18.82	-90.42	0.00	0.00	23.17	356.99	128.49	356.99
	4.50	137.98	23.42	127.71	-20.35	-81.87	0.00	0.00	23.17	329.27	108.54	329.27
	5.50	121.22	20.58	120.61	-24.69	-73.29	0.00	0.00	23.17	301.83	84.82	301.83
	6.50	104.47	17.75	113.69	-29.16	-64.66	0.00	0.00	23.17	274.66	60.96	274.66
	7.50	87.72	14.91	106.94	-33.77	-47.30	0.00	0.00	23.17	256.47	45.66	256.47
	8.50	70.97	12.08	100.37	-38.51	-38.56	0.00	0.00	23.17	229.90	21.56	229.90
	9.50	54.21	9.24	93.99	-43.36	-29.79	0.00	0.00	23.17	203.62	-2.66	203.62
	10.50	37.46	6.41	87.80	-48.34	-12.12	0.00	0.00	23.17	186.48	-18.15	186.48
	11.50	20.71	3.57	81.79	-53.42	-3.23	0.00	0.00	23.17	160.82	-42.57	160.82
	12.50	3.95	0.74	75.97	-58.61	5.70	0.00	0.00	23.17	135.45	-67.09	135.45
	13.50	-12.80	-2.10	70.35	-63.90	14.67	0.00	0.00	23.17	110.39	-91.70	110.39
	14.50	-29.55	-4.93	64.93	-69.28	32.72	0.00	0.00	23.17	94.67	-107.36	107.36
	15.50	-46.30	-7.77	59.70	-74.75	51.74	0.00	0.00	23.17	80.18	-122.17	122.17
	16.50	-63.06	-10.60	54.66	-80.30	70.80	0.00	0.00	23.17	66.01	-137.04	137.04
	17.50	-79.81	-13.44	49.83	-85.93	108.70	0.00	0.00	23.17	70.94	-133.18	133.18
	18.50	-96.56	-16.27	45.20	-91.62	127.42	0.00	0.00	23.17	56.97	-148.58	148.58
	19.50	-113.32	-19.11	40.77	-97.37	146.04	0.00	0.00	23.17	43.16	-164.18	164.18
	20.50	-130.07	-21.94	36.54	-103.18	164.54	0.00	0.00	23.17	29.51	-179.96	179.96
	21.50	-146.82	-24.78	32.51	-109.03	201.21	0.00	0.00	23.17	34.29	-177.63	177.63
	22.50	-163.57	-27.61	28.69	-114.92	219.41	0.00	0.00	23.17	20.89	-193.82	193.82
	23.50	-180.33	-30.45	25.07	-120.84	237.50	0.00	0.00	23.17	7.65	-210.17	210.17
	24.50	-197.08	-33.28	21.65	-126.78	273.32	0.00	0.00	23.17	12.42	-208.82	208.82
	25.50	-213.83	-36.11	18.44	-132.74	291.05	0.00	0.00	23.17	-0.63	-225.58	225.58
	26.50	-230.59	-38.95	15.43	-138.71	308.66	0.00	0.00	23.17	-13.53	-242.47	242.47
	27.50	-247.34	-41.78	12.62	-144.68	343.51	0.00	0.00	23.17	-8.92	-242.13	242.13
	28.50	-264.09	-44.62	10.02	-150.64	360.74	0.00	0.00	23.17	-21.64	-259.38	259.38
	29.50	-280.84	-47.45	7.62	-156.58	305.40	0.00	0.00	23.17	-106.67	-349.18	349.18
	30.50	-297.60	-50.29	5.41	-162.49	249.93	0.00	0.00	23.17	-191.55	-439.08	439.08
	31.50	-314.35	-53.12	3.41	-172.32	140.32	0.00	0.00	23.17	-330.31	-588.39	588.39
	32.50	-331.10	-55.96	1.61	-178.03	86.27	0.00	0.00	23.17	-413.25	-676.61	676.61
	33.25	-348.14	-58.08	0.96	-179.98	32.72	0.00	0.00	23.17	-493.54	-758.67	758.67
PILA 1	34.00	-365.18	-60.21	0.95	-185.70	32.72	0.00	0.00	23.17	-519.43	-792.25	792.25

06/06/2017 ACL Diseño y Cálculo de Estructuras

COMPROBACIONES CORTANTE

	ABSCISA	CANTO	AREA DE HORMIGÓN	FUERZA PRETENSADO FINAL	scd^l	K EHE-08	ANCHURA NETA MÍNIMA DEL ALMA	CANTO UTIL	cotgq	VU1	CUMPLE?	VRD/VU1
ESTRIBO 1	0.00	1.65	8.91	3304.68	-370.78	1.14	4.00	1.55	1.00	5649.66	VERDADERO	0.08
	1.00	1.65	8.91	3312.01	-371.61	1.14	4.00	1.55	1.00	5651.19	VERDADERO	0.07
	1.50	1.65	6.57	3319.34	-505.10	1.19	1.85	1.55	1.00	2728.52	VERDADERO	0.15
	2.50	1.65	6.57	3326.65	-506.22	1.19	1.85	1.55	1.00	2729.47	VERDADERO	0.14
	3.50	1.65	6.57	3341.24	-508.44	1.19	1.85	1.55	1.00	2731.38	VERDADERO	0.13
	4.50	1.65	6.57	3348.52	-509.54	1.19	1.85	1.55	1.00	2732.34	VERDADERO	0.12
	5.50	1.65	6.57	3355.79	-510.65	1.19	1.85	1.55	1.00	2733.29	VERDADERO	0.11
	6.50	1.65	6.57	3363.04	-511.75	1.19	1.85	1.55	1.00	2734.24	VERDADERO	0.10
	7.50	1.65	6.57	3377.51	-513.96	1.19	1.85	1.55	1.00	2736.13	VERDADERO	0.09
	8.50	1.65	6.57	3384.73	-515.05	1.19	1.85	1.55	1.00	2737.08	VERDADERO	0.08
	9.50	1.65	6.57	3391.93	-516.15	1.19	1.85	1.55	1.00	2738.02	VERDADERO	0.07
	10.50	1.65	6.57	3406.30	-518.34	1.19	1.85	1.55	1.00	2739.90	VERDADERO	0.07
	11.50	1.65	6.57	3413.46	-519.43	1.19	1.85	1.55	1.00	2740.84	VERDADERO	0.06
	12.50	1.65	6.57	3420.62	-520.51	1.20	1.85	1.55	1.00	2741.77	VERDADERO	0.05
	13.50	1.65	6.57	3427.76	-521.60	1.20	1.85	1.55	1.00	2742.71	VERDADERO	0.04
	14.50	1.65	6.57	3441.30	-523.66	1.20	1.85	1.55	1.00	2744.48	VERDADERO	0.04
	15.50	1.65	6.57	3446.07	-524.39	1.20	1.85	1.55	1.00	2745.10	VERDADERO	0.04
	16.50	1.65	6.57	3450.17	-525.01	1.20	1.85	1.55	1.00	2745.64	VERDADERO	0.05
	17.50	1.65	6.57	3442.75	-523.88	1.20	1.85	1.55	1.00	2744.67	VERDADERO	0.05
	18.50	1.65	6.57	3433.42	-522.46	1.20	1.85	1.55	1.00	2743.45	VERDADERO	0.05
	19.50	1.65	6.57	3424.02	-521.03	1.20	1.85	1.55	1.00	2742.22	VERDADERO	0.06
	20.50	1.65	6.57	3414.53	-519.59	1.19	1.85	1.55	1.00	2740.98	VERDADERO	0.07
	21.50	1.65	6.57	3395.31	-516.66	1.19	1.85	1.55	1.00	2738.46	VERDADERO	0.06
	22.50	1.65	6.57	3385.56	-515.18	1.19	1.85	1.55	1.00	2737.18	VERDADERO	0.07
	23.50	1.65	6.57	3375.74	-513.69	1.19	1.85	1.55	1.00	2735.90	VERDADERO	0.08
	24.50	1.65	6.57	3355.85	-510.66	1.19	1.85	1.55	1.00	2733.30	VERDADERO	0.08
	25.50	1.65	6.57	3345.80	-509.13	1.19	1.85	1.55	1.00	2731.98	VERDADERO	0.08
	26.50	1.65	6.57	3335.68	-507.59	1.19	1.85	1.55	1.00	2730.65	VERDADERO	0.09
	27.50	1.65	6.57	3315.22	-504.48	1.19	1.85	1.55	1.00	2727.98	VERDADERO	0.09
	28.50	1.65	6.57	3304.88	-502.90	1.19	1.85	1.55	1.00	2726.62	VERDADERO	0.10
	29.50	1.65	6.57	3296.17	-501.58	1.19	1.85	1.55	1.00	2725.48	VERDADERO	0.13
	30.50	1.65	6.57	3281.94	-499.41	1.19	1.85	1.55	1.00	2723.62	VERDADERO	0.16
	31.50	1.65	6.57	3250.99	-494.70	1.19	1.85	1.55	1.00	2719.57	VERDADERO	0.22
	32.50	1.65	6.57	3234.31	-492.16	1.18	1.85	1.55	1.00	2717.38	VERDADERO	0.25
	33.25	1.65	8.91	3216.72	-360.91	1.14	4.00	1.55	1.00	5631.30	VERDADERO	0.13
PILA 1	34.00	1.65	8.91	3216.72	-360.91	1.14	4.00	1.55	1.00	5631.30	VERDADERO	0.14

AUTOVÍA DE ALMANZORA. TRAMO: CUCADOR-ENLACE AL-7106 ESTRUCTURA E1 DIMENSIONAMIENTO ARMADURA PASIVA TABLERO

COMPROBACIONES CORTANTE 2

	ABSCISA	x	As cm2	ρ_L	$cotg\,\theta_e$	$cotg\,\theta > cotg\,\theta_e$	β	VCU	VSU necesario	As necesaria cm2/m	As minima cm2/m	AS CM2/M Suma de todas las ramas	SEPARACION MAXIMA ESTRIBOS	AS CM2/M CUANTÍA DISPUESTA	CUMPLE?
ESTRIBO 1	0.00	1.36	0.00	0.005	1.43	FALSO	0.54	304.04	155.30	27.15	52.03	**52.03**	0.30	67.86	VERDADERO
	1.00	1.36	0.00	0.005	1.43	FALSO	0.53	304.19	109.46	19.14	52.03	**52.03**	0.30	67.86	VERDADERO
	1.50	1.36	0.00	0.010	1.56	FALSO	0.47	165.15	239.64	41.90	24.07	**41.90**	0.30	67.86	VERDADERO
	2.50	1.36	0.00	0.010	1.56	FALSO	0.47	165.22	211.28	36.94	24.07	**36.94**	0.30	67.86	VERDADERO
	3.50	1.36	0.00	0.010	1.56	FALSO	0.47	165.35	191.63	33.51	24.07	**33.51**	0.30	67.86	VERDADERO
	4.50	1.36	0.00	0.010	1.57	FALSO	0.47	165.42	163.85	28.65	24.07	**28.65**	0.30	67.86	VERDADERO
	5.50	1.36	0.00	0.010	1.57	FALSO	0.47	165.49	136.34	23.84	24.07	**24.07**	0.30	67.86	VERDADERO
	6.50	1.36	0.00	0.010	1.57	FALSO	0.47	165.55	109.11	19.08	24.07	**24.07**	0.30	45.24	VERDADERO
	7.50	1.36	0.00	0.010	1.57	FALSO	0.47	165.69	90.78	15.87	24.07	**24.07**	0.30	45.24	VERDADERO
	8.50	1.36	0.00	0.010	1.57	FALSO	0.47	165.75	64.15	11.22	24.07	**24.07**	0.30	45.24	VERDADERO
	9.50	1.36	0.00	0.010	1.57	FALSO	0.47	165.82	37.80	6.61	24.07	**24.07**	0.30	45.24	VERDADERO
	10.50	1.36	0.00	0.010	1.57	FALSO	0.47	165.95	20.53	3.59	24.07	**24.07**	0.30	45.24	VERDADERO
	11.50	1.36	0.00	0.010	1.57	FALSO	0.47	166.02	-5.20	-0.91	24.07	**24.07**	0.30	45.24	VERDADERO
	12.50	1.36	0.00	0.010	1.58	FALSO	0.46	166.08	-30.63	-5.36	24.07	**24.07**	0.30	33.93	VERDADERO
	13.50	1.36	0.00	0.010	1.58	FALSO	0.46	166.15	-55.76	-9.75	24.07	**24.07**	0.30	33.93	VERDADERO
	14.50	1.36	0.00	0.010	1.58	FALSO	0.46	166.27	-58.91	-10.30	24.07	**24.07**	0.30	33.93	VERDADERO
	15.50	1.36	0.00	0.010	1.58	FALSO	0.46	166.32	-44.15	-7.72	24.07	**24.07**	0.30	33.93	VERDADERO
	16.50	1.36	0.00	0.010	1.58	FALSO	0.46	166.35	-29.31	-5.12	24.07	**24.07**	0.30	33.93	VERDADERO
	17.50	1.36	0.00	0.010	1.58	FALSO	0.46	166.28	-33.10	-5.79	24.07	**24.07**	0.30	33.93	VERDADERO
	18.50	1.36	0.00	0.010	1.58	FALSO	0.46	166.20	-17.61	-3.08	24.07	**24.07**	0.30	33.93	VERDADERO
	19.50	1.36	0.00	0.010	1.58	FALSO	0.46	166.11	-1.93	-0.34	24.07	**24.07**	0.30	33.93	VERDADERO
	20.50	1.36	0.00	0.010	1.58	FALSO	0.47	166.03	13.93	2.44	24.07	**24.07**	0.30	33.93	VERDADERO
	21.50	1.36	0.00	0.010	1.57	FALSO	0.47	165.85	11.78	2.06	24.07	**24.07**	0.30	33.93	VERDADERO
	22.50	1.36	0.00	0.010	1.57	FALSO	0.47	165.76	28.06	4.91	24.07	**24.07**	0.30	33.93	VERDADERO
	23.50	1.36	0.00	0.010	1.57	FALSO	0.47	165.67	44.50	7.78	24.07	**24.07**	0.30	45.24	VERDADERO
	24.50	1.36	0.00	0.010	1.57	FALSO	0.47	165.49	43.34	7.58	24.07	**24.07**	0.30	45.24	VERDADERO
	25.50	1.36	0.00	0.010	1.57	FALSO	0.47	165.39	60.19	10.52	24.07	**24.07**	0.30	45.24	VERDADERO
	26.50	1.36	0.00	0.010	1.56	FALSO	0.47	165.30	77.17	13.49	24.07	**24.07**	0.30	45.24	VERDADERO
	27.50	1.36	0.00	0.010	1.56	FALSO	0.47	165.11	77.01	13.47	24.07	**24.07**	0.30	45.24	VERDADERO
	28.50	1.36	0.00	0.010	1.56	FALSO	0.47	165.02	94.36	16.50	24.07	**24.07**	0.30	96.51	VERDADERO
	29.50	1.36	0.00	0.010	1.56	FALSO	0.47	164.94	184.25	32.21	24.07	**32.21**	0.30	96.51	VERDADERO
	30.50	1.36	0.00	0.010	1.56	FALSO	0.47	164.80	274.27	47.95	24.07	**47.95**	0.30	96.51	VERDADERO
	31.50	1.36	0.00	0.010	1.55	FALSO	0.48	164.52	423.88	74.11	24.07	**74.11**	0.30	96.51	VERDADERO
	32.50	1.36	0.00	0.010	1.55	FALSO	0.48	164.36	512.25	89.56	24.07	**89.56**	0.30	96.51	VERDADERO
	33.25	1.36	0.00	0.005	1.42	FALSO	0.54	302.32	456.35	79.79	52.03	**79.79**	0.30	96.51	VERDADERO
PILA 1	34.00	1.36	0.00	0.005	1.42	FALSO	0.54	302.32	489.94	85.66	52.03	**85.66**	0.30	96.51	VERDADERO

06/06/2017 ACL Diseño y Cálculo de Estructuras

CÁLCULO ARMADURA TRANSVERSAL EN VOLADIZO

	ABSCISA	VOLADIZO ESFUERZO RASANTE tn/m	SU1 tn/m	¿CUMPLE?	CM2/M RASANTE VOLADIZO NECESARIO	CM2/M FLEXIÓN VOLADIZO NECESARIO	CM2/M CARA SUPERIOR VOLADIZO DISPUESTO	CM2/M CARA INFERIOR VOLADIZO NECESARIO	CM2/M CARA INFERIOR VOLADIZO DISPUESTO	¿CUMPLE ARMADO DE VOLADIZO?
ESTRIBO 1	0.00	70.81	304.00	VERDADERO	17.27	10.61	11.31	5.96	11.31	VERDADERO
	1.00	63.77	304.00	VERDADERO	15.55	10.61	11.31	4.24	11.31	VERDADERO
	1.50	62.40	304.00	VERDADERO	15.22	10.61	11.31	3.91	11.31	VERDADERO
	2.50	58.04	304.00	VERDADERO	14.16	10.61	11.31	2.85	11.31	VERDADERO
	3.50	55.03	304.00	VERDADERO	13.42	10.61	11.31	2.11	11.31	VERDADERO
	4.50	50.76	304.00	VERDADERO	12.38	10.61	11.31	1.07	11.31	VERDADERO
	5.50	46.53	304.00	VERDADERO	11.35	10.61	11.31	0.04	11.31	VERDADERO
	6.50	42.34	304.00	VERDADERO	10.33	10.61	11.31	0.00	11.31	VERDADERO
	7.50	39.54	304.00	VERDADERO	9.64	10.61	11.31	0.00	11.31	VERDADERO
	8.50	35.44	304.00	VERDADERO	8.64	10.61	11.31	0.00	11.31	VERDADERO
	9.50	31.39	304.00	VERDADERO	7.66	10.61	11.31	0.00	11.31	VERDADERO
	10.50	28.75	304.00	VERDADERO	7.01	10.61	11.31	0.00	11.31	VERDADERO
	11.50	24.79	304.00	VERDADERO	6.05	10.61	11.31	0.00	5.65	VERDADERO
	12.50	20.88	304.00	VERDADERO	5.09	10.61	11.31	0.00	5.65	VERDADERO
	13.50	17.02	304.00	VERDADERO	4.15	10.61	11.31	0.00	5.65	VERDADERO
	14.50	16.55	304.00	VERDADERO	4.04	10.61	11.31	0.00	5.65	VERDADERO
	15.50	18.83	202.67	VERDADERO	4.59	10.61	11.31	0.00	5.65	VERDADERO
	16.50	21.13	202.67	VERDADERO	5.15	10.61	11.31	0.00	5.65	VERDADERO
	17.50	20.53	202.67	VERDADERO	5.01	10.61	11.31	0.00	5.65	VERDADERO
	18.50	22.91	202.67	VERDADERO	5.59	10.61	11.31	0.00	5.65	VERDADERO
	19.50	25.31	202.67	VERDADERO	6.17	10.61	11.31	0.00	5.65	VERDADERO
	20.50	27.74	202.67	VERDADERO	6.77	10.61	11.31	0.00	5.65	VERDADERO
	21.50	27.38	202.67	VERDADERO	6.68	10.61	11.31	0.00	5.65	VERDADERO
	22.50	29.88	202.67	VERDADERO	7.29	10.61	11.31	0.00	5.65	VERDADERO
	23.50	32.40	202.67	VERDADERO	7.90	10.61	11.31	0.00	5.65	VERDADERO
	24.50	32.19	202.67	VERDADERO	7.85	10.61	16.08	0.00	16.08	VERDADERO
	25.50	34.78	304.00	VERDADERO	8.48	10.61	16.08	0.00	16.08	VERDADERO
	26.50	37.38	304.00	VERDADERO	9.12	10.61	16.08	0.00	16.08	VERDADERO
	27.50	37.33	304.00	VERDADERO	9.10	10.61	16.08	0.00	16.08	VERDADERO
	28.50	39.99	304.00	VERDADERO	9.75	10.61	16.08	0.00	16.08	VERDADERO
	29.50	53.83	304.00	VERDADERO	13.13	10.61	16.08	0.00	16.08	VERDADERO
	30.50	67.69	304.00	VERDADERO	16.51	10.61	16.08	0.42	16.08	VERDADERO
	31.50	90.71	304.00	VERDADERO	22.12	10.61	16.08	6.04	16.08	VERDADERO
	32.50	104.31	304.00	VERDADERO	25.44	10.61	16.08	9.36	16.08	VERDADERO
	33.25	116.96	304.00	VERDADERO	28.53	10.61	16.08	12.44	16.08	VERDADERO
PILA 1	34.00	122.13	304.00	VERDADERO	29.79	10.61	16.08	13.70	16.08	VERDADERO

AUTOVÍA DE ALMANZORA. TRAMO: CUCADOR-ENLACE AL-7106 ESTRUCTURA E1 DIMENSIONAMIENTO ARMADURA PASIVA TABLERO

TORSORES DE SERVICIO

	ABSCISA	P.PROPIO	C.PERMA	SOBRECARGA TOTAL POSITIVO	SOBRECARGA TOTAL NEGATIVO	HIPERESTATICO PRETENSADO	ASIENTOS DIFERENCIALES POSITIVO	ASIENTOS DIFERENCIALES NEGATIVO	GRADIENTE TERMICO	VIENTO	TD (+)	TD (-)	TD MAX
ESTRIBO 1	0.00	0.00	0.00	295.77	-295.77	0.00	0.00	0.00	0.00	0.00	399.29	-399.29	399.29
	1.00	0.00	0.00	285.86	-285.86	0.00	0.00	0.00	0.00	0.00	385.91	-385.91	385.91
	1.50	0.00	0.00	285.86	-285.86	0.00	0.00	0.00	0.00	0.00	385.91	-385.91	385.91
	2.50	0.00	0.00	275.91	-275.91	0.00	0.00	0.00	0.00	0.00	372.48	-372.48	372.48
	3.50	0.00	0.00	266.12	-266.12	0.00	0.00	0.00	0.00	0.00	359.26	-359.26	359.26
	4.50	0.00	0.00	256.64	-256.64	0.00	0.00	0.00	0.00	0.00	346.47	-346.47	346.47
	5.50	0.00	0.00	247.40	-247.40	0.00	0.00	0.00	0.00	0.00	333.99	-333.99	333.99
	6.50	0.00	0.00	238.39	-238.39	0.00	0.00	0.00	0.00	0.00	321.83	-321.83	321.83
	7.50	0.00	0.00	229.61	-229.61	0.00	0.00	0.00	0.00	0.00	309.97	-309.97	309.97
	8.50	0.00	0.00	221.05	-221.05	0.00	0.00	0.00	0.00	0.00	298.42	-298.42	298.42
	9.50	0.00	0.00	212.72	-212.72	0.00	0.00	0.00	0.00	0.00	287.17	-287.17	287.17
	10.50	0.00	0.00	204.62	-204.62	0.00	0.00	0.00	0.00	0.00	276.23	-276.23	276.23
	11.50	0.00	0.00	196.74	-196.74	0.00	0.00	0.00	0.00	0.00	265.60	-265.60	265.60
	12.50	0.00	0.00	189.09	-189.09	0.00	0.00	0.00	0.00	0.00	255.28	-255.28	255.28
	13.50	0.00	0.00	181.67	-181.67	0.00	0.00	0.00	0.00	0.00	245.26	-245.26	245.26
	14.50	0.00	0.00	174.48	-174.48	0.00	0.00	0.00	0.00	0.00	235.55	-235.55	235.55
	15.50	0.00	0.00	167.51	-167.51	0.00	0.00	0.00	0.00	0.00	226.14	-226.14	226.14
	16.50	0.00	0.00	160.77	-160.77	0.00	0.00	0.00	0.00	0.00	217.04	-217.04	217.04
	17.50	0.00	0.00	154.26	-154.26	0.00	0.00	0.00	0.00	0.00	208.25	-208.25	208.25
	18.50	0.00	0.00	147.97	-147.97	0.00	0.00	0.00	0.00	0.00	199.76	-199.76	199.76
	19.50	0.00	0.00	141.91	-141.91	0.00	0.00	0.00	0.00	0.00	191.58	-191.58	191.58
	20.50	0.00	0.00	136.08	-136.08	0.00	0.00	0.00	0.00	0.00	183.71	-183.71	183.71
	21.50	0.00	0.00	137.29	-137.29	0.00	0.00	0.00	0.00	0.00	185.34	-185.34	185.34
	22.50	0.00	0.00	143.56	-143.56	0.00	0.00	0.00	0.00	0.00	193.80	-193.80	193.80
	23.50	0.00	0.00	150.05	-150.05	0.00	0.00	0.00	0.00	0.00	202.57	-202.57	202.57
	24.50	0.00	0.00	156.77	-156.77	0.00	0.00	0.00	0.00	0.00	211.65	-211.65	211.65
	25.50	0.00	0.00	163.72	-163.72	0.00	0.00	0.00	0.00	0.00	221.03	-221.03	221.03
	26.50	0.00	0.00	170.90	-170.90	0.00	0.00	0.00	0.00	0.00	230.72	-230.72	230.72
	27.50	0.00	0.00	178.30	-178.30	0.00	0.00	0.00	0.00	0.00	240.71	-240.71	240.71
	28.50	0.00	0.00	185.94	-185.94	0.00	0.00	0.00	0.00	0.00	251.01	-251.01	251.01
	29.50	0.00	0.00	193.79	-193.79	0.00	0.00	0.00	0.00	0.00	261.62	-261.62	261.62
	30.50	0.00	0.00	201.88	-201.88	0.00	0.00	0.00	0.00	0.00	272.54	-272.54	272.54
	31.50	0.00	0.00	217.31	-217.31	0.00	0.00	0.00	0.00	0.00	293.37	-293.37	293.37
	32.50	0.00	0.00	225.94	-225.94	0.00	0.00	0.00	0.00	0.00	305.02	-305.02	305.02
	33.25	0.00	0.00	227.72	-227.72	0.00	0.00	0.00	0.00	0.00	307.42	-307.42	307.42
PILA 1	34.00	0.00	0.00	236.74	-236.74	0.00	0.00	0.00	0.00	0.00	319.60	-319.60	319.60

06/06/2017 ACL Diseño y Cálculo de Estructuras

CÁLCULO ARMADURA DE TORSION

	ABSCISA	ALFA	Ae	u	he	TU1	TD/TD1	b	torsion combinada con cortante	¿CUMPLE?	SEPARACION MAXIMA ESTRIBOS	At (cm2/m) NECESARIA 1 rama perim.	At (cm2/m) DISPUESTA 1 rama perim.	Al (cm2/m) NECESARIA	Al (cm2/m) DISPUESTA MINIMA	CU,MPLE ARMADURA DE TORSIÓN?
ESTRIBO 1	0.00	0.60	5.94	11.94	0.30	1948.26	0.20	1.85	0.06	VERDADERO	0.30	8.20	11.31	8.20	16.08	VERDADERO
	1.00	0.60	5.94	11.94	0.30	1948.78	0.20	1.85	0.06	VERDADERO	0.30	7.92	11.31	7.92	16.08	VERDADERO
	1.50	0.60	5.94	11.94	0.30	2034.41	0.19	1.68	0.10	VERDADERO	0.30	7.92	11.31	7.92	16.08	VERDADERO
	2.50	0.60	5.94	11.94	0.30	2035.13	0.18	1.68	0.09	VERDADERO	0.30	7.65	11.31	7.65	16.08	VERDADERO
	3.50	0.60	5.94	11.94	0.30	2036.55	0.18	1.68	0.09	VERDADERO	0.30	7.38	11.31	7.38	16.08	VERDADERO
	4.50	0.60	5.94	11.94	0.30	2037.26	0.17	1.68	0.08	VERDADERO	0.30	7.11	11.31	7.11	16.08	VERDADERO
	5.50	0.60	5.94	11.94	0.30	2037.97	0.16	1.68	0.07	VERDADERO	0.30	6.86	11.31	6.86	16.08	VERDADERO
	6.50	0.60	5.94	11.94	0.30	2038.68	0.16	1.68	0.07	VERDADERO	0.30	6.61	11.31	6.61	16.08	VERDADERO
	7.50	0.60	5.94	11.94	0.30	2040.09	0.15	1.68	0.06	VERDADERO	0.30	6.36	11.31	6.36	16.08	VERDADERO
	8.50	0.60	5.94	11.94	0.30	2040.79	0.15	1.68	0.06	VERDADERO	0.30	6.13	11.31	6.13	16.08	VERDADERO
	9.50	0.60	5.94	11.94	0.30	2041.50	0.14	1.68	0.05	VERDADERO	0.30	5.90	11.31	5.90	16.08	VERDADERO
	10.50	0.60	5.94	11.94	0.30	2042.90	0.14	1.68	0.05	VERDADERO	0.30	5.67	11.31	5.67	16.08	VERDADERO
	11.50	0.60	5.94	11.94	0.30	2043.60	0.13	1.68	0.04	VERDADERO	0.30	5.45	5.65	5.45	16.08	VERDADERO
	12.50	0.60	5.94	11.94	0.30	2044.30	0.12	1.68	0.04	VERDADERO	0.30	5.24	5.65	5.24	16.08	VERDADERO
	13.50	0.60	5.94	11.94	0.30	2044.99	0.12	1.68	0.03	VERDADERO	0.30	5.04	5.65	5.04	16.08	VERDADERO
	14.50	0.60	5.94	11.94	0.30	2046.32	0.12	1.68	0.03	VERDADERO	0.30	4.84	5.65	4.84	16.08	VERDADERO
	15.50	0.60	5.94	11.94	0.30	2046.78	0.11	1.68	0.03	VERDADERO	0.30	4.64	5.65	4.64	16.08	VERDADERO
	16.50	0.60	5.94	11.94	0.30	2047.18	0.11	1.68	0.03	VERDADERO	0.30	4.46	5.65	4.46	16.08	VERDADERO
	17.50	0.60	5.94	11.94	0.30	2046.46	0.10	1.68	0.03	VERDADERO	0.30	4.28	5.65	4.28	16.08	VERDADERO
	18.50	0.60	5.94	11.94	0.30	2045.55	0.10	1.68	0.03	VERDADERO	0.30	4.10	5.65	4.10	16.08	VERDADERO
	19.50	0.60	5.94	11.94	0.30	2044.63	0.09	1.68	0.03	VERDADERO	0.30	3.93	5.65	3.93	16.08	VERDADERO
	20.50	0.60	5.94	11.94	0.30	2043.70	0.09	1.68	0.03	VERDADERO	0.30	3.77	5.65	3.77	16.08	VERDADERO
	21.50	0.60	5.94	11.94	0.30	2041.83	0.09	1.68	0.03	VERDADERO	0.30	3.81	5.65	3.81	16.08	VERDADERO
	22.50	0.60	5.94	11.94	0.30	2040.88	0.09	1.68	0.03	VERDADERO	0.30	3.98	5.65	3.98	16.08	VERDADERO
	23.50	0.60	5.94	11.94	0.30	2039.92	0.10	1.68	0.03	VERDADERO	0.30	4.16	5.65	4.16	16.08	VERDADERO
	24.50	0.60	5.94	11.94	0.30	2037.98	0.10	1.68	0.04	VERDADERO	0.30	4.35	5.65	4.35	16.08	VERDADERO
	25.50	0.60	5.94	11.94	0.30	2036.99	0.11	1.68	0.04	VERDADERO	0.30	4.54	16.08	4.54	16.08	VERDADERO
	26.50	0.60	5.94	11.94	0.30	2036.01	0.11	1.68	0.04	VERDADERO	0.30	4.74	16.08	4.74	16.08	VERDADERO
	27.50	0.60	5.94	11.94	0.30	2034.01	0.12	1.68	0.05	VERDADERO	0.30	4.94	16.08	4.94	16.08	VERDADERO
	28.50	0.60	5.94	11.94	0.30	2033.00	0.12	1.68	0.05	VERDADERO	0.30	5.15	16.08	5.15	16.08	VERDADERO
	29.50	0.60	5.94	11.94	0.30	2032.15	0.13	1.68	0.06	VERDADERO	0.30	5.37	16.08	5.37	16.08	VERDADERO
	30.50	0.60	5.94	11.94	0.30	2030.76	0.13	1.68	0.08	VERDADERO	0.30	5.60	16.08	5.60	16.08	VERDADERO
	31.50	0.60	5.94	11.94	0.30	2027.74	0.14	1.68	0.12	VERDADERO	0.30	6.02	16.08	6.02	16.08	VERDADERO
	32.50	0.60	5.94	11.94	0.30	2026.11	0.15	1.68	0.14	VERDADERO	0.30	6.26	16.08	6.26	16.08	VERDADERO
	33.25	0.60	5.94	11.94	0.30	1941.93	0.16	1.85	0.06	VERDADERO	0.30	6.31	16.08	6.31	16.08	VERDADERO
PILA 1	34.00	0.60	5.94	11.94	0.30	1941.93	0.16	1.85	0.06	VERDADERO	0.30	6.56	16.08	6.56	16.08	VERDADERO

CÁLCULO DEL DIAFRAGMA DE PILA

Nº DE APOYOS = 2

PROYECTO: AUTOVÍA ALMANZORA
ESTRUCTURA E-1
CÁLCULO DIAFRAGMA PILAS

LONGITUD TOTAL DE LA VIGA DIAFRAGMA	4.6	M
SEPARACIÓN ENTRE NEOPRENOS	2.5	M
VOLADIZOS VIRTUALES	1.05	M

	N	MT	T1	T2	R1	R2
ESTADO PERMANENTE	787	0	171	171	393.346	393.3
PERMA +SC MAXIMO TORSOR	1094	82	261	215	579.677	514.2
PERMA +SC MAXIMO AXIL	1094	82	261	215	579.677	514.2
PERMA +SC MINIMO AXIL	1094	82	261	215	579.677	514.2
PERMA+SC+GRAD+ASIENT MAXIMO TORSOR	1094	82	261	215	579.677	514.2
PERMA+SC+GRAD+ASIENT MAXIMO AXIL	1094	82	261	215	579.677	514.2
PERMA+SC+GRAD+ASIENT MINIMO AXIL	1094	82	261	215	579.677	514.2
			TN/M	TN/M	TN	TN

REACCIÓN MÁXIMA EN SERVICIO	580	TN
REACCIÓN MÍNIMA EN SERVICIO	393	TN
REACCIÓN MÁXIMA EN DISEÑO	783	TN
REACCIÓN MÍNIMA EN DISEÑO	575	TN
SUPERFICIE MINIMA DE NEOPRENO	3865	CM2
SUPERFICIE MAXIMA DE NEOPRENO	13112	CM2

ARMADURA DE ZUNCHADO SOBRE APOYOS

As = 20.45 cm2

ESFUERZOS EN RIOSTRA	T1	T2	T3	MS(-)	MS(+)
ESTADO PERMANENTE	171	171	171	94	39
PERMA +SC MAXIMO TORSOR	261	215	250	142	96
PERMA +SC MAXIMO AXIL	261	215	250	142	96
PERMA +SC MINIMO AXIL	261	215	250	142	96
PERMA+SC+GRAD+ASIENT MAXIMO TORSOR	261	215	250	142	96
PERMA+SC+GRAD+ASIENT MAXIMO AXIL	261	215	250	142	96
PERMA+SC+GRAD+ASIENT MINIMO AXIL	261	215	250	142	96
			MÁX	**-142**	**96**

M DISEÑO NEGATIVO	**-199**	t*m
M DISEÑO POSITIVO	**138**	t*m

CORTANTE DE DISEÑO EN VOLADIZO	411.1	TN
CORTANTE DE DISEÑO EN ZONA CENTRAL	457.7	TN
CORTANTE DE DISEÑO EN VOLADIZO (A 1 CANTO UTIL)	-170.3	TN
CORTANTE DE DISEÑO EN ZONA CENTRAL (A 1 CANTO UTIL)	-60.3	TN

ARMADURA NEGATIVA	31.6	CM2
ARMADURA POSITIVA	21.9	CM2
ANCHURA DE RIOSTRA	3	M
CANTO DE LA RIOSTRA	1.65	M

CÁLCULO A CORTANTE SEGÚN EHE

ESTRUCTURA E1
RIOSTRA DE PILA

DATOS:

Esfuerzo Cortante Efectivo		
Vrd	0	Tn.
Axil de comp. de la sección(incluye pret.)		
Nd	0	Tn.
Area total de la sección bruta		
Ac	4.95	m2
Resistencia característica hormigón		
fck	40	Nw/mm2
Coeficiente minoración hormigón		
gc	1.5	
Ancho neto mínimo del elemento		
bo	300	cm
Canto útil del elemento		
d	155	cm
Cotangente del angulo entre las bielas de compresión y el eje de la pieza		
cotgt	1	
Angulo de las armaduras con el eje de la pieza		
alfa	90	grados sex.
Armadura longitudinal pasiva traccionada		
As	147	cm2
Armadura longitudinal activa traccionada		
Ap	0	cm2
Límite elástico del acero pasivo		
fyk	5100	Kp/cm2
Límite elástico del acero activo		
fpk	15700	Kp/cm2

CÁLCULOS INTERMEDIOS:

Tensión axil efectiva			0.00	Tn/m2
Resistencia de cálculo del hormigón			26.67	Nw/mm2
Coeficiente K			1.00	
Vu1			3795.92	Tn.
chi			1.36	
cuantía armadura longitudinal			0.0032	
Vu2			180.30	Tn.
cotgte			1.00	
fctm			3.51	Nw/mm2
1	VERDADERO	FALSO		0
1	VERDADERO	VERDADERO		1.00
				1.00
beta			1.00	
Vcu			150.25	Tn.
Vsu			-150.25	Tn.
z			139.50	cm.
senoa			1.00	
cotga			0.00	
fyad			4081.00	Kp/cm2
Asa			-26.39	cm2/m
Amínima			40.01	cm2/m
VERDADERO			30.00	
FALSO	VERDADERO		0	
FALSO			0	
			30.00	
Separación máxima entre estribos			30.00	

RESULTADOS:

Cortante Vrd por debajo del cual no hay que poner estribos	180.30	Tn.
Caso contrario, Armadura de cortante a colocar	**40.01**	cm2/m
Separación máxima entre armaduras	30.00	cm.
Valor a cumplir de Vu1	3795.92	Tn.
Reaccion maxima de diseño en toda la pila:	**1476.9**	Tn
Porcentaje de dicha reaccion que se cuelga	50%	
Reaccion de diseño a colgar:	738.45	Tn
Armadura total de cuelgue:	180.11	cm2
Longitud del diafragma de pila:	4.6	m
Armadura a colocar por cuelgue:	39.15	cm2/m
Armadura de calculo por cortante general	85.66	cm2/m
Ancho de riostra	3	m
Armadura minima por cortante general	52.03	cm2/m
CUANTIA DE ARMADURA EN RIOSTRA DE PILA MEDIDA EN CM2/M EN LA PROPIA DIRECCION DE LA RIOSTRA	135.03	cm2/m
ARMADURA TOTAL EN LA RIOSTRA	621.12	CM2

CÁLCULO A CORTANTE SEGÚN EHE

ESTRUCTURA E1
RIOSTRA DE ESTRIBO

DATOS:

Esfuerzo Cortante Efectivo		
Vrd	0	Tn.
Axil de comp. de la sección(incluye pret.)		
Nd	0	Tn.
Area total de la sección bruta		
Ac	4.125	m2
Resistencia característica hormigón		
fck	40	Nw/mm2
Coeficiente minoración hormigón		
gc	1.5	
Ancho neto mínimo del elemento		
bo	250	cm
Canto útil del elemento		
d	155	cm
Cotangente del angulo entre las bielas de compresión y el eje de la pieza		
cotgt	1	
Angulo de las armaduras con el eje de la pieza		
alfa	90	grados sex.
Armadura longitudinal pasiva traccionada		
As	122.5	cm2
Armadura longitudinal activa traccionada		
Ap	0	cm2
Límite elástico del acero pasivo		
fyk	5100	Kp/cm2
Límite elástico del acero activo		
fpk	15700	Kp/cm2

CÁLCULOS INTERMEDIOS:

Tensión axil efectiva			0.00	Tn/m2
Resistencia de cálculo del hormigón			26.67	Nw/mm2
Coeficiente K			1.00	
Vu1			3163.27	Tn.
chi			1.36	
cuantía armadura longitudinal			0.0032	
Vu2			150.25	Tn.
cotgte			1.00	
fctm			3.51	Nw/mm2
1	VERDADERO	FALSO		0
1	VERDADERO	VERDADERO		1.00
				1.00
beta			1.00	
Vcu			125.21	Tn.
Vsu			-125.21	Tn.
z			139.50	cm.
senoa			1.00	
cotga			0.00	
fyad			4081.00	Kp/cm2
Asa			-21.99	cm2/m
Amínima			33.34	cm2/m
VERDADERO			30.00	
FALSO	VERDADERO		0	
FALSO			0	
			30.00	
Separación máxima entre estribos			30.00	

RESULTADOS:

Cortante Vrd por debajo del cual no hay que poner estribos	150.25	Tn.
Caso contrario, Armadura de cortante a colocar	**33.34**	cm2/m
Separación máxima entre armaduras	30.00	cm.
Valor a cumplir de Vu1	3163.27	Tn.
Reaccion maxima de diseño:	**621**	Tn
Porcentaje de dicha reaccion que se cuelga	50%	
Reaccion de diseño a colgar:	310.5	Tn
Armadura total de cuelgue:	75.73	cm2
Longitud del diafragma:	2.54	m
Armadura a colocar por cuelgue:	29.82	cm2/m
Armadura de calculo por cortante general	27.15	cm2/m
Ancho de riostra	2.5	m
Armadura minima por cortante general	52.03	cm2/m
CUANTIA DE ARMADURA EN RIOSTRA DE ESTRIBO MEDIDA EN CM2/M EN LA PROPIA DIRECCION DE LA RIOSTRA	89.88	cm2/m
ARMADURA TOTAL EN LA RIOSTRA	228.29	CM2

CÁLCULO DEL DIAFRAGMA DE ESTRIBO

Nº DE APOYOS = 2 (Del lado de la seguridad se analiza como símplemente apoyado entre dos apoyos contiguos. La armadura resultante se dispone en ambas caras)

PROYECTO: AUTOVÍA ALMANZORA
ESTRUCTURA E-1
CÁLCULO DIAFRAGMA ESTRIBOS

LONGITUD TOTAL DE LA VIGA DIAFRAGMA	2.54	M
SEPARACIÓN ENTRE NEOPRENOS	2.54	M
VOLADIZOS VIRTUALES	0	M

	N	MT	T1	T2	R1	R2
ESTADO PERMANENTE	263	0	104	104	131.702	131.7
PERMA +SC MAXIMO TORSOR	460	0	181	181	230.24	230.2
PERMA +SC MAXIMO AXIL	460	0	181	181	230.24	230.2
PERMA +SC MINIMO AXIL	460	0	181	181	230.24	230.2
PERMA+SC+GRAD+ASIENT MAXIMO TORSOR	460	0	181	181	230.24	230.2
PERMA+SC+GRAD+ASIENT MAXIMO AXIL	460	0	181	181	230.24	230.2
PERMA+SC+GRAD+ASIENT MINIMO AXIL	460	0	181	181	230.24	230.2
			TN/M	TN/M	TN	TN

REACCIÓN MÁXIMA EN SERVICIO	230	TN
REACCIÓN MÍNIMA EN SERVICIO	132	TN
REACCIÓN MÁXIMA EN DISEÑO	311	TN
REACCIÓN MÍNIMA EN DISEÑO	280	TN
SUPERFICIE MINIMA DE NEOPRENO	1535	CM2
SUPERFICIE MAXIMA DE NEOPRENO	4390	CM2

ARMADURA DE ZUNCHADO SOBRE APOYOS

As = 8.12 cm2

ESFUERZOS EN RIOSTRA	T1	T2	T3	MS(-)	MS(+)
ESTADO PERMANENTE	104	104	104	0	84
PERMA +SC MAXIMO TORSOR	181	181	181	0	146
PERMA +SC MAXIMO AXIL	181	181	181	0	146
PERMA +SC MINIMO AXIL	181	181	181	0	146
PERMA+SC+GRAD+ASIENT MAXIMO TORSOR	181	181	181	0	146
PERMA+SC+GRAD+ASIENT MAXIMO AXIL	181	181	181	0	146
PERMA+SC+GRAD+ASIENT MINIMO AXIL	181	181	181	0	146
			MÁX	**0**	**146**

M DISEÑO NEGATIVO	**0**	t*m
M DISEÑO POSITIVO	**207**	t*m

CORTANTE DE DISEÑO EN VOLADIZO	0.0	TN
CORTANTE DE DISEÑO EN ZONA CENTRAL	345.4	TN
CORTANTE DE DISEÑO EN VOLADIZO (A 1 CANTO UTIL)	-403.8	TN
CORTANTE DE DISEÑO EN ZONA CENTRAL (A 1 CANTO UTIL)	-33.4	TN

ARMADURA NEGATIVA	0.0	CM2
ARMADURA POSITIVA	32.9	CM2
ANCHURA DE RIOSTRA	2	M
CANTO DE LA RIOSTRA	1.65	M

ARMADURA DE ZUNCHADO DE PRETENSADO

ESTRUCTURA E1

NORMA BS5400

ANCLAJES DE 24 DE 0,50"

Semilado de la placa de anclaje a1	16.00	cm
Semidistancia menor a anclaje o borde mas proximo a	40.00	cm

Relacion entre semilados	0.40	
Ft/p	0.20	
Tension de tesado	152.00	kp/mm2
numero de cables en tendon	24.00	
Area de cada cable	100.00	mm2
P	364.80	tn
Tension de trabajo	2400.00	kp/cm2

Area a disponer (total por anclaje)		30.40	cm2		
Zona donde disponerla	desde	8	hasta	80	cm

CÁLCULO DE APARATOS DE APOYO Y JUNTA DE DILATACIÓN

c/ COLUMELA nº15, C.P. 11004 CÁDIZ. Tlf: 956222763 Fax: 956210106
e-mail: acl@acl-estructuras.com http://www.acl-estructuras.com

CÁLCULO DE NEOPRENOS FRENTE A LA SITUACIÓN PERSISTENTE
SEGÚN EN 1337-3
NEOPRENOS ESTRIBOS. ESTRUCTURA E1
DATOS GENERALES

D.Long (m)	0.7	m
D.Trans (m)	0.7	m
E.Goma (m)	0.14	m
Nº capas	9	

G	100	ton/m2

RIGIDEZ	3500 kN/ml

APOYO	HIPOTESIS	G (t/m2)	D.Long (m)	D.Trans (m)	E-Goma (m)	Nº Capas	S (forma)	Fl,d (ton)	Ft,d (ton)	Ns,d (ton)	Giro (rad)	S,m (Mpa)	Ar (m2)	K neop (t/m)	S,e (t/m2)	ec	eq	ealfa	et,d	etd,max	Cumple et,d?	Cumple eq?	Cumple estabilidad?	Cumple deslizamiento? (**)
1	ELU_01_Max	100	0.70	0.70	0.14	9.00	11.1	18.3	5.4	161.5	0.01	3.2	0.4	350.0	374.0	0.50	0.37	1.13	2.00	7.0	VERDADERO	VERDADERO	VERDADERO	VERDADERO
1	ELU_02_Max	100	0.70	0.70	0.14	9.00	11.1	18.7	5.4	117.6	0.01	2.4	0.4	350.0	272.7	0.37	0.38	1.13	1.87	7.0	VERDADERO	VERDADERO	VERDADERO	FALSO
2	ELU_01_Max	100	0.70	0.70	0.14	9.00	11.1	18.3	5.4	58.4	0.01	1.2	0.4	350.0	135.1	0.18	0.37	1.13	1.68	7.0	VERDADERO	VERDADERO	VERDADERO	FALSO
2	ELU_02_Max	100	0.70	0.70	0.14	9.00	11.1	18.7	5.4	41.7	0.01	0.8	0.4	350.0	96.6	0.13	0.38	1.13	1.64	7.0	VERDADERO	VERDADERO	VERDADERO	FALSO
3	ELU_01_Max	100	0.70	0.70	0.14	9.00	11.1	18.4	5.4	134.0	0.01	2.7	0.4	350.0	310.3	0.42	0.38	1.13	1.92	7.0	VERDADERO	VERDADERO	VERDADERO	FALSO
3	ELU_02_Max	100	0.70	0.70	0.14	9.00	11.1	18.8	5.4	90.0	0.01	1.8	0.4	350.0	208.9	0.28	0.38	1.13	1.79	7.0	VERDADERO	VERDADERO	VERDADERO	FALSO
4	ELU_01_Max	100	0.70	0.70	0.14	9.00	11.1	18.3	5.4	161.3	0.01	3.2	0.4	350.0	373.5	0.50	0.37	1.13	2.00	7.0	VERDADERO	VERDADERO	VERDADERO	VERDADERO
4	ELU_02_Max	100	0.70	0.70	0.14	9.00	11.1	18.7	5.4	117.4	0.01	2.4	0.4	350.0	272.3	0.37	0.38	1.13	1.87	7.0	VERDADERO	VERDADERO	VERDADERO	FALSO
5	ELU_01_Max	100	0.70	0.70	0.14	9.00	11.1	18.3	5.4	58.8	0.01	1.2	0.4	350.0	136.0	0.18	0.37	1.13	1.68	7.0	VERDADERO	VERDADERO	VERDADERO	FALSO
5	ELU_02_Max	100	0.70	0.70	0.14	9.00	11.1	18.7	5.4	42.0	0.01	0.8	0.4	350.0	97.3	0.13	0.38	1.13	1.64	7.0	VERDADERO	VERDADERO	VERDADERO	FALSO
6	ELU_01_Max	100	0.70	0.70	0.14	9.00	11.1	18.4	5.4	133.7	0.01	2.7	0.4	350.0	309.7	0.42	0.38	1.13	1.92	7.0	VERDADERO	VERDADERO	VERDADERO	FALSO
6	ELU_02_Max	100	0.70	0.70	0.14	9.00	11.1	18.8	5.4	89.9	0.01	1.8	0.4	350.0	208.4	0.28	0.38	1.13	1.79	7.0	VERDADERO	VERDADERO	VERDADERO	FALSO
1	ELU_01_Min	100	0.70	0.70	0.14	9.00	11.1	18.3	5.4	342.0	0.01	6.8	0.4	350.0	791.8	1.07	0.37	1.13	2.57	7.0	VERDADERO	VERDADERO	VERDADERO	VERDADERO
1	ELU_02_Min	100	0.70	0.70	0.14	9.00	11.1	18.7	5.4	298.1	0.01	6.0	0.4	350.0	691.2	0.93	0.38	1.13	2.44	7.0	VERDADERO	VERDADERO	VERDADERO	VERDADERO
2	ELU_01_Min	100	0.70	0.70	0.14	9.00	11.1	18.3	5.4	106.3	0.01	2.1	0.4	350.0	246.1	0.33	0.37	1.13	1.83	7.0	VERDADERO	VERDADERO	VERDADERO	FALSO
2	ELU_02_Min	100	0.70	0.70	0.14	9.00	11.1	18.7	5.4	89.6	0.01	1.8	0.4	350.0	207.9	0.28	0.38	1.13	1.79	7.0	VERDADERO	VERDADERO	VERDADERO	FALSO
3	ELU_01_Min	100	0.70	0.70	0.14	9.00	11.1	18.4	5.4	228.3	0.01	4.6	0.4	350.0	528.6	0.71	0.38	1.13	2.21	7.0	VERDADERO	VERDADERO	VERDADERO	VERDADERO
3	ELU_02_Min	100	0.70	0.70	0.14	9.00	11.1	18.8	5.4	184.3	0.01	3.7	0.4	350.0	427.6	0.58	0.38	1.13	2.08	7.0	VERDADERO	VERDADERO	VERDADERO	VERDADERO
4	ELU_01_Min	100	0.70	0.70	0.14	9.00	11.1	18.3	5.4	341.7	0.01	6.8	0.4	350.0	791.1	1.07	0.37	1.13	2.57	7.0	VERDADERO	VERDADERO	VERDADERO	VERDADERO
4	ELU_02_Min	100	0.70	0.70	0.14	9.00	11.1	18.7	5.4	297.8	0.01	6.0	0.4	350.0	690.6	0.93	0.38	1.13	2.44	7.0	VERDADERO	VERDADERO	VERDADERO	VERDADERO
5	ELU_01_Min	100	0.70	0.70	0.14	9.00	11.1	18.3	5.4	106.9	0.01	2.1	0.4	350.0	247.6	0.33	0.37	1.13	1.83	7.0	VERDADERO	VERDADERO	VERDADERO	FALSO
5	ELU_02_Min	100	0.70	0.70	0.14	9.00	11.1	18.7	5.4	90.2	0.01	1.8	0.4	350.0	209.1	0.28	0.38	1.13	1.79	7.0	VERDADERO	VERDADERO	VERDADERO	FALSO
6	ELU_01_Min	100	0.70	0.70	0.14	9.00	11.1	18.4	5.4	228.0	0.01	4.6	0.4	350.0	528.0	0.71	0.38	1.13	2.21	7.0	VERDADERO	VERDADERO	VERDADERO	VERDADERO
6	ELU_02_Min	100	0.70	0.70	0.14	9.00	11.1	18.8	5.4	184.1	0.01	3.7	0.4	350.0	427.1	0.58	0.38	1.13	2.08	7.0	VERDADERO	VERDADERO	VERDADERO	VERDADERO

(**) en caso de no cumplir, los neoprenos deberán ser anclados

CÁLCULO DE NEOPRENOS FRENTE A LA SITUACIÓN PERSISTENTE
SEGÚN EN 1337-3
NEOPRENOS PILAS. ESTRUCTURA E1
DATOS GENERALES

D.Long (m)	0.709	m
D.Trans (m)	0.709	m
E.Goma (m)	0.16	m
Nº capas	8	

G	100	ton/m2

RIGIDEZ	3141.593 kN/ml

APOYO	HIPOTESIS	G (t/m2)	D.Long (m)	D.Trans (m)	E-Goma (m)	Nº Capas	S (forma)	Fl,d (ton)	Ft,d (ton)	Ns,d (ton)	Giro (rad)	S,m (Mpa)	Ar (m2)	K neop (t/m)	S,e (t/m2)	ec	eq	ealfa	et,d	etd,max	Cumple et,d?	Cumple eq?	Cumple estabilidad?	Cumple deslizamiento? (**)
7	ELU_01_Max	100	0.71	0.71	0.16	8.00	8.8	8.5	3.7	488.7	0.01	9.5	0.5	314.2	1053.1	1.80	0.17	0.79	2.76	7.0	VERDADERO	VERDADERO	VERDADERO	VERDADERO
7	ELU_02_Max	100	0.71	0.71	0.16	8.00	8.8	8.5	3.7	330.0	0.01	6.4	0.5	314.2	711.1	1.22	0.17	0.79	2.17	7.0	VERDADERO	VERDADERO	VERDADERO	VERDADERO
8	ELU_01_Max	100	0.71	0.71	0.16	8.00	8.8	8.5	3.7	517.7	0.01	10.1	0.5	314.2	1115.7	1.91	0.17	0.79	2.86	7.0	VERDADERO	VERDADERO	VERDADERO	VERDADERO
8	ELU_02_Max	100	0.71	0.71	0.16	8.00	8.8	8.5	3.7	359.0	0.01	7.0	0.5	314.2	773.7	1.32	0.17	0.79	2.28	7.0	VERDADERO	VERDADERO	VERDADERO	VERDADERO
7	ELU_01_Min	100	0.71	0.71	0.16	8.00	8.8	8.5	3.8	648.7	0.01	12.7	0.5	314.2	1398.7	2.39	0.17	0.79	3.35	7.0	VERDADERO	VERDADERO	VERDADERO	VERDADERO
7	ELU_02_Min	100	0.71	0.71	0.16	8.00	8.8	8.5	3.8	490.0	0.01	9.6	0.5	314.2	1056.5	1.81	0.17	0.79	2.76	7.0	VERDADERO	VERDADERO	VERDADERO	VERDADERO
8	ELU_01_Min	100	0.71	0.71	0.16	8.00	8.8	8.5	3.8	863.3	0.01	16.8	0.5	314.2	1861.5	3.19	0.17	0.79	4.14	7.0	VERDADERO	VERDADERO	VERDADERO	VERDADERO
8	ELU_02_Min	100	0.71	0.71	0.16	8.00	8.8	8.5	3.8	704.6	0.01	13.8	0.5	314.2	1519.3	2.60	0.17	0.79	3.56	7.0	VERDADERO	VERDADERO	VERDADERO	VERDADERO

(**) en caso de no cumplir, los neoprenos deberán ser anclados

CÁLCULO DE NEOPRENOS FRENTE A LA SITUACIÓN SÍSMICA

ESTRUCTURA E1. ESTRIBOS

DATOS

Gb neoprenos considerada en el cálculo (g)		1000.00	[kPa]
Dimensión longitudinal (dl)		0.700	[m]
Dimensión transversal (dt)		0.700	[m]
Espesor de goma (eg)		0.140	[m]
Nº de capas (capas)		9.000	
Distancia entre borde de chapas y borde neopreno (db)		0.010	[m]
Coeficiente de mayoración de los desplazamientos yis (gis)		1.500	
Kl		1.000	
εu,d (eu_d)		7.000	

PARÁMETROS CALCULADOS

a	0.68	[m]
b	0.68	[m]
A1 (a_1)	0.46	[m2]
Ip (Ip)	2.72	
Factor de forma (S)	10.93	
Rigidez apoyo (K)	3500.00	[kN/ml]

(*) Desplazamientos del neopreno en sismo, afectados por el coeficiente de mayoración (yis). Acorde con (7.19) EN 1998-2:2005
(**) Acorde con EN 1337-3:2005. 5.3.3 (2)
(***) Acorde con (7.20) EN 1998-2:2005
(****) Acorde con EN 1337-3:2005. 5.3.3.6 (15 Y 16). En caso de no cumplirse, deberá anclarse el apoyo

APOYO/HIPOTESIS	ELEMENTO	Fl,d (kN)	Ft,d (kN)	Ns,d (kN)	Giro viga (rad)	vl,d (m) (*)	vt,d (m) (*)	Ar (m2)	εc,d	εs	ε,α	εt,d	Cumple εt,d? (**)	Cumple εs? (***)	σm Mpa	Cumple (****) deslizamiento?
1_ELU_SIS_X_Max	Estribos	327.052	81.006	1121.224	0.0050	0.14	0.03	0.34	0.45	1.03	0.53	2.01	VERDADERO	VERDADERO	2.29	FALSO
1_ELU_SIS_Y_Max	Estribos	146.609	269.545	960.406	0.0050	0.06	0.12	0.34	0.39	0.94	0.53	1.86	VERDADERO	VERDADERO	1.96	FALSO
2_ELU_SIS_X_Max	Estribos	326.125	80.847	434.886	0.0050	0.14	0.03	0.34	0.17	1.03	0.53	1.73	VERDADERO	VERDADERO	0.89	FALSO
2_ELU_SIS_Y_Max	Estribos	144.117	269.447	449.425	0.0050	0.06	0.12	0.34	0.18	0.94	0.53	1.65	VERDADERO	VERDADERO	0.92	FALSO
3_ELU_SIS_X_Max	Estribos	327.054	80.988	1101.175	0.0050	0.14	0.03	0.34	0.44	1.03	0.53	2.00	VERDADERO	VERDADERO	2.25	FALSO
3_ELU_SIS_Y_Max	Estribos	146.614	269.526	940.357	0.0050	0.06	0.12	0.34	0.38	0.94	0.53	1.85	VERDADERO	VERDADERO	1.92	FALSO
4_ELU_SIS_X_Max	Estribos	326.125	81.006	1119.692	0.0050	0.14	0.03	0.34	0.45	1.03	0.53	2.01	VERDADERO	VERDADERO	2.29	FALSO
4_ELU_SIS_Y_Max	Estribos	144.116	269.544	958.877	0.0050	0.06	0.12	0.34	0.38	0.94	0.53	1.85	VERDADERO	VERDADERO	1.96	FALSO
5_ELU_SIS_X_Max	Estribos	327.055	80.847	437.953	0.0050	0.14	0.03	0.34	0.17	1.03	0.53	1.74	VERDADERO	VERDADERO	0.89	FALSO
5_ELU_SIS_Y_Max	Estribos	146.616	269.446	452.516	0.0050	0.06	0.12	0.34	0.18	0.94	0.53	1.65	VERDADERO	VERDADERO	0.92	FALSO
6_ELU_SIS_X_Max	Estribos	197.131	80.987	1099.62	0.0050	0.08	0.03	0.38	0.40	0.65	0.53	1.58	VERDADERO	VERDADERO	2.24	FALSO
6_ELU_SIS_Y_Max	Estribos	16.691	269.525	938.804	0.0050	0.01	0.12	0.38	0.34	0.83	0.53	1.70	VERDADERO	VERDADERO	1.92	FALSO
1_ELU_SIS_X_Min	Estribos	327.052	81.006	1549.858	0.0050	0.14	0.03	0.34	0.62	1.03	0.53	2.18	VERDADERO	VERDADERO	3.16	VERDADERO
1_ELU_SIS_Y_Min	Estribos	146.609	269.545	1710.676	0.0050	0.06	0.12	0.34	0.69	0.94	0.53	2.16	VERDADERO	VERDADERO	3.49	VERDADERO
2_ELU_SIS_X_Min	Estribos	326.125	80.847	556.596	0.0050	0.14	0.03	0.34	0.22	1.03	0.53	1.78	VERDADERO	VERDADERO	1.14	FALSO
2_ELU_SIS_Y_Min	Estribos	144.117	269.447	542.058	0.0050	0.06	0.12	0.34	0.22	0.94	0.53	1.68	VERDADERO	VERDADERO	1.11	FALSO
3_ELU_SIS_X_Min	Estribos	327.054	80.988	1485.422	0.0050	0.14	0.03	0.34	0.59	1.03	0.53	2.16	VERDADERO	VERDADERO	3.03	VERDADERO
3_ELU_SIS_Y_Min	Estribos	146.614	269.526	1646.24	0.0050	0.06	0.12	0.34	0.66	0.94	0.53	2.13	VERDADERO	VERDADERO	3.36	VERDADERO
4_ELU_SIS_X_Min	Estribos	326.125	81.006	1548.095	0.0050	0.14	0.03	0.34	0.62	1.03	0.53	2.18	VERDADERO	VERDADERO	3.16	VERDADERO
4_ELU_SIS_Y_Min	Estribos	144.116	269.544	1708.911	0.0050	0.06	0.12	0.34	0.69	0.94	0.53	2.15	VERDADERO	VERDADERO	3.49	VERDADERO
5_ELU_SIS_X_Min	Estribos	327.055	80.847	560.115	0.0050	0.14	0.03	0.34	0.22	1.03	0.53	1.79	VERDADERO	VERDADERO	1.14	FALSO
5_ELU_SIS_Y_Min	Estribos	146.616	269.446	545.552	0.0050	0.06	0.12	0.34	0.22	0.94	0.53	1.69	VERDADERO	VERDADERO	1.11	FALSO
6_ELU_SIS_X_Min	Estribos	197.131	80.987	1483.682	0.0050	0.08	0.03	0.38	0.53	0.65	0.53	1.72	VERDADERO	VERDADERO	3.03	VERDADERO
6_ELU_SIS_Y_Min	Estribos	16.691	269.525	1644.498	0.0050	0.01	0.12	0.38	0.60	0.83	0.53	1.95	VERDADERO	VERDADERO	3.36	VERDADERO

CÁLCULO DE NEOPRENOS FRENTE A LA SITUACIÓN SÍSMICA

ESTRUCTURA E1. PILAS

DATOS

Gb neoprenos considerada en el cálculo (g)		1000.00	[kPa]
Dimensión longitudinal (dl)		0.709	[m]
Dimensión transversal (dt)		0.709	[m]
Espesor de goma (eg)		0.160	[m]
Nº de capas (capas)		8.000	
Distancia entre borde de chapas y borde neopreno (db)		0.010	[m]
Coeficiente de mayoración de los desplazamientos yis (gis)		1.500	
Kl		1.000	
εu,d (eu_d)		7.000	

PARÁMETROS CALCULADOS

a	0.69	[m]
b	0.69	[m]
A1 (a_1)	0.47	[m2]
Ip (Ip)	2.76	
Factor de forma (S)	8.61	
Rigidez apoyo (K)	3141.59	[kN/ml]

(*) Desplazamientos del neopreno en sismo, afectados por el coeficiente de mayoración (yis). Acorde con (7.19) EN 1998-2:2005
(**) Acorde con EN 1337-3:2005. 5.3.3 (2)
(***) Acorde con (7.20) EN 1998-2:2005
(****) Acorde con EN 1337-3:2005. 5.3.3.6 (15 Y 16). En caso de no cumplirse, deberá anclarse el apoyo

APOYO/HIPOTESIS	ELEMENTO	Fl,d (kN)	Ft,d (kN)	Ns,d (kN)	Giro viga (rad)	vl,d (m) (*)	vt,d (m) (*)	Ar (m2)	εc,d	εs	ε,α	εt,d	Cumple εt,d? (**)	Cumple εs? (***)	σm Mpa	Cumple (****) deslizamiento?
7_ELU_SIS_X_Max	Pilas	206.637	60.085	3484.194	0.0010	0.10	0.03	0.39	1.57	0.64	0.22	2.43	VERDADERO	VERDADERO	6.93	VERDADERO
7_ELU_SIS_Y_Max	Pilas	62.303	200.133	3253.638	0.0010	0.03	0.10	0.39	1.46	0.63	0.22	2.31	VERDADERO	VERDADERO	6.47	VERDADERO
8_ELU_SIS_X_Max	Pilas	206.635	60.085	3494.936	0.0010	0.10	0.03	0.39	1.57	0.64	0.22	2.44	VERDADERO	VERDADERO	6.95	VERDADERO
8_ELU_SIS_Y_Max	Pilas	62.303	200.133	3264.38	0.0010	0.03	0.10	0.39	1.46	0.63	0.22	2.31	VERDADERO	VERDADERO	6.49	VERDADERO
7_ELU_SIS_X_Min	Pilas	206.637	60.041	4304.268	0.0010	0.10	0.03	0.39	1.94	0.64	0.22	2.80	VERDADERO	VERDADERO	8.56	VERDADERO
7_ELU_SIS_Y_Min	Pilas	62.303	200.089	4534.824	0.0010	0.03	0.10	0.39	2.03	0.63	0.22	2.88	VERDADERO	VERDADERO	9.02	VERDADERO
8_ELU_SIS_X_Min	Pilas	206.635	60.041	4487.022	0.0010	0.10	0.03	0.39	2.02	0.64	0.22	2.88	VERDADERO	VERDADERO	8.93	VERDADERO
8_ELU_SIS_Y_Min	Pilas	62.303	200.089	4717.578	0.0010	0.03	0.10	0.39	2.12	0.63	0.22	2.96	VERDADERO	VERDADERO	9.39	VERDADERO

CÁLCULO DE NEOPRENOS FRENTE A LA SITUACIÓN SÍSMICA

ESTRUCTURA E1. ESTRIBOS

DATOS

Gb neoprenos considerada en el cálculo (g)		1500.00	[kPa]
Dimensión longitudinal (dl)		0.700	[m]
Dimensión transversal (dt)		0.700	[m]
Espesor de goma (eg)		0.140	[m]
Nº de capas (capas)		9.000	
Distancia entre borde de chapas y borde neopreno (db)		0.010	[m]
Coeficiente de mayoración de los desplazamientos γis (gis)		1.500	
Kl		1.000	
εu,d (eu_d)		7.000	

PARÁMETROS CALCULADOS

a	0.68	[m]
b	0.68	[m]
A1 (a_1)	0.46	[m2]
Ip (Ip)	2.72	
Factor de forma (S)	10.93	
Rigidez apoyo (K)	5250.00	[kN/ml]

(*) Desplazamientos del neopreno en sismo, afectados por el coeficiente de mayoración (γis). Acorde con (7.19) EN 1998-2:2005
(**) Acorde con EN 1337-3:2005. 5.3.3 (2)
(***) Acorde con (7.20) EN 1998-2:2005
(****) Acorde con EN 1337-3:2005. 5.3.3.6 (15 Y 16). En caso de no cumplirse, deberá anclarse el apoyo

APOYO/HIPOTESIS	ELEMENTO	Fl,d (kN)	Ft,d (kN)	Ns,d (kN)	Giro viga (rad)	vl,d (m) (*)	vt,d (m) (*)	Ar (m2)	εc,d	εs	ε,α	εt,d	Cumple εt,d? (**)	Cumple εs? (***)	σm Mpa	Cumple (****) deslizamiento?
1_ELU_SIS_X_Max	Estribos	402.052	98.837	1102.67	0.0050	0.11	0.03	0.37	0.28	0.84	0.53	1.65	VERDADERO	VERDADERO	2.25	FALSO
1_ELU_SIS_Y_Max	Estribos	187.999	328.728	907.521	0.0050	0.05	0.09	0.36	0.23	0.77	0.53	1.53	VERDADERO	VERDADERO	1.85	FALSO
2_ELU_SIS_X_Max	Estribos	400.377	98.597	429.582	0.0050	0.11	0.03	0.37	0.11	0.84	0.53	1.48	VERDADERO	VERDADERO	0.88	FALSO
2_ELU_SIS_Y_Max	Estribos	183.528	328.602	446.635	0.0050	0.05	0.09	0.36	0.11	0.77	0.53	1.41	VERDADERO	VERDADERO	0.91	FALSO
3_ELU_SIS_X_Max	Estribos	402.055	98.812	1082.62	0.0050	0.11	0.03	0.37	0.27	0.84	0.53	1.65	VERDADERO	VERDADERO	2.21	FALSO
3_ELU_SIS_Y_Max	Estribos	188.005	328.703	887.471	0.0050	0.05	0.09	0.36	0.22	0.77	0.53	1.53	VERDADERO	VERDADERO	1.81	FALSO
4_ELU_SIS_X_Max	Estribos	400.377	98.836	1101.144	0.0050	0.11	0.03	0.37	0.28	0.84	0.53	1.65	VERDADERO	VERDADERO	2.25	FALSO
4_ELU_SIS_Y_Max	Estribos	183.528	328.727	906	0.0050	0.05	0.09	0.36	0.23	0.77	0.53	1.53	VERDADERO	VERDADERO	1.85	FALSO
5_ELU_SIS_X_Max	Estribos	402.057	98.597	432.64	0.0050	0.11	0.03	0.37	0.11	0.84	0.53	1.48	VERDADERO	VERDADERO	0.88	FALSO
5_ELU_SIS_Y_Max	Estribos	188.008	328.601	449.722	0.0050	0.05	0.09	0.36	0.11	0.77	0.53	1.42	VERDADERO	VERDADERO	0.92	FALSO
6_ELU_SIS_X_Max	Estribos	223.614	98.811	1081.07	0.0050	0.06	0.03	0.40	0.25	0.50	0.53	1.28	VERDADERO	VERDADERO	2.21	FALSO
6_ELU_SIS_Y_Max	Estribos	9.565	328.702	885.925	0.0050	0.00	0.09	0.40	0.20	0.67	0.53	1.41	VERDADERO	VERDADERO	1.81	FALSO
1_ELU_SIS_X_Min	Estribos	402.052	98.837	1566.878	0.0050	0.11	0.03	0.37	0.39	0.84	0.53	1.77	VERDADERO	VERDADERO	3.20	VERDADERO
1_ELU_SIS_Y_Min	Estribos	187.999	328.728	1762.027	0.0050	0.05	0.09	0.36	0.45	0.77	0.53	1.75	VERDADERO	VERDADERO	3.60	VERDADERO
2_ELU_SIS_X_Min	Estribos	400.377	98.597	558.492	0.0050	0.11	0.03	0.37	0.14	0.84	0.53	1.51	VERDADERO	VERDADERO	1.14	FALSO
2_ELU_SIS_Y_Min	Estribos	183.528	328.602	541.439	0.0050	0.05	0.09	0.36	0.14	0.77	0.53	1.44	VERDADERO	VERDADERO	1.10	FALSO
3_ELU_SIS_X_Min	Estribos	402.055	98.812	1502.44	0.0050	0.11	0.03	0.37	0.38	0.84	0.53	1.75	VERDADERO	VERDADERO	3.07	VERDADERO
3_ELU_SIS_Y_Min	Estribos	188.005	328.703	1697.589	0.0050	0.05	0.09	0.36	0.43	0.77	0.53	1.73	VERDADERO	VERDADERO	3.46	VERDADERO
4_ELU_SIS_X_Min	Estribos	400.377	98.836	1565.112	0.0050	0.11	0.03	0.37	0.39	0.84	0.53	1.76	VERDADERO	VERDADERO	3.19	VERDADERO
4_ELU_SIS_Y_Min	Estribos	183.528	328.727	1760.257	0.0050	0.05	0.09	0.36	0.44	0.77	0.53	1.74	VERDADERO	VERDADERO	3.59	VERDADERO
5_ELU_SIS_X_Min	Estribos	402.057	98.597	562.013	0.0050	0.11	0.03	0.37	0.14	0.84	0.53	1.52	VERDADERO	VERDADERO	1.15	FALSO
5_ELU_SIS_Y_Min	Estribos	188.008	328.601	544.932	0.0050	0.05	0.09	0.36	0.14	0.77	0.53	1.44	VERDADERO	VERDADERO	1.11	FALSO
6_ELU_SIS_X_Min	Estribos	223.614	98.811	1500.697	0.0050	0.06	0.03	0.40	0.34	0.50	0.53	1.37	VERDADERO	VERDADERO	3.06	VERDADERO
6_ELU_SIS_Y_Min	Estribos	9.565	328.702	1695.842	0.0050	0.00	0.09	0.40	0.39	0.67	0.53	1.59	VERDADERO	VERDADERO	3.46	VERDADERO

CÁLCULO DE NEOPRENOS FRENTE A LA SITUACIÓN SÍSMICA

ESTRUCTURA E1. PILAS

DATOS

Gb neoprenos considerada en el cálculo (g)		1500.00	[kPa]
Dimensión longitudinal (dl)		0.709	[m]
Dimensión transversal (dt)		0.709	[m]
Espesor de goma (eg)		0.160	[m]
Nº de capas (capas)		8.000	
Distancia entre borde de chapas y borde neopreno (db)		0.010	[m]
Coeficiente de mayoración de los desplazamientos γis (gis)		1.500	
Kl		1.000	
εu,d (eu_d)		7.000	

PARÁMETROS CALCULADOS

a	0.69	[m]
b	0.69	[m]
A1 (a_1)	0.47	[m2]
Ip (Ip)	2.76	
Factor de forma (S)	8.61	
Rigidez apoyo (K)	4712.39	[kN/ml]

(*) Desplazamientos del neopreno en sismo, afectados por el coeficiente de mayoración (γis). Acorde con (7.19) EN 1998-2:2005
(**) Acorde con EN 1337-3:2005. 5.3.3 (2)
(***) Acorde con (7.20) EN 1998-2:2005
(****) Acorde con EN 1337-3:2005. 5.3.3.6 (15 Y 16). En caso de no cumplirse, deberá anclarse el apoyo

APOYO/HIPOTESIS	ELEMENTO	Fl,d (kN)	Ft,d (kN)	Ns,d (kN)	Giro viga (rad)	vl,d (m) (*)	vt,d (m) (*)	Ar (m2)	εc,d	εs	ε,α	εt,d	Cumple εt,d? (**)	Cumple εs? (***)	σm Mpa	Cumple (****) deslizamiento?
7_ELU_SIS_X_Max	Pilas	236.574	68.544	3468.158	0.0010	0.08	0.02	0.41	0.99	0.49	0.22	1.70	VERDADERO	VERDADERO	6.90	VERDADERO
7_ELU_SIS_Y_Max	Pilas	71.386	228.28	3192.588	0.0010	0.02	0.07	0.41	0.91	0.48	0.22	1.60	VERDADERO	VERDADERO	6.35	VERDADERO
8_ELU_SIS_X_Max	Pilas	236.572	68.544	3478.905	0.0010	0.08	0.02	0.41	0.99	0.49	0.22	1.70	VERDADERO	VERDADERO	6.92	VERDADERO
8_ELU_SIS_Y_Max	Pilas	71.386	228.28	3203.335	0.0010	0.02	0.07	0.41	0.91	0.48	0.22	1.61	VERDADERO	VERDADERO	6.37	VERDADERO
7_ELU_SIS_X_Min	Pilas	236.574	68.486	4326.792	0.0010	0.08	0.02	0.41	1.23	0.49	0.22	1.94	VERDADERO	VERDADERO	8.61	VERDADERO
7_ELU_SIS_Y_Min	Pilas	71.386	228.222	4602.362	0.0010	0.02	0.07	0.41	1.31	0.48	0.22	2.00	VERDADERO	VERDADERO	9.16	VERDADERO
8_ELU_SIS_X_Min	Pilas	236.572	68.486	4509.528	0.0010	0.08	0.02	0.41	1.28	0.49	0.22	2.00	VERDADERO	VERDADERO	8.97	VERDADERO
8_ELU_SIS_Y_Min	Pilas	71.386	228.222	4785.098	0.0010	0.02	0.07	0.41	1.36	0.48	0.22	2.06	VERDADERO	VERDADERO	9.52	VERDADERO

DIMENSIONAMIENTO DE LA JUNTA DE DILATACIÓN EN ESTRIBOS

G neopreno	100	ton/m2

Acción	Apertura (mm)	Cierre (mm)
Retracción y fluencia	24.4	0.0
Térmico	5.4	12.0
Frenado	23.1	23.1
Sismo Frecuente Long	33.2	33.2

	Apertura (mm)	Cierre (mm)
Carácterística 1	43.58	25.84
Carácterística 2	50.65	30.26
Sismo frecuente	57.57	33.19

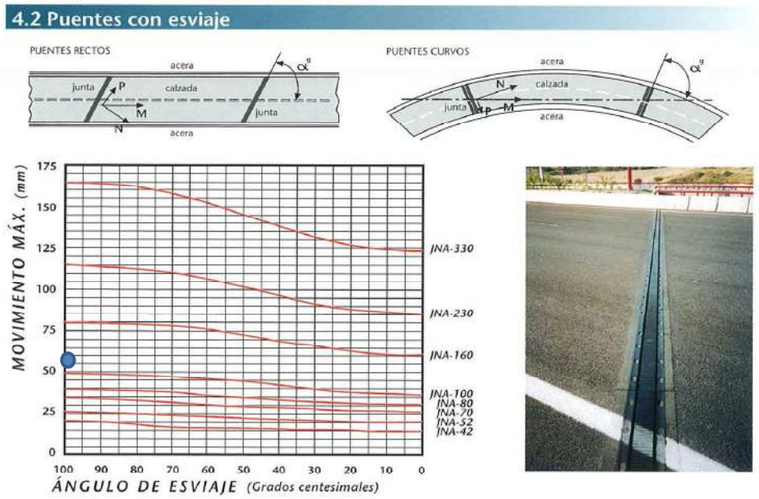

Esviaje de la junta	100.0	g
Valor de M	58	mm

Junta a disponer	**JNA-160**	o similar

CÁLCULO DE PILAS Y CIMIENTOS

c/ COLUMELA nº15, C.P. 11004 CÁDIZ. Tlf: 956222763 Fax: 956210106
e-mail: acl@acl-estructuras.com http://www.acl-estructuras.com

SAP2000 6/7/17 8:24:07

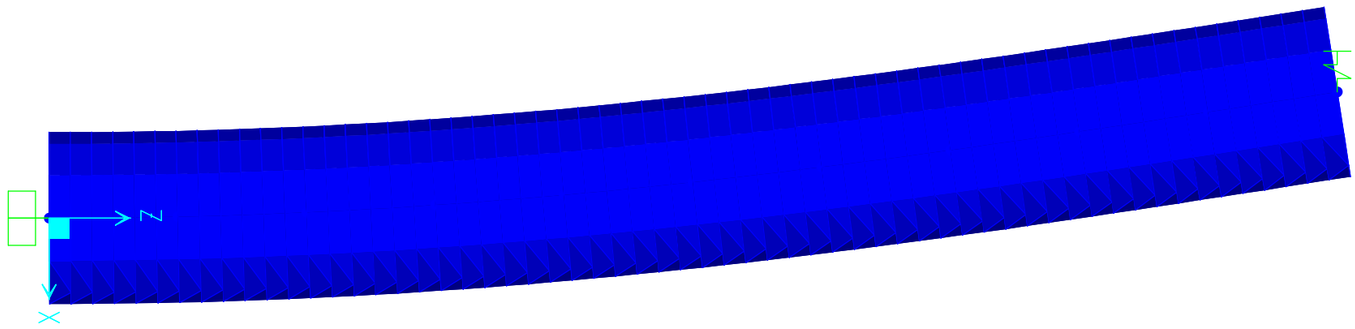

SAP2000 v15.1.0 - File:PILA_PANDEO - Deformed Shape (PANDEO) - Mode 1 - Factor 800.73955 - KN, m, C Units

ESTRUCTURA E1. ESFUERZOS DE DISEÑO EN FUSTES DE PILA. EN 1ER Y 2ND ORDEN

CANTO TOTAL SECCIÓN (h)	1	m
ALTURA DE FUSTE DE PILA	7.5	m
EXCENTRICIDAD ACCIDENTAL	0.05	m
AXIL DE PANDEO ASOCIADO AL PRIMER MODO	80073.96	kN
MÓDULO DE DEFORMACIÓN HORMIGÓN	28576791	kN/m2
INERCIA SECCIÓN	0.049	m4
RADIO DE GIRO (ic)	0.25	m

LONGITUD DE PANDEO (lo)	13.149	m
COEFICIENTE DE PANDEO	1.753	
ESBELTEZ MECÁNICA	52.596	

Frame	Station	OutputCase	CaseType	StepType	P	V2	V3	M2	M3	VR	MR			MR
Text	m	Text	Text	Text	KN	KN	KN	KN-m	KN-m	kN	1ER	Ee (m)	Ea (m)	2ND (*)
3.00	0.00	ELU_01	Combination	Max	-5280.81	83.04	-49.54	-323.53	647.67	96.69	988.02	0.19	0.16	**1810.82**
3.00	0.00	ELU_01	Combination	Min	-8670.96	-83.04	-50.90	-334.14	-647.67	97.39	1162.33	0.13	0.15	**2448.77**
3.00	0.00	ELU_02	Combination	Max	-3672.48	83.04	-49.54	-323.53	647.67	96.69	907.61	0.25	0.16	**1500.68**
3.00	0.00	ELU_02	Combination	Min	-7062.64	-83.04	-50.90	-334.14	-647.67	97.39	1081.91	0.15	0.15	**2151.26**
3.00	0.00	ELU_SIS_X	Combination	Max	-3625.35	244.14	70.95	541.58	1866.38	254.24	2124.64	0.59	0.17	**2758.77**
3.00	0.00	ELU_SIS_X	Combination	Min	-4657.61	-244.14	-70.89	-541.12	-1866.38	254.22	2176.12	0.47	0.17	**2977.40**
3.00	0.00	ELU_SIS_Y	Combination	Max	-3349.73	73.66	236.29	1803.69	563.15	247.50	2057.05	0.61	0.18	**2644.78**
3.00	0.00	ELU_SIS_Y	Combination	Min	-4933.23	-73.66	-236.23	-1803.24	-563.15	247.45	2135.79	0.43	0.17	**2979.21**
3.00	0.00	ELU_SIS_Z	Combination	Max	-3025.20	73.66	70.95	541.58	563.15	102.27	932.57	0.31	0.17	**1433.43**
3.00	0.00	ELU_SIS_Z	Combination	Min	-5257.76	-73.66	-70.89	-541.12	-563.15	102.23	1043.88	0.20	0.16	**1869.71**
4.00	0.00	ELU_01	Combination	Max	-4997.96	83.03	-49.54	-323.53	647.60	96.68	973.81	0.19	0.16	**1756.86**
4.00	0.00	ELU_01	Combination	Min	-6567.49	-83.03	-50.90	-334.14	-647.60	97.39	1057.09	0.16	0.15	**2058.75**
4.00	0.00	ELU_02	Combination	Max	-3389.63	83.03	-49.54	-323.53	647.60	96.68	893.40	0.26	0.16	**1444.96**
4.00	0.00	ELU_02	Combination	Min	-4959.16	-83.03	-50.90	-334.14	-647.60	97.39	976.68	0.20	0.16	**1754.76**
4.00	0.00	ELU_SIS_X	Combination	Max	-3614.60	244.17	70.95	541.58	1866.42	254.27	2124.14	0.59	0.17	**2756.51**
4.00	0.00	ELU_SIS_X	Combination	Min	-4474.87	-244.17	-70.89	-541.12	-1866.42	254.25	2167.03	0.48	0.17	**2939.04**
4.00	0.00	ELU_SIS_Y	Combination	Max	-3338.98	73.67	236.29	1803.69	563.16	247.50	2056.51	0.62	0.18	**2642.47**
4.00	0.00	ELU_SIS_Y	Combination	Min	-4750.50	-73.67	-236.23	-1803.24	-563.16	247.45	2126.65	0.45	0.17	**2941.09**
4.00	0.00	ELU_SIS_Z	Combination	Max	-3014.45	73.67	70.95	541.58	563.16	102.28	932.04	0.31	0.17	**1431.27**
4.00	0.00	ELU_SIS_Z	Combination	Min	-5075.02	-73.67	-70.89	-541.12	-563.16	102.23	1034.75	0.20	0.16	**1834.70**

(*) Aplicando la expresión 43.5.1 de la EHE-08

FUSTE_PILA

1.- Norma

Instrucción de Hormigón Estructural (EHE-08)

2.- Detalle

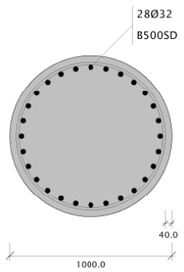

Hormigón: 7853.98 cm²
Armaduras: 22518.94 mm²
Cuantía: 28.67 ‰

Hormigón: HA-30

3.- Materiales

3.1.- Hormigón

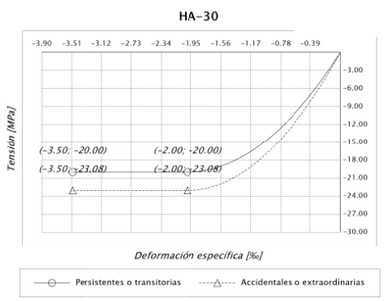

Designación: HA-30
f_{ck}: 30.00 MPa
α_{cc}: 1.000 (Persistentes o transitorias)
α_{cc}: 1.000 (Accidentales o extraordinarias)
γ_c: 1.500 (Persistentes o transitorias)
γ_c: 1.300 (Accidentales o extraordinarias)
f_{cd}: 20.00 MPa (Persistentes o transitorias)
f_{cd}: 23.08 MPa (Accidentales o extraordinarias)
ϵ_{c0}: 2.00 ‰
ϵ_{cu}: 3.50 ‰
n: 2.000 (exponente)

3.2.- Armadura

Empresa:	ACL ESTRUCTURAS	Proyecto:	AUTOVIA ALMANZORA. TRAMO: CUCADOR-ENLACE AL-7106
Dirección:		Código:	ESTRUCTURA E1
Teléfono/Fax:		Autor:	
Sitio web:		Fecha:	07/06/2017

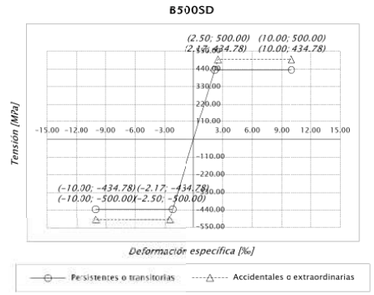

Designación: B500SD
f_{yk}: 500.00 MPa
γ_s: 1.150 (Persistentes o transitorias)
γ_s: 1.000 (Accidentales o extraordinarias)
f_{yd}: 434.78 MPa (Persistentes o transitorias)
f_{yd}: 500.00 MPa (Accidentales o extraordinarias)
$\epsilon_{máx}$: 10.00 ‰
E_s: 200000.0 MPa

4.- Esfuerzos internos aplicados

Combinación	N_d [kN]	Myy_d [kN·m]	Mzz_d [kN·m]	Accidental
3_ELU_01_Max	-5280.81	1810.82	0.00	No
3_ELU_01_Min	-8670.96	2448.77	0.00	No
3_ELU_02_Max	-3672.48	1500.68	0.00	No
3_ELU_02_Min	-7062.64	2151.26	0.00	No
3_ELU_SIS_X_Max	-3625.35	2758.77	0.00	Si
3_ELU_SIS_X_Min	-4657.61	2977.40	0.00	Si
3_ELU_SIS_Y_Max	-3349.73	2644.78	0.00	Si
3_ELU_SIS_Y_Min	-4933.23	2979.21	0.00	Si
3_ELU_SIS_Z_Max	-3025.20	1433.43	0.00	Si
3_ELU_SIS_Z_Min	-5257.76	1869.71	0.00	Si
4_ELU_01_Max	-4997.96	1756.86	0.00	No
4_ELU_01_Min	-6567.49	2058.75	0.00	No
4_ELU_02_Max	-3389.63	1444.96	0.00	No
4_ELU_02_Min	-4959.16	1754.76	0.00	No
4_ELU_SIS_X_Max	-3614.60	2756.51	0.00	Si
4_ELU_SIS_X_Min	-4474.87	2939.04	0.00	Si
4_ELU_SIS_Y_Max	-3338.98	2642.47	0.00	Si
4_ELU_SIS_Y_Min	-4750.50	2941.09	0.00	Si
4_ELU_SIS_Z_Max	-3014.45	1431.27	0.00	Si
4_ELU_SIS_Z_Min	-5075.02	1834.70	0.00	Si

5.- Comprobaciones

La sección transversal resiste todas las combinaciones.

Combinación: 3_ELU_SIS_X_Min

5.1.- Comprobación de resistencia a los esfuerzos actuantes

5.1.1) Hormigón

Máxima deformación de compresión: -1.87 ‰
Máxima tensión de compresión: -22.97 MPa

5.1.2) Armadura

Máxima deformación de compresión: -1.59 ‰
Máxima tensión de compresión: -317.90 MPa
Máxima deformación de tracción: 1.71 ‰
Máxima tensión de tracción: 341.17 MPa

5.1.3) Equilibrio

Valor y posición de las resultantes internas

Resultante	Valor *[kN]*	Y *[m]*	Z *[m]*	Vista 3D
Hormigón	-4919.67	0.000	-0.282	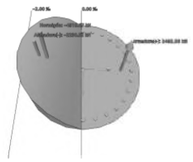
Armadura comprimida	-2230.52	0.000	-0.340	
Armadura traccionada	2492.58	0.000	0.333	

5.2.- Comprobación de resistencia para la situación de colapso

Modo de colapsar: Axil y excentricidades Y-Z constantes
N_u: -4657.61 kN
Myy_u: 4348.24 kN · m
Mzz_u: 0.00 kN · m
Aprovechamiento: 68.47 %

5.2.1) Hormigón

Máxima deformación de compresión: -3.50 ‰
Máxima tensión de compresión: -23.08 MPa

5.2.2) Armadura

Máxima deformación de compresión: -2.93 ‰
Máxima tensión de compresión: -500.00 MPa
Máxima deformación de tracción: 3.85 ‰
Máxima tensión de tracción: 500.00 MPa

5.2.3) Equilibrio

Valor y posición de las resultantes internas

Resultante	Valor *[kN]*	Y *[m]*	Z *[m]*	Vista 3D
Hormigón	-5768.64	0.000	-0.282	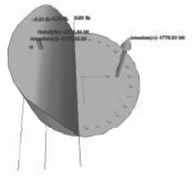
Armadura comprimida	-3667.28	0.000	-0.345	
Armadura traccionada	4778.32	0.000	0.304	

CÁLCULO A CORTANTE SEGÚN EHE

FECHA:	07/06/2017
OBRA:	AUTOVÍA ALMANZORA
ESTRUCTURA:	E1

CÁLCULO ARMADURA DE CORTANTE EN FUSTES DE PILA

REF.	DATOS													RESULTADOS				
	Vrd (ton)	Nd (ton)	Ac (m2)	fck (Mpa)	γc	bo (cm)	d (cm)	cotg(θ)	alpha (º)	As (cm2)	Ap (cm2)	fyk (kp/cm2)	fpk (kp/cm2)	Vrd sin cercos (ton)	As,nec (cm2/ml)	Sep.max (cm)	Vu1 (ton)	Decalaje (m)
3_ELU_01_Max	9.86	524.17	0.79	30	1.5	70	85	1	90	56	0	5100	15700.00	92.51	7.00	30.00	364.29	1.22
3_ELU_01_Min	9.93	869.75	0.79	30	1.5	70	85	1	90	56	0	5100	15700.00	131.78	7.00	30.00	277.69	1.30
3_ELU_02_Max	9.86	360.22	0.79	30	1.5	70	85	1	90	56	0	5100	15700.00	73.88	7.00	30.00	364.29	1.18
3_ELU_02_Min	9.93	705.81	0.79	30	1.5	70	85	1	90	56	0	5100	15700.00	113.15	7.00	30.00	339.79	1.26
3_ELU_SIS_X_Max	25.92	355.42	0.79	30	1.5	70	85	1	90	56	0	5100	15700.00	73.34	7.00	30.00	364.29	0.80
3_ELU_SIS_X_Min	25.91	460.64	0.79	30	1.5	70	85	1	90	56	0	5100	15700.00	85.29	7.00	30.00	364.29	0.81
3_ELU_SIS_Y_Max	25.23	327.32	0.79	30	1.5	70	85	1	90	56	0	5100	15700.00	70.14	7.00	30.00	364.29	0.81
3_ELU_SIS_Y_Min	25.22	488.74	0.79	30	1.5	70	85	1	90	56	0	5100	15700.00	88.49	7.00	30.00	364.29	0.82
3_ELU_SIS_Z_Max	10.43	294.24	0.79	30	1.5	70	85	1	90	56	0	5100	15700.00	66.38	7.00	30.00	364.29	1.13
3_ELU_SIS_Z_Min	10.42	521.82	0.79	30	1.5	70	85	1	90	56	0	5100	15700.00	92.25	7.00	30.00	364.29	1.18
4_ELU_01_Max	9.86	495.34	0.79	30	1.5	70	85	1	90	56	0	5100	15700.00	89.24	7.00	30.00	364.29	1.21
4_ELU_01_Min	9.93	655.33	0.79	30	1.5	70	85	1	90	56	0	5100	15700.00	107.42	7.00	30.00	358.91	1.25
4_ELU_02_Max	9.86	331.39	0.79	30	1.5	70	85	1	90	56	0	5100	15700.00	70.61	7.00	30.00	364.29	1.17
4_ELU_02_Min	9.93	491.38	0.79	30	1.5	70	85	1	90	56	0	5100	15700.00	88.79	7.00	30.00	364.29	1.21
4_ELU_SIS_X_Max	25.92	354.32	0.79	30	1.5	70	85	1	90	56	0	5100	15700.00	73.21	7.00	30.00	364.29	0.80
4_ELU_SIS_X_Min	25.92	442.02	0.79	30	1.5	70	85	1	90	56	0	5100	15700.00	83.18	7.00	30.00	364.29	0.81
4_ELU_SIS_Y_Max	25.23	326.23	0.79	30	1.5	70	85	1	90	56	0	5100	15700.00	70.02	7.00	30.00	364.29	0.81
4_ELU_SIS_Y_Min	25.22	470.11	0.79	30	1.5	70	85	1	90	56	0	5100	15700.00	86.37	7.00	30.00	364.29	0.82
4_ELU_SIS_Z_Max	10.43	293.15	0.79	30	1.5	70	85	1	90	56	0	5100	15700.00	66.26	7.00	30.00	364.29	1.13
4_ELU_SIS_Z_Min	10.42	503.19	0.79	30	1.5	70	85	1	90	56	0	5100	15700.00	90.13	7.00	30.00	364.29	1.18

REFUERZO POR CARGAS CONCENTRADAS SOBRE MACIZOS

Artículo 60 EHE

PROYECTO: AUTOVÍA ALMANZORA. CUCADOR-ENLACE AL-7106

ARMADO DE ZUNCHADO BAJO APOYOS EN FUSTES DE PILA

ESTRUCTURA E1

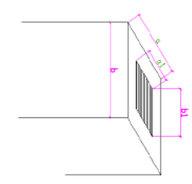

DIMENSIONES MACIZO (m)

a	1	m
a1	0.8	m
b	1.00	m
b1	0.8	m

RESISTENCIA CARACTERÍSTICA HORMIGÓN fck = 300 kp/cm2

COEFICIENTE MINORACIÓN 1.5

AXIL DE DISEÑO (tn) Nd 863.34 tn

ARMADURA NECESARIA EN DIRECCIÓN PARALELA A "a"

As = **10.53** cm2

ARMADURA DISPUESTA

DIÁMETRO(mm)	*Nº REDONDOS*	*Nº CAPAS*	*cm2*
16	7	2	***28.15***

ARMADURA NECESARIA EN DIRECCIÓN PARALELA A "b"

As = **10.53** cm2

ARMADURA DISPUESTA

DIÁMETRO(mm)	*Nº REDONDOS*	*171*	*cm2*
16	7	2	***28.15***

COMPROBACIÓN DE NUDOS Y BIELAS

¿CUMPLE? ***VERDADERO***

ESTRUCTURA E1. PILOTES DE PILAS. REACCIONES EN CABEZA DE PILOTES

Profundidad del punto de inflexión de los pilotes (*)	**3 m**

(*) según modelo de interacción terreno-estructura

Joint	OutputCase	CaseType	F1	F2	N max	N min	Vres	Mred
Text	Text	Text	KN	KN	KN	KN	KN	KN*m
26	CARACT_01	Combination	20.502	11.271	2342.2	1656.1	23.4	70.2
27	CARACT_01	Combination	20.502	11.272	2342.2	1655.4	23.4	70.2
28	CARACT_01	Combination	20.502	11.271	2204.9	1582.1	23.4	70.2
29	CARACT_01	Combination	20.502	11.272	2204.9	1581.5	23.4	70.2
30	CARACT_01	Combination	20.502	11.271	2501.5	1729.8	23.4	70.2
31	CARACT_01	Combination	20.502	11.272	2501.4	1729.4	23.4	70.2
26	CARACT_02	Combination	20.502	11.271	2320.9	1634.8	23.4	70.2
27	CARACT_02	Combination	20.502	11.272	2320.9	1634.1	23.4	70.2
28	CARACT_02	Combination	20.502	11.271	2183.6	1560.8	23.4	70.2
29	CARACT_02	Combination	20.502	11.272	2183.6	1560.1	23.4	70.2
30	CARACT_02	Combination	20.502	11.271	2480.2	1708.5	23.4	70.2
31	CARACT_02	Combination	20.502	11.272	2480.1	1708.1	23.4	70.2
26	ELU_01	Combination	27.677	16.967	3188.5	2072.8	32.5	97.4
27	ELU_01	Combination	27.677	16.967	3188.5	2072.8	32.5	97.4
28	ELU_01	Combination	27.676	16.967	2839.5	1960.3	32.5	97.4
29	ELU_01	Combination	27.676	16.967	2839.5	1960.3	32.5	97.4
30	ELU_01	Combination	27.677	16.967	3569.5	2181.6	32.5	97.4
31	ELU_01	Combination	27.677	16.967	3569.5	2181.6	32.5	97.4
26	ELU_02	Combination	27.677	16.967	2521.5	1405.8	32.5	97.4
27	ELU_02	Combination	27.677	16.967	2521.5	1405.8	32.5	97.4
28	ELU_02	Combination	27.676	16.967	2172.5	1293.3	32.5	97.4
29	ELU_02	Combination	27.676	16.967	2172.5	1293.3	32.5	97.4
30	ELU_02	Combination	27.677	16.967	2902.5	1514.6	32.5	97.4
31	ELU_02	Combination	27.677	16.967	2902.5	1514.6	32.5	97.4
26	ELU_SIS_X	Combination	117.072	34.678	2544.6	932.0	122.1	366.3
27	ELU_SIS_X	Combination	117.072	34.678	2544.6	932.0	122.1	366.3
28	ELU_SIS_X	Combination	117.267	34.678	2718.6	735.3	122.3	366.9
29	ELU_SIS_X	Combination	117.267	34.678	2718.6	735.3	122.3	366.9
30	ELU_SIS_X	Combination	116.877	34.678	2764.2	735.1	121.9	365.7
31	ELU_SIS_X	Combination	116.877	34.678	2764.2	735.1	121.9	365.7
26	ELU_SIS_Y	Combination	35.26	115.1	2059.9	1416.7	120.4	361.1
27	ELU_SIS_Y	Combination	35.26	115.1	2059.9	1416.7	120.4	361.1
28	ELU_SIS_Y	Combination	35.318	115.1	2692.8	761.1	120.4	361.2
29	ELU_SIS_Y	Combination	35.318	115.1	2692.8	761.1	120.4	361.2
30	ELU_SIS_Y	Combination	35.201	115.1	2738.4	760.9	120.4	361.1
31	ELU_SIS_Y	Combination	35.201	115.1	2738.4	760.9	120.4	361.1
26	ELU_SIS_Z	Combination	35.26	34.569	2260.5	1216.1	49.4	148.1
27	ELU_SIS_Z	Combination	35.26	34.569	2260.5	1216.1	49.4	148.1
28	ELU_SIS_Z	Combination	35.318	34.569	2434.5	1019.4	49.4	148.3
29	ELU_SIS_Z	Combination	35.318	34.569	2434.5	1019.4	49.4	148.3
30	ELU_SIS_Z	Combination	35.201	34.569	2480.1	1019.2	49.3	148.0
31	ELU_SIS_Z	Combination	35.201	34.569	2480.1	1019.2	49.3	148.0

COMPROBACIÓN GEOTÉCNICA

Máximo axil de compresión en combinación característica	2501.522	kN
Máximo axil de compresión en combinación sísmica	2764.202	kN

Diámetro del pilote	1	m
Longitud de pilote	15.00	m

Estrato	Espesor (m)	R.fuste (kPa)	R.Punta (kPa)	Carga por fuste(kN)	Carga por punta (kN)
1	7.50	24.00	0.00	565.49	0.00
2	7.50	90.00	6500.00	2120.58	5105.09

CARGA DE HUNDIMIENTO TOTAL	7791.15	kN		cumple?
CARGA ADMISIBLE SERVICIO	3044.73	kN ->	2501.5	VERDADERO
CARGA ADMISIBLE SISMO	3653.67	kN ->	2764.2	VERDADERO

PILOTE_PILA

1.- Norma

Instrucción de Hormigón Estructural (EHE-08)

2.- Detalle

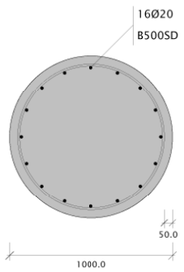

Hormigón: 7853.98 cm²
Armaduras: 5026.55 mm²
Cuantía: 6.40 ‰

Hormigón: HA-30

3.- Materiales

3.1.- Hormigón

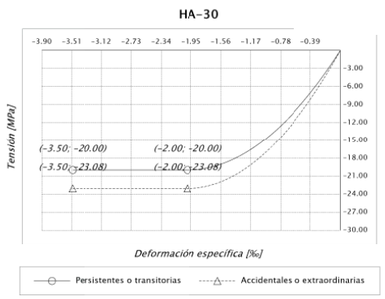

Designación: HA-30
f_{ck}: 30.00 MPa
α_{cc}: 1.000 (Persistentes o transitorias)
α_{cc}: 1.000 (Accidentales o extraordinarias)
γ_c: 1.500 (Persistentes o transitorias)
γ_c: 1.300 (Accidentales o extraordinarias)
f_{cd}: 20.00 MPa (Persistentes o transitorias)
f_{cd}: 23.08 MPa (Accidentales o extraordinarias)
ϵ_{c0}: 2.00 ‰
ϵ_{cu}: 3.50 ‰
n: 2.000 (exponente)

3.2.- Armadura

Empresa:	ACL ESTRUCTURAS	Proyecto:	AUTOVIA ALMANZORA. TRAMO: CUCADOR-ENLACE AL-7106
Dirección:		Código:	ESTRUCTURA E1
Teléfono/Fax:		Autor:	
Sitio web:		Fecha:	07/06/2017

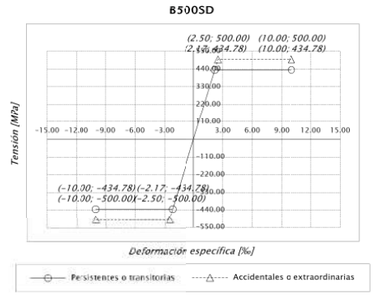

Designación: B500SD
f_{yk}: 500.00 MPa
γ_s: 1.150 (Persistentes o transitorias)
γ_s: 1.000 (Accidentales o extraordinarias)
f_{yd}: 434.78 MPa (Persistentes o transitorias)
f_{yd}: 500.00 MPa (Accidentales o extraordinarias)
$\epsilon_{máx}$: 10.00 ‰
E_s: 200000.0 MPa

4.- Esfuerzos internos aplicados

Combinación	N_d [kN]	Myy_d [kN·m]	Mzz_d [kN·m]	Accidental
26_ELU_01	-2072.80	97.40	0.00	No
27_ELU_01	-2072.80	97.40	1.00	No
28_ELU_01	-1960.30	97.40	2.00	No
29_ELU_01	-1960.30	97.40	3.00	No
30_ELU_01	-2181.60	97.40	4.00	No
31_ELU_01	-2181.60	97.40	5.00	No
26_ELU_02	-1405.80	97.40	6.00	No
27_ELU_02	-1405.80	97.40	7.00	No
28_ELU_02	-1293.30	97.40	8.00	No
29_ELU_02	-1293.30	97.40	9.00	No
30_ELU_02	-1514.60	97.40	10.00	No
31_ELU_02	-1514.60	97.40	11.00	No
26_ELU_SIS_X	-932.00	366.30	12.00	No
27_ELU_SIS_X	-932.00	366.30	13.00	No
28_ELU_SIS_X	-735.30	366.90	14.00	No
29_ELU_SIS_X	-735.30	366.90	15.00	No
30_ELU_SIS_X	-735.10	365.70	16.00	No
31_ELU_SIS_X	-735.10	365.70	17.00	No
26_ELU_SIS_Y	-1416.70	361.10	18.00	No
27_ELU_SIS_Y	-1416.70	361.10	19.00	No
28_ELU_SIS_Y	-761.10	361.20	20.00	No

Combinación	N_d [kN]	Myy_d [kN·m]	Mzz_d [kN·m]	Accidental
29_ELU_SIS_Y	-761.10	361.20	21.00	No
30_ELU_SIS_Y	-760.90	361.10	22.00	No
31_ELU_SIS_Y	-760.90	361.10	23.00	No

5.- Comprobaciones

La sección transversal resiste todas las combinaciones.

Combinación: 29_ELU_SIS_X

5.1.- Comprobación de resistencia a los esfuerzos actuantes

5.1.1) Hormigón

Máxima deformación de compresión: -0.38 ‰

Máxima tensión de compresión: -6.83 MPa

5.1.2) Armadura

Máxima deformación de compresión: -0.31 ‰

Máxima tensión de compresión: -61.64 MPa

Máxima deformación de tracción: 0.51 ‰

Máxima tensión de tracción: 102.51 MPa

5.1.3) Equilibrio

Valor y posición de las resultantes internas

Resultante	Valor [kN]	Y [m]	Z [m]	Vista 3D
Hormigón	-838.03	0.014	-0.332	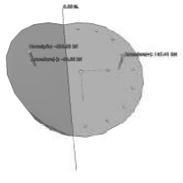
Armadura comprimida	-84.68	0.016	-0.358	
Armadura traccionada	187.41	-0.012	0.309	

5.2.- Comprobación de resistencia para la situación de colapso

Modo de colapsar: Axil y excentricidades Y-Z constantes

N_u: -735.30 kN

Myy_u: 1110.05 kN·m

Mzz_u: 45.38 kN·m

Aprovechamiento: 33.05 %

5.2.1) Hormigón

Máxima deformación de compresión: -3.11 ‰

Máxima tensión de compresión: -20.00 MPa

5.2.2) Armadura

Máxima deformación de compresión: -2.09 ‰

Máxima tensión de compresión: -419.00 MPa

Máxima deformación de tracción: 10.00 ‰

Máxima tensión de tracción: 434.78 MPa

5.2.3) Equilibrio

Valor y posición de las resultantes internas

Resultante	Valor [kN]	Y [m]	Z [m]	Vista 3D
Hormigón	-1792.75	0.015	-0.390	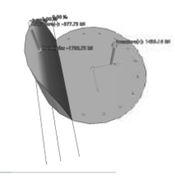
Armadura comprimida	-377.73	0.021	-0.397	
Armadura traccionada	1435.18	-0.007	0.181	

ARMADO DE ENCEPADO DE PILAS

AXILES EN PILOTES

Axil máximo en pilotes en ELU Persistente	3569.50	**kN**
Axil máximo en pilotes en ELU Sismo	2764.20	**kN**

GEOMETRIA ENCEPADO

Nº de pilotes	6.00	
Diámetro de pilotes	1.00	**m**
Dimension longitudinal encepado	4.85	**m**
Dimension transversal encepado	7.15	**m**
Canto encepado	1.40	**m**
Diámetro del fuste de pila	1.00	**m**
Vuelo longitudinal respecto de fuste	1.50	**m**
Vuelo transversal respecto de fuste	1.40	**m**

ARMADURA PRINCIPAL DE CARA INFERIOR DE ENCEPADO

	Longitudinal	Transversal
Recorrido horizontal biela (m)	1.25	1.15
Recorrido vertical (m)	1.11	1.11
Td (kN)	4037.90	3714.86
As,nec (cm2)	100.95	92.87
Nº de barras del 25	21	19

ARMADURA SECUNDARIA ENCEPADO

	Longitudinal	Transversal
Cuantía total a disponer (cm2)	75.71	46.44
Anchura total de reparto (m)	4.15	2.85
Cuantía a disponer (cm2/ml)	18.24	16.29

CÁLCULO DE ESTRIBOS

c/ COLUMELA nº15, C.P. 11004 CÁDIZ. Tlf: 956222763 Fax: 956210106
e-mail: acl@acl-estructuras.com http://www.acl-estructuras.com

ESTRUCTURA E1. PILOTES DE ESTRIBOS. REACCIONES EN CABEZA DE PILOTES

Profundidad del punto de inflexión de los pilotes (*)	3 m

(*) según modelo de interacción terreno-estructura

Joint	OutputCase	CaseType	StepType	F1	F2	Axil	Vres	Mred
Text	Text	Text	Text	KN	KN	KN	kN	KN*m
80	CARACT_01	Combination	Max	-59.58	13.06	3184.51	60.99	182.98
81	CARACT_01	Combination	Max	-60.04	11.26	2712.17	61.09	183.26
82	CARACT_01	Combination	Max	-59.12	15.61	3264.46	61.15	183.44
83	CARACT_01	Combination	Max	-58.64	15.90	2994.06	60.76	182.28
88	CARACT_01	Combination	Max	-59.58	12.39	2004.48	60.85	182.56
89	CARACT_01	Combination	Max	-60.04	10.59	1534.18	60.97	182.90
90	CARACT_01	Combination	Max	-59.12	14.93	2088.86	60.97	182.92
91	CARACT_01	Combination	Max	-58.64	15.21	1818.04	60.58	181.75
80	CARACT_01	Combination	Min	-117.05	12.56	2547.90	117.72	353.16
81	CARACT_01	Combination	Min	-117.51	10.69	2187.22	117.99	353.98
82	CARACT_01	Combination	Min	-116.59	15.21	2569.39	117.58	352.74
83	CARACT_01	Combination	Min	-116.13	15.29	2370.98	117.14	351.41
88	CARACT_01	Combination	Min	-117.05	11.87	1394.99	117.65	352.94
89	CARACT_01	Combination	Min	-117.51	10.00	1031.59	117.93	353.79
90	CARACT_01	Combination	Min	-116.59	14.53	1421.10	117.49	352.48
91	CARACT_01	Combination	Min	-116.13	14.60	1226.40	117.05	351.14
80	CARACT_02	Combination	Max	-62.02	13.05	3210.63	63.37	190.12
81	CARACT_02	Combination	Max	-62.48	11.24	2734.89	63.48	190.43
82	CARACT_02	Combination	Max	-61.56	15.63	3290.59	63.51	190.53
83	CARACT_02	Combination	Max	-61.08	15.92	3016.79	63.12	189.36
88	CARACT_02	Combination	Max	-62.02	12.37	1997.71	63.24	189.71
89	CARACT_02	Combination	Max	-62.48	10.57	1524.06	63.36	190.09
90	CARACT_02	Combination	Max	-61.56	14.94	2082.10	63.34	190.03
91	CARACT_02	Combination	Max	-61.08	15.23	1807.91	62.95	188.85
80	CARACT_02	Combination	Min	-119.48	12.54	2574.03	120.14	360.42
81	CARACT_02	Combination	Min	-119.94	10.67	2209.94	120.42	361.25
82	CARACT_02	Combination	Min	-119.03	15.22	2595.52	120.00	360.00
83	CARACT_02	Combination	Min	-118.57	15.31	2393.71	119.55	358.66
88	CARACT_02	Combination	Min	-119.48	11.85	1388.23	120.07	360.21
89	CARACT_02	Combination	Min	-119.94	9.98	1021.47	120.36	361.07
90	CARACT_02	Combination	Min	-119.03	14.54	1414.34	119.91	359.74
91	CARACT_02	Combination	Min	-118.57	14.62	1216.28	119.47	358.40
80	ELU_01	Combination	Max	-84.90	19.81	4293.45	87.18	261.55
81	ELU_01	Combination	Max	-85.61	17.28	3645.28	87.34	262.01
82	ELU_01	Combination	Max	-84.20	23.22	4469.62	87.34	262.03
83	ELU_01	Combination	Max	-83.47	23.56	4163.61	86.73	260.19
88	ELU_01	Combination	Max	-84.90	18.79	2642.77	86.96	260.87
89	ELU_01	Combination	Max	-85.61	16.26	1999.19	87.14	261.42
90	ELU_01	Combination	Max	-84.20	22.16	2826.69	87.07	261.20
91	ELU_01	Combination	Max	-83.47	22.50	2521.60	86.45	259.35
80	ELU_01	Combination	Min	-162.99	19.05	3446.75	164.10	492.31
81	ELU_01	Combination	Min	-163.68	16.47	2911.99	164.51	493.53
82	ELU_01	Combination	Min	-162.31	22.63	3486.84	163.88	491.64
83	ELU_01	Combination	Min	-161.62	22.61	3225.42	163.19	489.58
88	ELU_01	Combination	Min	-162.99	18.00	1838.15	163.98	491.95
89	ELU_01	Combination	Min	-163.68	15.42	1299.61	164.41	493.23
90	ELU_01	Combination	Min	-162.31	21.61	1884.87	163.74	491.23
91	ELU_01	Combination	Min	-161.62	21.58	1627.26	163.05	489.16
80	ELU_02	Combination	Max	-86.82	20.20	3536.54	89.14	267.42
81	ELU_02	Combination	Max	-87.53	18.00	2986.92	89.36	268.09
82	ELU_02	Combination	Max	-86.12	22.83	3712.71	89.09	267.27
83	ELU_02	Combination	Max	-85.39	22.83	3505.25	88.39	265.17
88	ELU_02	Combination	Max	-86.82	19.18	1871.25	88.91	266.74
89	ELU_02	Combination	Max	-87.53	16.99	1327.16	89.16	267.49
90	ELU_02	Combination	Max	-86.12	21.77	2055.17	88.83	266.48
91	ELU_02	Combination	Max	-85.39	21.77	1849.58	88.12	264.37
80	ELU_02	Combination	Min	-164.91	19.44	2689.84	166.05	498.16
81	ELU_02	Combination	Min	-165.60	17.19	2253.63	166.49	499.48
82	ELU_02	Combination	Min	-164.23	22.24	2729.93	165.73	497.18
83	ELU_02	Combination	Min	-163.54	21.88	2567.07	165.00	494.99
88	ELU_02	Combination	Min	-164.91	18.39	1066.62	165.93	497.80
89	ELU_02	Combination	Min	-165.60	16.15	627.59	166.39	499.17
90	ELU_02	Combination	Min	-164.23	21.22	1113.35	165.59	496.77
91	ELU_02	Combination	Min	-163.54	20.85	955.23	164.86	494.59
80	ELU_SIS_X	Combination	Max	100.73	59.33	3657.89	116.91	350.73
81	ELU_SIS_X	Combination	Max	103.96	55.15	3617.86	117.68	353.04
82	ELU_SIS_X	Combination	Max	100.74	61.66	3667.51	118.11	354.32
83	ELU_SIS_X	Combination	Max	103.96	59.42	3634.00	119.74	359.23
88	ELU_SIS_X	Combination	Max	100.73	60.26	2697.83	117.38	352.15
89	ELU_SIS_X	Combination	Max	103.96	56.12	2651.14	118.13	354.40
90	ELU_SIS_X	Combination	Max	100.74	62.58	2707.63	118.59	355.77
91	ELU_SIS_X	Combination	Max	103.96	60.37	2667.56	120.22	360.66
80	ELU_SIS_X	Combination	Min	-250.76	-61.66	1741.21	258.22	774.67
81	ELU_SIS_X	Combination	Min	-253.97	-59.40	1190.82	260.83	782.48
82	ELU_SIS_X	Combination	Min	-250.76	-59.33	1742.48	257.68	773.04
83	ELU_SIS_X	Combination	Min	-253.97	-55.14	1196.79	259.89	779.67
88	ELU_SIS_X	Combination	Min	-250.76	-62.58	740.46	258.45	775.34
89	ELU_SIS_X	Combination	Min	-253.97	-60.36	195.42	261.05	783.14
90	ELU_SIS_X	Combination	Min	-250.76	-60.25	741.71	257.89	773.68
91	ELU_SIS_X	Combination	Min	-253.97	-56.11	201.07	260.10	780.29
80	ELU_SIS_Y	Combination	Max	-16.61	200.31	3097.04	201.00	603.00
81	ELU_SIS_Y	Combination	Max	-5.85	188.56	3672.54	188.65	565.96
82	ELU_SIS_Y	Combination	Max	-16.61	202.64	3106.66	203.32	609.95
83	ELU_SIS_Y	Combination	Max	-5.84	192.83	3688.68	192.92	578.75
88	ELU_SIS_Y	Combination	Max	-16.61	203.38	2138.17	204.06	612.17
89	ELU_SIS_Y	Combination	Max	-5.85	191.72	2706.32	191.81	575.42
90	ELU_SIS_Y	Combination	Max	-16.61	205.70	2147.97	206.37	619.10
91	ELU_SIS_Y	Combination	Max	-5.84	195.97	2722.74	196.06	588.18
80	ELU_SIS_Y	Combination	Min	-133.41	-202.64	2302.06	242.61	727.83
81	ELU_SIS_Y	Combination	Min	-144.17	-192.81	1136.13	240.75	722.24
82	ELU_SIS_Y	Combination	Min	-133.41	-200.31	2303.33	240.67	722.00
83	ELU_SIS_Y	Combination	Min	-144.17	-188.55	1142.10	237.35	712.06
88	ELU_SIS_Y	Combination	Min	-133.41	-205.70	1300.12	245.18	735.53
89	ELU_SIS_Y	Combination	Min	-144.17	-195.96	140.25	243.28	729.83
90	ELU_SIS_Y	Combination	Min	-133.41	-203.37	1301.37	243.23	729.68
91	ELU_SIS_Y	Combination	Min	-144.17	-191.71	145.90	239.87	719.60
80	ELU_SIS_Z	Combination	Max	-18.00	59.42	3092.36	62.08	186.25
81	ELU_SIS_Z	Combination	Max	-14.77	55.26	3031.54	57.19	171.58
82	ELU_SIS_Z	Combination	Max	-17.99	61.74	3101.98	64.31	192.93
83	ELU_SIS_Z	Combination	Max	-14.76	59.52	3047.67	61.32	183.97
88	ELU_SIS_Z	Combination	Max	-18.00	60.34	2135.99	62.97	188.90
89	ELU_SIS_Z	Combination	Max	-14.77	56.21	2070.18	58.12	174.35
90	ELU_SIS_Z	Combination	Max	-17.99	62.66	2145.79	65.19	195.57
91	ELU_SIS_Z	Combination	Max	-14.76	60.46	2086.60	62.24	186.72
80	ELU_SIS_Z	Combination	Min	-132.03	-61.74	2306.73	145.75	437.25
81	ELU_SIS_Z	Combination	Min	-135.25	-59.50	1777.14	147.76	443.28
82	ELU_SIS_Z	Combination	Min	-132.03	-59.41	2308.00	144.78	434.33
83	ELU_SIS_Z	Combination	Min	-135.25	-55.25	1783.11	146.10	438.29
88	ELU_SIS_Z	Combination	Min	-132.03	-62.66	1302.30	146.14	438.43
89	ELU_SIS_Z	Combination	Min	-135.25	-60.45	776.38	148.14	444.43
90	ELU_SIS_Z	Combination	Min	-132.03	-60.33	1303.55	145.16	435.48
91	ELU_SIS_Z	Combination	Min	-135.25	-56.20	782.04	146.46	439.38

3688.68

COMPROBACIÓN GEOTÉCNICA

Máximo axil de compresión en combinación característica	3290.59	kN
Máximo axil de compresión en combinación sísmica	3688.68	kN

Diámetro del pilote	1	m
Longitud de pilote	17.00	m

Estrato	Espesor (m)	R.fuste (kPa)	R.Punta (kPa)	Carga por fuste(kN)	Carga por punta (kN)
1	7.50	24.00	0.00	565.49	0.00
2	9.50	90.00	6500.00	2686.06	5105.09

CARGA DE HUNDIMIENTO TOTAL	8356.64	kN		cumple?
CARGA ADMISIBLE SERVICIO	3327.47	kN ->	3290.6	VERDADERO
CARGA ADMISIBLE SISMO	3992.96	kN ->	3688.7	VERDADERO

Empresa:	ACL ESTRUCTURAS	Proyecto:	AUTOVIA ALMANZORA. TRAMO: CUCADOR-ENLACE AL-7106
Dirección:		Código:	ESTRUCTURA E1
Teléfono/Fax:		Autor:	
Sitio web:		Fecha:	07/06/2017

PILOTE_ESTRIBO

1.- Norma

Instrucción de Hormigón Estructural (EHE-08)

2.- Detalle

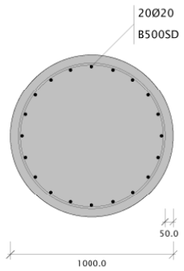

Hormigón: HA-30

Hormigón: 7853.98 cm²
Armaduras: 6283.19 mm²
Cuantía: 8.00 ‰

3.- Materiales

3.1.- Hormigón

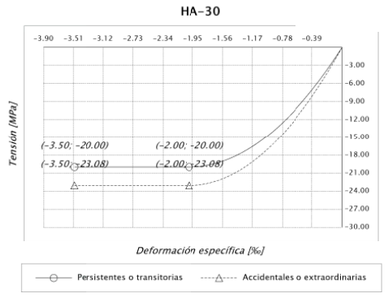

Designación: HA-30
f_{ck}: 30.00 MPa
α_{cc}: 1.000 (Persistentes o transitorias)
α_{cc}: 1.000 (Accidentales o extraordinarias)
γ_c: 1.500 (Persistentes o transitorias)
γ_c: 1.300 (Accidentales o extraordinarias)
f_{cd}: 20.00 MPa (Persistentes o transitorias)
f_{cd}: 23.08 MPa (Accidentales o extraordinarias)
ϵ_{c0}: 2.00 ‰
ϵ_{cu}: 3.50 ‰
n: 2.000 (exponente)

3.2.- Armadura

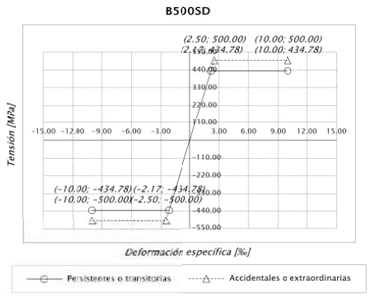

Designación: B500SD
f_{yk}: 500.00 MPa
γ_s: 1.150 (Persistentes o transitorias)
γ_s: 1.000 (Accidentales o extraordinarias)
f_{yd}: 434.78 MPa (Persistentes o transitorias)
f_{yd}: 500.00 MPa (Accidentales o extraordinarias)
$\epsilon_{máx}$: 10.00 ‰
E_s: 200000.0 MPa

4.- Esfuerzos internos aplicados

Combinación	N_d [kN]	Myy_d [kN·m]	Mzz_d [kN·m]	Accidental
80_ELU_01_Max	-4293.45	261.55	0.00	No
81_ELU_01_Max	-3645.28	262.01	0.00	No
82_ELU_01_Max	-4469.62	262.03	0.00	No
83_ELU_01_Max	-4163.61	260.19	0.00	No
88_ELU_01_Max	-2642.77	260.87	0.00	No
89_ELU_01_Max	-1999.19	261.42	0.00	No
90_ELU_01_Max	-2826.69	261.20	0.00	No
91_ELU_01_Max	-2521.60	259.35	0.00	No
80_ELU_01_Min	-3446.75	492.31	0.00	No
81_ELU_01_Min	-2911.99	493.53	0.00	No
82_ELU_01_Min	-3486.84	491.64	0.00	No
83_ELU_01_Min	-3225.42	489.58	0.00	No
88_ELU_01_Min	-1838.15	491.95	0.00	No
89_ELU_01_Min	-1299.61	493.23	0.00	No
90_ELU_01_Min	-1884.87	491.23	0.00	No
91_ELU_01_Min	-1627.26	489.16	0.00	No
80_ELU_02_Max	-3536.54	267.42	0.00	No
81_ELU_02_Max	-2986.92	268.09	0.00	No
82_ELU_02_Max	-3712.71	267.27	0.00	No
83_ELU_02_Max	-3505.25	265.17	0.00	No
88_ELU_02_Max	-1871.25	266.74	0.00	No

Combinación	N_d [kN]	Myy_d [kN·m]	Mzz_d [kN·m]	Accidental
89_ELU_02_Max	-1327.16	267.49	0.00	No
90_ELU_02_Max	-2055.17	266.48	0.00	No
91_ELU_02_Max	-1849.58	264.37	0.00	No
80_ELU_02_Min	-2689.84	498.16	0.00	No
81_ELU_02_Min	-2253.63	499.48	0.00	No
82_ELU_02_Min	-2729.93	497.18	0.00	No
83_ELU_02_Min	-2567.07	494.99	0.00	No
88_ELU_02_Min	-1066.62	497.80	0.00	No
89_ELU_02_Min	-627.59	499.17	0.00	No
90_ELU_02_Min	-1113.35	496.77	0.00	No
91_ELU_02_Min	-955.23	494.59	0.00	No
80_ELU_SIS_X_Max	-3657.89	350.73	0.00	No
81_ELU_SIS_X_Max	-3617.86	353.04	0.00	No
82_ELU_SIS_X_Max	-3667.51	354.32	0.00	No
83_ELU_SIS_X_Max	-3634.00	359.23	0.00	No
88_ELU_SIS_X_Max	-2697.83	352.15	0.00	No
89_ELU_SIS_X_Max	-2651.14	354.40	0.00	No
90_ELU_SIS_X_Max	-2707.63	355.77	0.00	No
91_ELU_SIS_X_Max	-2667.56	360.66	0.00	No
80_ELU_SIS_X_Min	-1741.21	774.67	0.00	No
81_ELU_SIS_X_Min	-1190.82	782.48	0.00	No
82_ELU_SIS_X_Min	-1742.48	773.04	0.00	No
83_ELU_SIS_X_Min	-1196.79	779.67	0.00	No
88_ELU_SIS_X_Min	-740.46	775.34	0.00	No
89_ELU_SIS_X_Min	-195.42	783.14	0.00	No
90_ELU_SIS_X_Min	-741.71	773.68	0.00	No
91_ELU_SIS_X_Min	-201.07	780.29	0.00	No
80_ELU_SIS_Y_Max	-3097.04	603.00	0.00	No
81_ELU_SIS_Y_Max	-3672.54	565.96	0.00	No
82_ELU_SIS_Y_Max	-3106.66	609.95	0.00	No
83_ELU_SIS_Y_Max	-3688.68	578.75	0.00	No
88_ELU_SIS_Y_Max	-2138.17	612.17	0.00	No
89_ELU_SIS_Y_Max	-2706.32	575.42	0.00	No
90_ELU_SIS_Y_Max	-2147.97	619.10	0.00	No

Combinación	N_d [kN]	Myy_d [kN·m]	Mzz_d [kN·m]	Accidental
91_ELU_SIS_Y_Max	-2722.74	588.18	0.00	No
80_ELU_SIS_Y_Min	-2302.06	727.83	0.00	No
81_ELU_SIS_Y_Min	-1136.13	722.24	0.00	No
82_ELU_SIS_Y_Min	-2303.33	722.00	0.00	No
83_ELU_SIS_Y_Min	-1142.10	712.06	0.00	No
88_ELU_SIS_Y_Min	-1300.12	735.53	0.00	No
89_ELU_SIS_Y_Min	-140.25	729.83	0.00	No
90_ELU_SIS_Y_Min	-1301.37	729.68	0.00	No
91_ELU_SIS_Y_Min	-145.90	719.60	0.00	No
80_ELU_SIS_Z_Max	-3092.36	186.25	0.00	No
81_ELU_SIS_Z_Max	-3031.54	171.58	0.00	No
82_ELU_SIS_Z_Max	-3101.98	192.93	0.00	No
83_ELU_SIS_Z_Max	-3047.67	183.97	0.00	No
88_ELU_SIS_Z_Max	-2135.99	188.90	0.00	No
89_ELU_SIS_Z_Max	-2070.18	174.35	0.00	No
90_ELU_SIS_Z_Max	-2145.79	195.57	0.00	No
91_ELU_SIS_Z_Max	-2086.60	186.72	0.00	No
80_ELU_SIS_Z_Min	-2306.73	437.25	0.00	No
81_ELU_SIS_Z_Min	-1777.14	443.28	0.00	No
82_ELU_SIS_Z_Min	-2308.00	434.33	0.00	No
83_ELU_SIS_Z_Min	-1783.11	438.29	0.00	No
88_ELU_SIS_Z_Min	-1302.30	438.43	0.00	No
89_ELU_SIS_Z_Min	-776.38	444.43	0.00	No
90_ELU_SIS_Z_Min	-1303.55	435.48	0.00	No
91_ELU_SIS_Z_Min	-782.04	439.38	0.00	No

5.- Comprobaciones

La sección transversal resiste todas las combinaciones.

Combinación: 89_ELU_SIS_X_Min

5.1.- Comprobación de resistencia a los esfuerzos actuantes

5.1.1) Hormigón

Máxima deformación de compresión: -0.89 ‰

Máxima tensión de compresión: -13.80 MPa

5.1.2) Armadura

Máxima deformación de compresión: -0.66 ‰
Máxima tensión de compresión: -131.12 MPa
Máxima deformación de tracción: 2.09 ‰
Máxima tensión de tracción: 417.41 MPa

5.1.3) Equilibrio

Valor y posición de las resultantes internas

Resultante	Valor [kN]	Y [m]	Z [m]	Vista 3D
Hormigón	-1094.84	0.000	-0.378	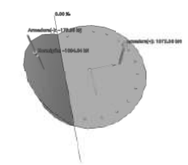
Armadura comprimida	-175.96	0.000	-0.385	
Armadura traccionada	1075.38	0.000	0.280	

5.2.- Comprobación de resistencia para la situación de colapso

Modo de colapsar: Axil y excentricidades Y-Z constantes
N_u: -195.42 kN
Myy_u: 1126.53 kN·m
Mzz_u: 0.00 kN·m
Aprovechamiento: 69.52 %

5.2.1) Hormigón

Máxima deformación de compresión: -2.91 ‰
Máxima tensión de compresión: -20.00 MPa

5.2.2) Armadura

Máxima deformación de compresión: -1.91 ‰
Máxima tensión de compresión: -382.12 MPa
Máxima deformación de tracción: 10.00 ‰
Máxima tensión de tracción: 434.78 MPa

Empresa:	ACL ESTRUCTURAS	Proyecto:	AUTOVIA ALMANZORA. TRAMO: CUCADOR-ENLACE AL-7106
Dirección:		Código:	ESTRUCTURA E1
Teléfono/Fax:		Autor:	
Sitio web:		Fecha:	07/06/2017

5.2.3) Equilibrio

Valor y posición de las resultantes internas

Resultante	Valor [kN]	Y [m]	Z [m]	Vista 3D
Hormigón	-1618.82	0.000	-0.397	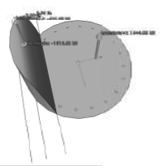
Armadura comprimida	-420.68	0.000	-0.399	
Armadura traccionada	1844.08	0.000	0.171	

CÁLCULO A CORTANTE SEGÚN EHE

FECHA:	07/06/2017
OBRA:	AUTOVÍA ALMANZORA
ESTRUCTURA:	E1

CÁLCULO ARMADURA DE CORTANTE EN PILOTES DE ESTRIBO

REF.	DATOS												RESULTADOS				
	Vrd (ton)	Nd (ton)	Ac (m2)	fck (Mpa)	γc	bo (cm)	d (cm)	cotg(θ)	alpha (º)	As (cm2)	Ap (cm2)	fyk (kp/cm2)	fpk (kp/cm2)	Vrd sin cercos (ton)	As,nec (cm2/ml)	Sep.max (cm)	Vu1 (ton)	Decalaje (m)
80_ELU_01_Max	8.89	437.66	0.79	30	1.5	70	85	1	90	15.708	0	5100	15700.00	71.30	7.00	30.00	364.29	1.18
81_ELU_01_Max	8.90	371.59	0.79	30	1.5	70	85	1	90	15.708	0	5100	15700.00	63.79	7.00	30.00	364.29	1.15
82_ELU_01_Max	8.90	455.62	0.79	30	1.5	70	85	1	90	15.708	0	5100	15700.00	73.34	7.00	30.00	364.29	1.19
83_ELU_01_Max	8.84	424.43	0.79	30	1.5	70	85	1	90	15.708	0	5100	15700.00	69.80	7.00	30.00	364.29	1.18
88_ELU_01_Max	8.86	269.40	0.79	30	1.5	70	85	1	90	15.708	0	5100	15700.00	52.18	7.00	30.00	364.29	1.11
89_ELU_01_Max	8.88	203.79	0.79	30	1.5	70	85	1	90	15.708	0	5100	15700.00	44.73	7.00	30.00	364.29	1.08
90_ELU_01_Max	8.88	288.14	0.79	30	1.5	70	85	1	90	15.708	0	5100	15700.00	54.31	7.00	30.00	364.29	1.12
91_ELU_01_Max	8.81	257.04	0.79	30	1.5	70	85	1	90	15.708	0	5100	15700.00	50.78	7.00	30.00	364.29	1.11
80_ELU_01_Min	16.73	351.35	0.79	30	1.5	70	85	1	90	15.708	0	5100	15700.00	61.49	7.00	30.00	364.29	0.88
81_ELU_01_Min	16.77	296.84	0.79	30	1.5	70	85	1	90	15.708	0	5100	15700.00	55.30	7.00	30.00	364.29	0.87
82_ELU_01_Min	16.71	355.44	0.79	30	1.5	70	85	1	90	15.708	0	5100	15700.00	61.96	7.00	30.00	364.29	0.88
83_ELU_01_Min	16.64	328.79	0.79	30	1.5	70	85	1	90	15.708	0	5100	15700.00	58.93	7.00	30.00	364.29	0.88
88_ELU_01_Min	16.72	187.37	0.79	30	1.5	70	85	1	90	15.708	0	5100	15700.00	42.86	7.00	30.00	364.29	0.84
89_ELU_01_Min	16.76	132.48	0.79	30	1.5	70	85	1	90	15.708	0	5100	15700.00	36.62	7.00	30.00	364.29	0.82
90_ELU_01_Min	16.69	192.14	0.79	30	1.5	70	85	1	90	15.708	0	5100	15700.00	43.40	7.00	30.00	364.29	0.84
91_ELU_01_Min	16.62	165.88	0.79	30	1.5	70	85	1	90	15.708	0	5100	15700.00	40.42	7.00	30.00	364.29	0.84
80_ELU_02_Max	9.09	360.50	0.79	30	1.5	70	85	1	90	15.708	0	5100	15700.00	62.53	7.00	30.00	364.29	1.14
81_ELU_02_Max	9.11	304.48	0.79	30	1.5	70	85	1	90	15.708	0	5100	15700.00	56.17	7.00	30.00	364.29	1.11
82_ELU_02_Max	9.08	378.46	0.79	30	1.5	70	85	1	90	15.708	0	5100	15700.00	64.57	7.00	30.00	364.29	1.15
83_ELU_02_Max	9.01	357.31	0.79	30	1.5	70	85	1	90	15.708	0	5100	15700.00	62.17	7.00	30.00	364.29	1.14
88_ELU_02_Max	9.06	190.75	0.79	30	1.5	70	85	1	90	15.708	0	5100	15700.00	43.24	7.00	30.00	364.29	1.07
89_ELU_02_Max	9.09	135.29	0.79	30	1.5	70	85	1	90	15.708	0	5100	15700.00	36.94	7.00	30.00	364.29	1.04
90_ELU_02_Max	9.05	209.50	0.79	30	1.5	70	85	1	90	15.708	0	5100	15700.00	45.37	7.00	30.00	364.29	1.07
91_ELU_02_Max	8.98	188.54	0.79	30	1.5	70	85	1	90	15.708	0	5100	15700.00	42.99	7.00	30.00	364.29	1.07
80_ELU_02_Min	16.93	274.19	0.79	30	1.5	70	85	1	90	15.708	0	5100	15700.00	52.73	7.00	30.00	364.29	0.86
81_ELU_02_Min	16.97	229.73	0.79	30	1.5	70	85	1	90	15.708	0	5100	15700.00	47.67	7.00	30.00	364.29	0.85
82_ELU_02_Min	16.89	278.28	0.79	30	1.5	70	85	1	90	15.708	0	5100	15700.00	53.19	7.00	30.00	364.29	0.86
83_ELU_02_Min	16.82	261.68	0.79	30	1.5	70	85	1	90	15.708	0	5100	15700.00	51.30	7.00	30.00	364.29	0.86
88_ELU_02_Min	16.91	108.73	0.79	30	1.5	70	85	1	90	15.708	0	5100	15700.00	33.92	7.00	30.00	364.29	0.81

CÁLCULO A CORTANTE SEGÚN EHE

FECHA:	07/06/2017
OBRA:	AUTOVÍA ALMANZORA
ESTRUCTURA:	E1

CÁLCULO ARMADURA DE CORTANTE EN PILOTES DE ESTRIBO

REF.	DATOS													RESULTADOS				
	Vrd (ton)	Nd (ton)	Ac (m2)	fck (Mpa)	γc	bo (cm)	d (cm)	cotg(θ)	alpha (º)	As (cm2)	Ap (cm2)	fyk (kp/cm2)	fpk (kp/cm2)	Vrd sin cercos (ton)	As,nec (cm2/ml)	Sep.max (cm)	Vu1 (ton)	Decalaje (m)
89_ELU_02_Min	16.96	63.97	0.79	30	1.5	70	85	1	90	15.708	0	5100	15700.00	28.84	7.00	30.00	364.29	0.80
90_ELU_02_Min	16.88	113.49	0.79	30	1.5	70	85	1	90	15.708	0	5100	15700.00	34.46	7.00	30.00	364.29	0.82
91_ELU_02_Min	16.81	97.37	0.79	30	1.5	70	85	1	90	15.708	0	5100	15700.00	32.63	7.00	30.00	364.29	0.81
80_ELU_SIS_X_Max	11.92	372.87	0.79	30	1.5	70	85	1	90	15.708	0	5100	15700.00	63.94	7.00	30.00	364.29	1.01
81_ELU_SIS_X_Max	12.00	368.79	0.79	30	1.5	70	85	1	90	15.708	0	5100	15700.00	63.48	7.00	30.00	364.29	1.00
82_ELU_SIS_X_Max	12.04	373.85	0.79	30	1.5	70	85	1	90	15.708	0	5100	15700.00	64.05	7.00	30.00	364.29	1.00
83_ELU_SIS_X_Max	12.21	370.44	0.79	30	1.5	70	85	1	90	15.708	0	5100	15700.00	63.66	7.00	30.00	364.29	1.00
88_ELU_SIS_X_Max	11.97	275.01	0.79	30	1.5	70	85	1	90	15.708	0	5100	15700.00	52.82	7.00	30.00	364.29	0.98
89_ELU_SIS_X_Max	12.04	270.25	0.79	30	1.5	70	85	1	90	15.708	0	5100	15700.00	52.28	7.00	30.00	364.29	0.97
90_ELU_SIS_X_Max	12.09	276.01	0.79	30	1.5	70	85	1	90	15.708	0	5100	15700.00	52.93	7.00	30.00	364.29	0.97
91_ELU_SIS_X_Max	12.25	271.92	0.79	30	1.5	70	85	1	90	15.708	0	5100	15700.00	52.47	7.00	30.00	364.29	0.96
80_ELU_SIS_X_Min	26.32	177.49	0.79	30	1.5	70	85	1	90	15.708	0	5100	15700.00	41.74	7.00	30.00	364.29	0.74
81_ELU_SIS_X_Min	26.59	121.39	0.79	30	1.5	70	85	1	90	15.708	0	5100	15700.00	35.36	7.00	30.00	364.29	0.73
82_ELU_SIS_X_Min	26.27	177.62	0.79	30	1.5	70	85	1	90	15.708	0	5100	15700.00	41.75	7.00	30.00	364.29	0.74
83_ELU_SIS_X_Min	26.49	122.00	0.79	30	1.5	70	85	1	90	15.708	0	5100	15700.00	35.43	7.00	30.00	364.29	0.73
88_ELU_SIS_X_Min	26.35	75.48	0.79	30	1.5	70	85	1	90	15.708	0	5100	15700.00	30.14	7.00	30.00	364.29	0.72
89_ELU_SIS_X_Min	26.61	19.92	0.79	30	1.5	70	85	1	90	15.708	0	5100	15700.00	23.83	7.00	30.00	364.29	0.71
90_ELU_SIS_X_Min	26.29	75.61	0.79	30	1.5	70	85	1	90	15.708	0	5100	15700.00	30.16	7.00	30.00	364.29	0.72
91_ELU_SIS_X_Min	26.51	20.50	0.79	30	1.5	70	85	1	90	15.708	0	5100	15700.00	23.90	7.00	30.00	364.29	0.71
80_ELU_SIS_Y_Max	20.49	315.70	0.79	30	1.5	70	85	1	90	15.708	0	5100	15700.00	57.44	7.00	30.00	364.29	0.82
81_ELU_SIS_Y_Max	19.23	374.37	0.79	30	1.5	70	85	1	90	15.708	0	5100	15700.00	64.11	7.00	30.00	364.29	0.84
82_ELU_SIS_Y_Max	20.73	316.68	0.79	30	1.5	70	85	1	90	15.708	0	5100	15700.00	57.55	7.00	30.00	364.29	0.81
83_ELU_SIS_Y_Max	19.67	376.01	0.79	30	1.5	70	85	1	90	15.708	0	5100	15700.00	64.30	7.00	30.00	364.29	0.84
88_ELU_SIS_Y_Max	20.80	217.96	0.79	30	1.5	70	85	1	90	15.708	0	5100	15700.00	46.34	7.00	30.00	364.29	0.79
89_ELU_SIS_Y_Max	19.55	275.87	0.79	30	1.5	70	85	1	90	15.708	0	5100	15700.00	52.92	7.00	30.00	364.29	0.82
90_ELU_SIS_Y_Max	21.04	218.96	0.79	30	1.5	70	85	1	90	15.708	0	5100	15700.00	46.45	7.00	30.00	364.29	0.79
91_ELU_SIS_Y_Max	19.99	277.55	0.79	30	1.5	70	85	1	90	15.708	0	5100	15700.00	53.11	7.00	30.00	364.29	0.81
80_ELU_SIS_Y_Min	24.73	234.66	0.79	30	1.5	70	85	1	90	15.708	0	5100	15700.00	48.23	7.00	30.00	364.29	0.76
81_ELU_SIS_Y_Min	24.54	115.81	0.79	30	1.5	70	85	1	90	15.708	0	5100	15700.00	34.73	7.00	30.00	364.29	0.74

CÁLCULO A CORTANTE SEGÚN EHE

FECHA:	07/06/2017
OBRA:	AUTOVÍA ALMANZORA
ESTRUCTURA:	E1

CÁLCULO ARMADURA DE CORTANTE EN PILOTES DE ESTRIBO

REF.	DATOS													RESULTADOS				
	Vrd (ton)	Nd (ton)	Ac (m2)	fck (Mpa)	γc	bo (cm)	d (cm)	cotg(θ)	alpha (º)	As (cm2)	Ap (cm2)	fyk (kp/cm2)	fpk (kp/cm2)	Vrd sin cercos (ton)	As,nec (cm2/ml)	Sep.max (cm)	Vu1 (ton)	Decalaje (m)
82_ELU_SIS_Y_Min	24.53	234.79	0.79	30	1.5	70	85	1	90	15.708	0	5100	15700.00	48.25	7.00	30.00	364.29	0.76
83_ELU_SIS_Y_Min	24.20	116.42	0.79	30	1.5	70	85	1	90	15.708	0	5100	15700.00	34.80	7.00	30.00	364.29	0.74
88_ELU_SIS_Y_Min	24.99	132.53	0.79	30	1.5	70	85	1	90	15.708	0	5100	15700.00	36.63	7.00	30.00	364.29	0.74
89_ELU_SIS_Y_Min	24.80	14.30	0.79	30	1.5	70	85	1	90	15.708	0	5100	15700.00	23.19	7.00	30.00	364.29	0.72
90_ELU_SIS_Y_Min	24.79	132.66	0.79	30	1.5	70	85	1	90	15.708	0	5100	15700.00	36.64	7.00	30.00	364.29	0.74
91_ELU_SIS_Y_Min	24.45	14.87	0.79	30	1.5	70	85	1	90	15.708	0	5100	15700.00	23.26	7.00	30.00	364.29	0.72
80_ELU_SIS_Z_Max	6.33	315.23	0.79	30	1.5	70	85	1	90	15.708	0	5100	15700.00	57.39	7.00	30.00	364.29	1.36
81_ELU_SIS_Z_Max	5.83	309.02	0.79	30	1.5	70	85	1	90	15.708	0	5100	15700.00	56.68	7.00	30.00	364.29	1.42
82_ELU_SIS_Z_Max	6.56	316.21	0.79	30	1.5	70	85	1	90	15.708	0	5100	15700.00	57.50	7.00	30.00	364.29	1.33
83_ELU_SIS_Z_Max	6.25	310.67	0.79	30	1.5	70	85	1	90	15.708	0	5100	15700.00	56.87	7.00	30.00	364.29	1.36
88_ELU_SIS_Z_Max	6.42	217.74	0.79	30	1.5	70	85	1	90	15.708	0	5100	15700.00	46.31	7.00	30.00	364.29	1.29
89_ELU_SIS_Z_Max	5.92	211.03	0.79	30	1.5	70	85	1	90	15.708	0	5100	15700.00	45.55	7.00	30.00	364.29	1.34
90_ELU_SIS_Z_Max	6.65	218.73	0.79	30	1.5	70	85	1	90	15.708	0	5100	15700.00	46.42	7.00	30.00	364.29	1.26
91_ELU_SIS_Z_Max	6.34	212.70	0.79	30	1.5	70	85	1	90	15.708	0	5100	15700.00	45.74	7.00	30.00	364.29	1.29
80_ELU_SIS_Z_Min	14.86	235.14	0.79	30	1.5	70	85	1	90	15.708	0	5100	15700.00	48.29	7.00	30.00	364.29	0.89
81_ELU_SIS_Z_Min	15.06	181.16	0.79	30	1.5	70	85	1	90	15.708	0	5100	15700.00	42.15	7.00	30.00	364.29	0.87
82_ELU_SIS_Z_Min	14.76	235.27	0.79	30	1.5	70	85	1	90	15.708	0	5100	15700.00	48.30	7.00	30.00	364.29	0.89
83_ELU_SIS_Z_Min	14.89	181.76	0.79	30	1.5	70	85	1	90	15.708	0	5100	15700.00	42.22	7.00	30.00	364.29	0.87
88_ELU_SIS_Z_Min	14.90	132.75	0.79	30	1.5	70	85	1	90	15.708	0	5100	15700.00	36.65	7.00	30.00	364.29	0.86
89_ELU_SIS_Z_Min	15.10	79.14	0.79	30	1.5	70	85	1	90	15.708	0	5100	15700.00	30.56	7.00	30.00	364.29	0.83
90_ELU_SIS_Z_Min	14.80	132.88	0.79	30	1.5	70	85	1	90	15.708	0	5100	15700.00	36.67	7.00	30.00	364.29	0.86
91_ELU_SIS_Z_Min	14.93	79.72	0.79	30	1.5	70	85	1	90	15.708	0	5100	15700.00	30.63	7.00	30.00	364.29	0.84

ARMADO DE ENCEPADO DE ESTRIBOS

AXILES EN PILOTES

Axil máximo en pilotes en ELU Persistente	4469.62	**kN**
Axil máximo en pilotes en ELU Sismo	3688.68	**kN**

GEOMETRIA ENCEPADO

Nº de pilotes	8.00	
Diámetro de pilotes	1.00	**m**
Dimension longitudinal encepado	6.00	**m**
Dimension transversal encepado	10.60	**m**
Canto encepado	1.40	**m**
Diámetro de los fustes del estribo	1.20	**m**
Vuelo longitudinal respecto de fuste	2.00	**m**
Vuelo transversal respecto de fuste	0.00	**m**

ARMADURA PRINCIPAL DE CARA INFERIOR DE ENCEPADO (LONGITUDINAL)

	Longitudinal
Recorrido horizontal biela (m)	1.70
Recorrido vertical (m)	1.11
Td (kN)	6876.34
As,nec (cm2)	171.91
Nº de barras del 32	22

ARMADURA SECUNDARIA ENCEPADO (LONGITUDINAL)

	Longitudinal
Cuantía total a disponer (cm2)	171.91
Anchura total de reparto (m)	6.60
Cuantía a disponer (cm2/ml)	26.05

ARMADURA TRANSVERSAL DEL ENCEPADO

Se dispondrá cuantía mínima mecánica

As	25.2 cm2 -> fi25 a 20

Empresa:	ACL ESTRUCTURAS	Proyecto:	AUTOVIA ALMANZORA. TRAMO: CUCADOR-ENLACE AL-7106
Dirección:		Código:	ESTRUCTURA E1
Teléfono/Fax:		Autor:	
Sitio web:		Fecha:	07/06/2017

FUSTE_ESTRIBO

1.- Norma

Instrucción de Hormigón Estructural (EHE-08)

2.- Detalle

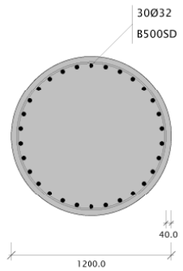

Hormigón: HA-30

Hormigón: 11309.73 cm²
Armaduras: 24127.43 mm²
Cuantía: 21.33 ‰

3.- Materiales

3.1.- Hormigón

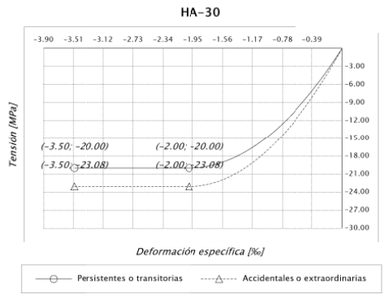

Designación: HA-30
f_{ck}: 30.00 MPa
α_{cc}: 1.000 (Persistentes o transitorias)
α_{cc}: 1.000 (Accidentales o extraordinarias)
γ_c: 1.500 (Persistentes o transitorias)
γ_c: 1.300 (Accidentales o extraordinarias)
f_{cd}: 20.00 MPa (Persistentes o transitorias)
f_{cd}: 23.08 MPa (Accidentales o extraordinarias)
ϵ_{c0}: 2.00 ‰
ϵ_{cu}: 3.50 ‰
n: 2.000 (exponente)

3.2.- Armadura

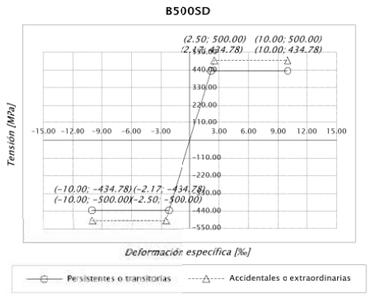

Designación: B500SD
f_{yk}: 500.00 MPa
γ_s: 1.150 (Persistentes o transitorias)
γ_s: 1.000 (Accidentales o extraordinarias)
f_{yd}: 434.78 MPa (Persistentes o transitorias)
f_{yd}: 500.00 MPa (Accidentales o extraordinarias)
$\epsilon_{máx}$: 10.00 ‰
E_s: 200000.0 MPa

4.- Esfuerzos internos aplicados

Combinación	N_d [kN]	Myy_d [kN·m]	Mzz_d [kN·m]	Accidental
10_ELU_01_Max	-1684.17	-98.45	2851.04	No
11_ELU_01_Max	-1031.14	17.96	2853.97	No
12_ELU_01_Max	-1361.38	-236.92	-1469.78	No
13_ELU_01_Max	-1794.65	-147.26	-1467.52	No
14_ELU_01_Max	-1684.12	-97.33	-1474.58	No
15_ELU_01_Max	-1030.94	19.67	-1484.39	No
8_ELU_01_Max	-1361.61	-236.37	2841.84	No
9_ELU_01_Max	-1794.32	-144.49	2839.16	No
10_ELU_01_Min	-2386.36	-133.62	1474.60	No
11_ELU_01_Min	-1463.19	-32.38	1484.39	No
12_ELU_01_Min	-2146.66	-331.05	-2841.85	No
13_ELU_01_Min	-2909.45	-178.34	-2839.18	No
14_ELU_01_Min	-2386.58	-132.63	-2851.01	No
15_ELU_01_Min	-1462.80	-30.41	-2853.96	No
8_ELU_01_Min	-2147.45	-331.17	1469.77	No
9_ELU_01_Min	-2908.31	-175.93	1467.51	No
10_ELU_02_Max	-1206.70	-103.19	2863.86	No
11_ELU_02_Max	-692.15	-10.73	2863.94	No
12_ELU_02_Max	-1022.44	-207.93	-1479.75	No
13_ELU_02_Max	-1317.12	-142.11	-1480.34	No
14_ELU_02_Max	-1206.60	-102.48	-1487.40	No

Combinación	N_d [kN]	Myy_d [kN·m]	Mzz_d [kN·m]	Accidental
15_ELU_02_Max	-692.00	-9.33	-1494.37	No
8_ELU_02_Max	-1022.62	-207.68	2851.82	No
9_ELU_02_Max	-1316.85	-139.76	2851.98	No
10_ELU_02_Min	-1908.89	-138.36	1487.42	No
11_ELU_02_Min	-1124.19	-61.07	1494.37	No
12_ELU_02_Min	-1807.72	-302.05	-2851.83	No
13_ELU_02_Min	-2431.93	-173.19	-2852.00	No
14_ELU_02_Min	-1909.05	-137.78	-2863.83	No
15_ELU_02_Min	-1123.87	-59.40	-2863.93	No
8_ELU_02_Min	-1808.46	-302.48	1479.74	No
9_ELU_02_Min	-2430.84	-171.19	1480.33	No
10_ELU_SIS_X_Max	-1252.88	328.96	3531.87	No
11_ELU_SIS_X_Max	-715.07	365.91	3538.51	No
12_ELU_SIS_X_Max	-726.01	190.14	933.73	No
13_ELU_SIS_X_Max	-1256.81	300.75	931.24	No
14_ELU_SIS_X_Max	-1252.69	331.75	930.98	No
15_ELU_SIS_X_Max	-715.05	365.12	933.83	No
8_ELU_SIS_X_Max	-726.02	192.63	3538.67	No
9_ELU_SIS_X_Max	-1256.99	300.38	3531.55	No
10_ELU_SIS_X_Min	-1582.25	-299.11	-931.00	No
11_ELU_SIS_X_Min	-1268.18	-193.26	-933.81	No
12_ELU_SIS_X_Min	-1296.91	-368.32	-3538.70	No
13_ELU_SIS_X_Min	-1612.08	-330.23	-3531.52	No
14_ELU_SIS_X_Min	-1582.80	-299.50	-3531.83	No
15_ELU_SIS_X_Min	-1267.82	-190.76	-3538.54	No
8_ELU_SIS_X_Min	-1297.29	-369.14	-933.71	No
9_ELU_SIS_X_Min	-1611.49	-327.43	-931.26	No
10_ELU_SIS_Y_Max	-1102.30	1056.70	1997.92	No
11_ELU_SIS_Y_Max	-210.78	1001.90	2047.26	No
12_ELU_SIS_Y_Max	-222.05	822.42	-557.54	No
13_ELU_SIS_Y_Max	-1105.50	1032.12	-602.72	No
14_ELU_SIS_Y_Max	-1101.38	1063.12	-602.97	No
15_ELU_SIS_Y_Max	-211.10	997.40	-557.44	No
8_ELU_SIS_Y_Max	-221.73	828.63	2047.42	No

Combinación	N_d [kN]	Myy_d [kN·m]	Mzz_d [kN·m]	Accidental
9_ELU_SIS_Y_Max	-1106.41	1028.13	1997.60	No
10_ELU_SIS_Y_Min	-1732.84	-1026.86	602.95	No
11_ELU_SIS_Y_Min	-1772.47	-829.26	557.44	No
12_ELU_SIS_Y_Min	-1800.86	-1000.60	-2047.43	No
13_ELU_SIS_Y_Min	-1763.39	-1061.60	-1997.56	No
14_ELU_SIS_Y_Min	-1734.11	-1030.87	-1997.88	No
15_ELU_SIS_Y_Min	-1771.77	-823.04	-2047.28	No
8_ELU_SIS_Y_Min	-1801.57	-1005.13	557.54	No
9_ELU_SIS_Y_Min	-1762.07	-1055.18	602.69	No
10_ELU_SIS_Z_Max	-1127.31	330.22	1992.94	No
11_ELU_SIS_Z_Max	-644.10	376.22	2006.44	No
12_ELU_SIS_Z_Max	-655.10	200.38	-598.34	No
13_ELU_SIS_Z_Max	-1131.15	302.08	-607.67	No
14_ELU_SIS_Z_Max	-1127.03	333.08	-607.93	No
15_ELU_SIS_Z_Max	-644.15	375.36	-598.25	No
8_ELU_SIS_Z_Max	-655.05	202.95	2006.60	No
9_ELU_SIS_Z_Max	-1131.42	301.65	1992.62	No
10_ELU_SIS_Z_Min	-1707.82	-300.38	607.92	No
11_ELU_SIS_Z_Min	-1339.15	-203.58	598.26	No
12_ELU_SIS_Z_Min	-1367.81	-378.56	-2006.63	No
13_ELU_SIS_Z_Min	-1737.74	-331.56	-1992.61	No
14_ELU_SIS_Z_Min	-1708.47	-300.83	-1992.93	No
15_ELU_SIS_Z_Min	-1338.72	-201.01	2006.47	No
8_ELU_SIS_Z_Min	-1368.26	-379.45	598.36	No
9_ELU_SIS_Z_Min	-1737.06	-328.70	607.66	No
10_ELU_01_Max	-1424.61	134.59	664.67	No
11_ELU_01_Max	-771.59	-30.39	632.66	No
12_ELU_01_Max	-1101.82	443.24	-289.31	No
13_ELU_01_Max	-1535.09	177.43	-304.08	No
14_ELU_01_Max	-1424.57	133.48	-300.71	No
15_ELU_01_Max	-771.38	-32.58	-283.70	No
8_ELU_01_Max	-1102.06	442.34	655.40	No
9_ELU_01_Max	-1534.77	175.03	689.43	No
10_ELU_01_Min	-2126.81	59.69	300.67	No

Combinación	N_d [kN]	Myy_d [kN·m]	Mzz_d [kN·m]	Accidental
11_ELU_01_Min	-1203.63	-118.46	283.73	No
12_ELU_01_Min	-1887.10	287.87	-655.37	No
13_ELU_01_Min	-2649.89	106.74	-689.43	No
14_ELU_01_Min	-2127.02	58.56	-664.73	No
15_ELU_01_Min	-1203.25	-120.71	-632.63	No
8_ELU_01_Min	-1887.90	286.93	289.35	No
9_ELU_01_Min	-2648.75	104.12	304.06	No
10_ELU_02_Max	-1014.43	139.12	647.63	No
11_ELU_02_Max	-499.89	14.57	620.31	No
12_ELU_02_Max	-830.17	397.87	-276.97	No
13_ELU_02_Max	-1124.85	172.50	-287.04	No
14_ELU_02_Max	-1014.33	138.41	-283.67	No
15_ELU_02_Max	-499.73	12.79	-271.35	No
8_ELU_02_Max	-830.35	397.37	643.05	No
9_ELU_02_Max	-1124.59	170.51	672.40	No
10_ELU_02_Min	-1716.63	64.22	283.64	No
11_ELU_02_Min	-931.93	-73.50	271.37	No
12_ELU_02_Min	-1615.45	242.50	-643.02	No
13_ELU_02_Min	-2239.66	101.81	-672.39	No
14_ELU_02_Min	-1716.79	63.49	-647.69	No
15_ELU_02_Min	-931.60	-75.34	-620.28	No
8_ELU_02_Min	-1616.19	241.97	277.00	No
9_ELU_02_Min	-2238.57	99.60	287.03	No
10_ELU_SIS_X_Max	-1061.95	278.90	724.00	No
11_ELU_SIS_X_Max	-524.10	129.20	708.81	No
12_ELU_SIS_X_Max	-535.05	404.07	162.57	No
13_ELU_SIS_X_Max	-1065.88	307.94	146.46	No
14_ELU_SIS_X_Max	-1061.76	279.21	146.66	No
15_ELU_SIS_X_Max	-524.10	126.53	162.72	No
8_ELU_SIS_X_Max	-535.05	404.43	710.01	No
9_ELU_SIS_X_Max	-1066.06	305.26	725.50	No
10_ELU_SIS_X_Min	-1388.66	-308.55	-146.67	No
11_ELU_SIS_X_Min	-1074.61	-399.58	-162.72	No
12_ELU_SIS_X_Min	-1103.33	-125.71	-709.97	No

Combinación	N_d [kN]	Myy_d [kN·m]	Mzz_d [kN·m]	Accidental
13_ELU_SIS_X_Min	-1418.48	-282.19	-725.53	No
14_ELU_SIS_X_Min	-1389.20	-311.24	-724.03	No
15_ELU_SIS_X_Min	-1074.24	-399.22	-708.77	No
8_ELU_SIS_X_Min	-1103.72	-128.38	-162.56	No
9_ELU_SIS_X_Min	-1417.89	-281.91	-146.48	No
10_ELU_SIS_Y_Max	-911.38	951.99	438.43	No
11_ELU_SIS_Y_Max	-20.02	715.79	451.79	No
12_ELU_SIS_Y_Max	-31.29	987.09	-94.46	No
13_ELU_SIS_Y_Max	-914.58	984.39	-139.13	No
14_ELU_SIS_Y_Max	-910.46	955.65	-138.94	No
15_ELU_SIS_Y_Max	-20.34	709.55	-94.30	No
8_ELU_SIS_Y_Max	-30.97	991.01	452.99	No
9_ELU_SIS_Y_Max	-915.49	978.34	439.93	No
10_ELU_SIS_Y_Min	-1539.22	-981.64	138.90	No
11_ELU_SIS_Y_Min	-1578.70	-986.16	94.30	No
12_ELU_SIS_Y_Min	-1607.09	-708.74	-452.95	No
13_ELU_SIS_Y_Min	-1569.77	-958.64	-439.94	No
14_ELU_SIS_Y_Min	-1540.50	-987.69	-438.44	No
15_ELU_SIS_Y_Min	-1578.00	-982.24	-451.74	No
8_ELU_SIS_Y_Min	-1607.81	-714.97	94.46	No
9_ELU_SIS_Y_Min	-1568.46	-954.99	139.09	No
10_ELU_SIS_Z_Max	-939.43	279.48	439.49	No
11_ELU_SIS_Z_Max	-455.96	144.21	428.51	No
12_ELU_SIS_Z_Max	-466.99	419.07	-117.72	No
13_ELU_SIS_Z_Max	-943.27	308.61	-138.06	No
14_ELU_SIS_Z_Max	-939.15	279.87	-137.86	No
15_ELU_SIS_Z_Max	-456.04	141.53	-117.56	No
8_ELU_SIS_Z_Max	-466.91	419.44	429.71	No
9_ELU_SIS_Z_Max	-943.54	305.83	440.99	No
10_ELU_SIS_Z_Min	-1511.17	-309.12	137.84	No
11_ELU_SIS_Z_Min	-1142.75	-414.59	117.58	No
12_ELU_SIS_Z_Min	-1171.39	-140.72	-429.68	No
13_ELU_SIS_Z_Min	-1541.09	-282.86	-441.01	No
14_ELU_SIS_Z_Min	-1511.81	-311.90	-439.52	No

Combinación	N_d [kN]	Myy_d [kN·m]	Mzz_d [kN·m]	Accidental
15_ELU_SIS_Z_Min	-1142.30	-414.22	-428.48	No
8_ELU_SIS_Z_Min	-1171.86	-143.39	117.73	No
9_ELU_SIS_Z_Min	-1540.41	-282.48	138.03	No

5.- Comprobaciones

La sección transversal resiste todas las combinaciones.

Combinación: 11_ELU_SIS_X_Max

5.1.- Comprobación de resistencia a los esfuerzos actuantes

5.1.1) Hormigón

Máxima deformación de compresión: -1.39 ‰

Máxima tensión de compresión: -18.12 MPa

5.1.2) Armadura

Máxima deformación de compresión: -1.17 ‰

Máxima tensión de compresión: -234.89 MPa

Máxima deformación de tracción: 2.27 ‰

Máxima tensión de tracción: 434.78 MPa

5.1.3) Equilibrio

Valor y posición de las resultantes internas

Resultante	Valor [kN]	Y [m]	Z [m]	Vista 3D
Hormigón	-3330.39	0.407	-0.042	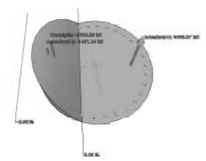
Armadura comprimida	-1451.24	0.455	-0.047	
Armadura traccionada	4066.57	-0.374	0.039	

Empresa:	ACL ESTRUCTURAS	**Proyecto:**	AUTOVIA ALMANZORA. TRAMO: CUCADOR-ENLACE AL-7106
Dirección:		**Código:**	ESTRUCTURA E1
Teléfono/Fax:		**Autor:**	
Sitio web:		**Fecha:**	07/06/2017

5.2.- Comprobación de resistencia para la situación de colapso

Modo de colapsar: Axil y excentricidades Y-Z constantes

N_u: -715.07 kN

Myy_u: 486.11 kN·m

Mzz_u: 4700.93 kN·m

Aprovechamiento: 75.27 %

5.2.1) Hormigón

Máxima deformación de compresión: -3.50 ‰

Máxima tensión de compresión: -20.00 MPa

5.2.2) Armadura

Máxima deformación de compresión: -2.84 ‰

Máxima tensión de compresión: -434.78 MPa

Máxima deformación de tracción: 7.81 ‰

Máxima tensión de tracción: 434.78 MPa

5.2.3) Equilibrio

Valor y posición de las resultantes internas

Resultante	Valor *[kN]*	Y *[m]*	Z *[m]*	Vista 3D
Hormigón	-4105.76	0.422	-0.044	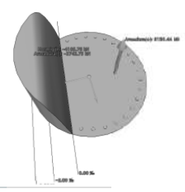
Armadura comprimida	-2742.75	0.465	-0.048	
Armadura traccionada	6133.44	-0.276	0.029	

CÁLCULO A CORTANTE SEGÚN EHE

FECHA:	07/06/2017
OBRA:	AUTOVÍA ALMANZORA
ESTRUCTURA:	E1

CÁLCULO ARMADURA DE CORTANTE EN FUSTES DE ESTRIBO

REF.	DATOS													RESULTADOS				
	Vrd (ton)	Nd (ton)	Ac (m2)	fck (Mpa)	γc	bo (cm)	d (cm)	cotg(θ)	alpha (º)	As (cm2)	Ap (cm2)	fyk (kp/cm2)	fpk (kp/cm2)	Vrd sin cercos (ton)	As,nec (cm2/ml)	Sep.max (cm)	Vu1 (ton)	Decalaje (m)
10_ELU_01_Max	33.17	171.68	1.13	30	1.5	100	105	1	90	60	0	5100	15700.00	71.53	10.00	30.00	642.86	1.02
11_ELU_01_Max	33.56	105.11	1.13	30	1.5	100	105	1	90	60	0	5100	15700.00	62.26	10.00	30.00	642.86	1.00
12_ELU_01_Max	18.95	138.77	1.13	30	1.5	100	105	1	90	60	0	5100	15700.00	66.95	10.00	30.00	642.86	1.24
13_ELU_01_Max	17.15	182.94	1.13	30	1.5	100	105	1	90	60	0	5100	15700.00	73.10	10.00	30.00	642.86	1.31
14_ELU_01_Max	17.39	171.67	1.13	30	1.5	100	105	1	90	60	0	5100	15700.00	71.53	10.00	30.00	642.86	1.30
15_ELU_01_Max	17.84	105.09	1.13	30	1.5	100	105	1	90	60	0	5100	15700.00	62.26	10.00	30.00	642.86	1.26
8_ELU_01_Max	34.08	138.80	1.13	30	1.5	100	105	1	90	60	0	5100	15700.00	66.95	10.00	30.00	642.86	1.01
9_ELU_01_Max	33.15	182.91	1.13	30	1.5	100	105	1	90	60	0	5100	15700.00	73.09	10.00	30.00	642.86	1.02
10_ELU_01_Min	17.69	243.26	1.13	30	1.5	100	105	1	90	60	0	5100	15700.00	81.50	10.00	30.00	642.86	1.31
11_ELU_01_Min	17.72	149.15	1.13	30	1.5	100	105	1	90	60	0	5100	15700.00	68.39	10.00	30.00	642.86	1.28
12_ELU_01_Min	35.14	218.82	1.13	30	1.5	100	105	1	90	60	0	5100	15700.00	78.09	10.00	30.00	642.86	1.01
13_ELU_01_Min	33.37	296.58	1.13	30	1.5	100	105	1	90	60	0	5100	15700.00	88.92	10.00	30.00	642.86	1.04
14_ELU_01_Min	33.33	243.28	1.13	30	1.5	100	105	1	90	60	0	5100	15700.00	81.50	10.00	30.00	642.86	1.03
15_ELU_01_Min	33.50	149.11	1.13	30	1.5	100	105	1	90	60	0	5100	15700.00	68.39	10.00	30.00	642.86	1.01
8_ELU_01_Min	20.77	218.90	1.13	30	1.5	100	105	1	90	60	0	5100	15700.00	78.10	10.00	30.00	642.86	1.22
9_ELU_01_Min	17.53	296.46	1.13	30	1.5	100	105	1	90	60	0	5100	15700.00	88.91	10.00	30.00	642.86	1.33
10_ELU_02_Max	33.63	123.01	1.13	30	1.5	100	105	1	90	60	0	5100	15700.00	64.75	10.00	30.00	642.86	1.01
11_ELU_02_Max	33.85	70.56	1.13	30	1.5	100	105	1	90	60	0	5100	15700.00	57.45	10.00	30.00	642.86	1.00
12_ELU_02_Max	18.83	104.22	1.13	30	1.5	100	105	1	90	60	0	5100	15700.00	62.13	10.00	30.00	642.86	1.23
13_ELU_02_Max	17.55	134.26	1.13	30	1.5	100	105	1	90	60	0	5100	15700.00	66.32	10.00	30.00	642.86	1.28
14_ELU_02_Max	17.85	123.00	1.13	30	1.5	100	105	1	90	60	0	5100	15700.00	64.75	10.00	30.00	642.86	1.27
15_ELU_02_Max	18.08	70.54	1.13	30	1.5	100	105	1	90	60	0	5100	15700.00	57.44	10.00	30.00	642.86	1.25
8_ELU_02_Max	34.17	104.24	1.13	30	1.5	100	105	1	90	60	0	5100	15700.00	62.14	10.00	30.00	642.86	1.00
9_ELU_02_Max	33.58	134.24	1.13	30	1.5	100	105	1	90	60	0	5100	15700.00	66.31	10.00	30.00	642.86	1.01
10_ELU_02_Min	18.16	194.59	1.13	30	1.5	100	105	1	90	60	0	5100	15700.00	74.72	10.00	30.00	642.86	1.28
11_ELU_02_Min	18.09	114.60	1.13	30	1.5	100	105	1	90	60	0	5100	15700.00	63.58	10.00	30.00	642.86	1.26
12_ELU_02_Min	35.10	184.27	1.13	30	1.5	100	105	1	90	60	0	5100	15700.00	73.28	10.00	30.00	642.86	1.00
13_ELU_02_Min	33.78	247.90	1.13	30	1.5	100	105	1	90	60	0	5100	15700.00	82.14	10.00	30.00	642.86	1.03
14_ELU_02_Min	33.79	194.60	1.13	30	1.5	100	105	1	90	60	0	5100	15700.00	74.72	10.00	30.00	642.86	1.02

CÁLCULO A CORTANTE SEGÚN EHE

FECHA:	07/06/2017
OBRA:	AUTOVÍA ALMANZORA
ESTRUCTURA:	E1

CÁLCULO ARMADURA DE CORTANTE EN FUSTES DE ESTRIBO

REF.	DATOS													RESULTADOS				
	Vrd (ton)	Nd (ton)	Ac (m2)	fck (Mpa)	γc	bo (cm)	d (cm)	cotg(θ)	alpha (º)	As (cm2)	Ap (cm2)	fyk (kp/cm2)	fpk (kp/cm2)	Vrd sin cercos (ton)	As,nec (cm2/ml)	Sep.max (cm)	Vu1 (ton)	Decalaje (m)
15_ELU_02_Min	33.85	114.56	1.13	30	1.5	100	105	1	90	60	0	5100	15700.00	63.57	10.00	30.00	642.86	1.00
8_ELU_02_Min	20.46	184.35	1.13	30	1.5	100	105	1	90	60	0	5100	15700.00	73.29	10.00	30.00	642.86	1.21
9_ELU_02_Min	17.91	247.79	1.13	30	1.5	100	105	1	90	60	0	5100	15700.00	82.13	10.00	30.00	642.86	1.30
10_ELU_SIS_X_Max	44.81	127.71	1.13	30	1.5	100	105	1	90	60	0	5100	15700.00	65.41	10.00	30.00	642.86	0.93
11_ELU_SIS_X_Max	45.91	72.89	1.13	30	1.5	100	105	1	90	60	0	5100	15700.00	57.77	10.00	30.00	642.86	0.92
12_ELU_SIS_X_Max	14.44	74.01	1.13	30	1.5	100	105	1	90	60	0	5100	15700.00	57.93	10.00	30.00	642.86	1.38
13_ELU_SIS_X_Max	16.21	128.12	1.13	30	1.5	100	105	1	90	60	0	5100	15700.00	65.46	10.00	30.00	642.86	1.33
14_ELU_SIS_X_Max	16.71	127.70	1.13	30	1.5	100	105	1	90	60	0	5100	15700.00	65.40	10.00	30.00	642.86	1.31
15_ELU_SIS_X_Max	17.95	72.89	1.13	30	1.5	100	105	1	90	60	0	5100	15700.00	57.77	10.00	30.00	642.86	1.25
8_ELU_SIS_X_Max	44.65	74.01	1.13	30	1.5	100	105	1	90	60	0	5100	15700.00	57.93	10.00	30.00	642.86	0.93
9_ELU_SIS_X_Max	44.64	128.13	1.13	30	1.5	100	105	1	90	60	0	5100	15700.00	65.46	10.00	30.00	642.86	0.93
10_ELU_SIS_X_Min	16.14	161.29	1.13	30	1.5	100	105	1	90	60	0	5100	15700.00	70.08	10.00	30.00	642.86	1.34
11_ELU_SIS_X_Min	14.46	129.27	1.13	30	1.5	100	105	1	90	60	0	5100	15700.00	65.62	10.00	30.00	642.86	1.40
12_ELU_SIS_X_Min	45.94	132.20	1.13	30	1.5	100	105	1	90	60	0	5100	15700.00	66.03	10.00	30.00	642.86	0.93
13_ELU_SIS_X_Min	44.81	164.33	1.13	30	1.5	100	105	1	90	60	0	5100	15700.00	70.50	10.00	30.00	642.86	0.94
14_ELU_SIS_X_Min	44.63	161.35	1.13	30	1.5	100	105	1	90	60	0	5100	15700.00	70.09	10.00	30.00	642.86	0.94
15_ELU_SIS_X_Min	44.65	129.24	1.13	30	1.5	100	105	1	90	60	0	5100	15700.00	65.62	10.00	30.00	642.86	0.93
8_ELU_SIS_X_Min	18.06	132.24	1.13	30	1.5	100	105	1	90	60	0	5100	15700.00	66.04	10.00	30.00	642.86	1.27
9_ELU_SIS_X_Min	16.64	164.27	1.13	30	1.5	100	105	1	90	60	0	5100	15700.00	70.50	10.00	30.00	642.86	1.32
10_ELU_SIS_Y_Max	40.20	112.36	1.13	30	1.5	100	105	1	90	60	0	5100	15700.00	63.27	10.00	30.00	642.86	0.96
11_ELU_SIS_Y_Max	40.61	21.49	1.13	30	1.5	100	105	1	90	60	0	5100	15700.00	50.61	10.00	30.00	642.86	0.94
12_ELU_SIS_Y_Max	24.67	22.64	1.13	30	1.5	100	105	1	90	60	0	5100	15700.00	50.77	10.00	30.00	642.86	1.09
13_ELU_SIS_Y_Max	31.69	112.69	1.13	30	1.5	100	105	1	90	60	0	5100	15700.00	63.31	10.00	30.00	642.86	1.02
14_ELU_SIS_Y_Max	32.58	112.27	1.13	30	1.5	100	105	1	90	60	0	5100	15700.00	63.26	10.00	30.00	642.86	1.01
15_ELU_SIS_Y_Max	31.30	21.52	1.13	30	1.5	100	105	1	90	60	0	5100	15700.00	50.62	10.00	30.00	642.86	1.01
8_ELU_SIS_Y_Max	35.77	22.60	1.13	30	1.5	100	105	1	90	60	0	5100	15700.00	50.77	10.00	30.00	642.86	0.97
9_ELU_SIS_Y_Max	39.54	112.78	1.13	30	1.5	100	105	1	90	60	0	5100	15700.00	63.33	10.00	30.00	642.86	0.96
10_ELU_SIS_Y_Min	31.52	176.64	1.13	30	1.5	100	105	1	90	60	0	5100	15700.00	72.22	10.00	30.00	642.86	1.04
11_ELU_SIS_Y_Min	24.88	180.68	1.13	30	1.5	100	105	1	90	60	0	5100	15700.00	72.78	10.00	30.00	642.86	1.12

CÁLCULO A CORTANTE SEGÚN EHE

FECHA:	07/06/2017
OBRA:	AUTOVÍA ALMANZORA
ESTRUCTURA:	E1

CÁLCULO ARMADURA DE CORTANTE EN FUSTES DE ESTRIBO

REF.	DATOS													RESULTADOS				
	Vrd (ton)	Nd (ton)	Ac (m2)	fck (Mpa)	γc	bo (cm)	d (cm)	cotg(θ)	alpha (º)	As (cm2)	Ap (cm2)	fyk (kp/cm2)	fpk (kp/cm2)	Vrd sin cercos (ton)	As,nec (cm2/ml)	Sep.max (cm)	Vu1 (ton)	Decalaje (m)
12_ELU_SIS_Y_Min	40.60	183.57	1.13	30	1.5	100	105	1	90	60	0	5100	15700.00	73.18	10.00	30.00	642.86	0.96
13_ELU_SIS_Y_Min	40.29	179.75	1.13	30	1.5	100	105	1	90	60	0	5100	15700.00	72.65	10.00	30.00	642.86	0.97
14_ELU_SIS_Y_Min	39.58	176.77	1.13	30	1.5	100	105	1	90	60	0	5100	15700.00	72.24	10.00	30.00	642.86	0.97
15_ELU_SIS_Y_Min	35.66	180.61	1.13	30	1.5	100	105	1	90	60	0	5100	15700.00	72.77	10.00	30.00	642.86	1.00
8_ELU_SIS_Y_Min	31.54	183.65	1.13	30	1.5	100	105	1	90	60	0	5100	15700.00	73.19	10.00	30.00	642.86	1.04
9_ELU_SIS_Y_Min	32.32	179.62	1.13	30	1.5	100	105	1	90	60	0	5100	15700.00	72.63	10.00	30.00	642.86	1.03
10_ELU_SIS_Z_Max	26.45	114.91	1.13	30	1.5	100	105	1	90	60	0	5100	15700.00	63.62	10.00	30.00	642.86	1.09
11_ELU_SIS_Z_Max	28.01	65.66	1.13	30	1.5	100	105	1	90	60	0	5100	15700.00	56.76	10.00	30.00	642.86	1.06
12_ELU_SIS_Z_Max	7.95	66.78	1.13	30	1.5	100	105	1	90	60	0	5100	15700.00	56.92	10.00	30.00	642.86	1.93
13_ELU_SIS_Z_Max	10.85	115.31	1.13	30	1.5	100	105	1	90	60	0	5100	15700.00	63.68	10.00	30.00	642.86	1.63
14_ELU_SIS_Z_Max	11.63	114.89	1.13	30	1.5	100	105	1	90	60	0	5100	15700.00	63.62	10.00	30.00	642.86	1.56
15_ELU_SIS_Z_Max	13.54	65.66	1.13	30	1.5	100	105	1	90	60	0	5100	15700.00	56.76	10.00	30.00	642.86	1.42
8_ELU_SIS_Z_Max	25.78	66.77	1.13	30	1.5	100	105	1	90	60	0	5100	15700.00	56.92	10.00	30.00	642.86	1.09
9_ELU_SIS_Z_Max	26.14	115.33	1.13	30	1.5	100	105	1	90	60	0	5100	15700.00	63.68	10.00	30.00	642.86	1.09
10_ELU_SIS_Z_Min	10.80	174.09	1.13	30	1.5	100	105	1	90	60	0	5100	15700.00	71.86	10.00	30.00	642.86	1.66
11_ELU_SIS_Z_Min	8.03	136.51	1.13	30	1.5	100	105	1	90	60	0	5100	15700.00	66.63	10.00	30.00	642.86	1.96
12_ELU_SIS_Z_Min	28.05	139.43	1.13	30	1.5	100	105	1	90	60	0	5100	15700.00	67.04	10.00	30.00	642.86	1.07
13_ELU_SIS_Z_Min	26.45	177.14	1.13	30	1.5	100	105	1	90	60	0	5100	15700.00	72.29	10.00	30.00	642.86	1.10
14_ELU_SIS_Z_Min	26.13	174.16	1.13	30	1.5	100	105	1	90	60	0	5100	15700.00	71.87	10.00	30.00	642.86	1.10
15_ELU_SIS_Z_Min	25.77	136.46	1.13	30	1.5	100	105	1	90	60	0	5100	15700.00	66.62	10.00	30.00	642.86	1.10
8_ELU_SIS_Z_Min	13.66	139.48	1.13	30	1.5	100	105	1	90	60	0	5100	15700.00	67.04	10.00	30.00	642.86	1.45
9_ELU_SIS_Z_Min	11.49	177.07	1.13	30	1.5	100	105	1	90	60	0	5100	15700.00	72.28	10.00	30.00	642.86	1.61
10_ELU_01_Max	33.17	145.22	1.13	30	1.5	100	105	1	90	60	0	5100	15700.00	67.84	10.00	30.00	642.86	1.01
11_ELU_01_Max	33.56	78.65	1.13	30	1.5	100	105	1	90	60	0	5100	15700.00	58.57	10.00	30.00	642.86	1.00
12_ELU_01_Max	18.95	112.32	1.13	30	1.5	100	105	1	90	60	0	5100	15700.00	63.26	10.00	30.00	642.86	1.23
13_ELU_01_Max	17.15	156.48	1.13	30	1.5	100	105	1	90	60	0	5100	15700.00	69.41	10.00	30.00	642.86	1.30
14_ELU_01_Max	17.39	145.22	1.13	30	1.5	100	105	1	90	60	0	5100	15700.00	67.84	10.00	30.00	642.86	1.29
15_ELU_01_Max	17.84	78.63	1.13	30	1.5	100	105	1	90	60	0	5100	15700.00	58.57	10.00	30.00	642.86	1.26
8_ELU_01_Max	34.08	112.34	1.13	30	1.5	100	105	1	90	60	0	5100	15700.00	63.26	10.00	30.00	642.86	1.00

CÁLCULO A CORTANTE SEGÚN EHE

FECHA:	07/06/2017
OBRA:	AUTOVÍA ALMANZORA
ESTRUCTURA:	E1

CÁLCULO ARMADURA DE CORTANTE EN FUSTES DE ESTRIBO

REF.	DATOS													RESULTADOS				
	Vrd (ton)	Nd (ton)	Ac (m2)	fck (Mpa)	γc	bo (cm)	d (cm)	cotg(θ)	alpha (º)	As (cm2)	Ap (cm2)	fyk (kp/cm2)	fpk (kp/cm2)	Vrd sin cercos (ton)	As,nec (cm2/ml)	Sep.max (cm)	Vu1 (ton)	Decalaje (m)
9_ELU_01_Max	33.15	156.45	1.13	30	1.5	100	105	1	90	60	0	5100	15700.00	69.41	10.00	30.00	642.86	1.02
10_ELU_01_Min	17.69	216.80	1.13	30	1.5	100	105	1	90	60	0	5100	15700.00	77.81	10.00	30.00	642.86	1.30
11_ELU_01_Min	17.72	122.69	1.13	30	1.5	100	105	1	90	60	0	5100	15700.00	64.71	10.00	30.00	642.86	1.27
12_ELU_01_Min	35.14	192.36	1.13	30	1.5	100	105	1	90	60	0	5100	15700.00	74.41	10.00	30.00	642.86	1.00
13_ELU_01_Min	33.37	270.12	1.13	30	1.5	100	105	1	90	60	0	5100	15700.00	85.24	10.00	30.00	642.86	1.03
14_ELU_01_Min	33.33	216.82	1.13	30	1.5	100	105	1	90	60	0	5100	15700.00	77.81	10.00	30.00	642.86	1.02
15_ELU_01_Min	33.50	122.66	1.13	30	1.5	100	105	1	90	60	0	5100	15700.00	64.70	10.00	30.00	642.86	1.01
8_ELU_01_Min	20.77	192.45	1.13	30	1.5	100	105	1	90	60	0	5100	15700.00	74.42	10.00	30.00	642.86	1.21
9_ELU_01_Min	17.53	270.01	1.13	30	1.5	100	105	1	90	60	0	5100	15700.00	85.22	10.00	30.00	642.86	1.32
10_ELU_02_Max	33.63	103.41	1.13	30	1.5	100	105	1	90	60	0	5100	15700.00	62.02	10.00	30.00	642.86	1.00
11_ELU_02_Max	33.85	50.96	1.13	30	1.5	100	105	1	90	60	0	5100	15700.00	54.72	10.00	30.00	642.86	0.99
12_ELU_02_Max	18.83	84.63	1.13	30	1.5	100	105	1	90	60	0	5100	15700.00	59.41	10.00	30.00	642.86	1.23
13_ELU_02_Max	17.55	114.66	1.13	30	1.5	100	105	1	90	60	0	5100	15700.00	63.59	10.00	30.00	642.86	1.28
14_ELU_02_Max	17.85	103.40	1.13	30	1.5	100	105	1	90	60	0	5100	15700.00	62.02	10.00	30.00	642.86	1.26
15_ELU_02_Max	18.08	50.94	1.13	30	1.5	100	105	1	90	60	0	5100	15700.00	54.71	10.00	30.00	642.86	1.24
8_ELU_02_Max	34.17	84.64	1.13	30	1.5	100	105	1	90	60	0	5100	15700.00	59.41	10.00	30.00	642.86	1.00
9_ELU_02_Max	33.58	114.64	1.13	30	1.5	100	105	1	90	60	0	5100	15700.00	63.58	10.00	30.00	642.86	1.01
10_ELU_02_Min	18.16	174.99	1.13	30	1.5	100	105	1	90	60	0	5100	15700.00	71.99	10.00	30.00	642.86	1.28
11_ELU_02_Min	18.09	95.00	1.13	30	1.5	100	105	1	90	60	0	5100	15700.00	60.85	10.00	30.00	642.86	1.25
12_ELU_02_Min	35.10	164.67	1.13	30	1.5	100	105	1	90	60	0	5100	15700.00	70.55	10.00	30.00	642.86	1.00
13_ELU_02_Min	33.78	228.30	1.13	30	1.5	100	105	1	90	60	0	5100	15700.00	79.41	10.00	30.00	642.86	1.02
14_ELU_02_Min	33.79	175.00	1.13	30	1.5	100	105	1	90	60	0	5100	15700.00	71.99	10.00	30.00	642.86	1.01
15_ELU_02_Min	33.85	94.96	1.13	30	1.5	100	105	1	90	60	0	5100	15700.00	60.84	10.00	30.00	642.86	1.00
8_ELU_02_Min	20.46	164.75	1.13	30	1.5	100	105	1	90	60	0	5100	15700.00	70.56	10.00	30.00	642.86	1.21
9_ELU_02_Min	17.91	228.19	1.13	30	1.5	100	105	1	90	60	0	5100	15700.00	79.40	10.00	30.00	642.86	1.30
10_ELU_SIS_X_Max	42.73	108.25	1.13	30	1.5	100	105	1	90	60	0	5100	15700.00	62.70	10.00	30.00	642.86	0.94
11_ELU_SIS_X_Max	43.70	53.43	1.13	30	1.5	100	105	1	90	60	0	5100	15700.00	55.06	10.00	30.00	642.86	0.93
12_ELU_SIS_X_Max	12.23	54.54	1.13	30	1.5	100	105	1	90	60	0	5100	15700.00	55.22	10.00	30.00	642.86	1.50
13_ELU_SIS_X_Max	14.16	108.65	1.13	30	1.5	100	105	1	90	60	0	5100	15700.00	62.75	10.00	30.00	642.86	1.41

CÁLCULO A CORTANTE SEGÚN EHE

FECHA:	07/06/2017
OBRA:	AUTOVÍA ALMANZORA
ESTRUCTURA:	E1

CÁLCULO ARMADURA DE CORTANTE EN FUSTES DE ESTRIBO

REF.	DATOS													RESULTADOS				
	Vrd (ton)	Nd (ton)	Ac (m2)	fck (Mpa)	γc	bo (cm)	d (cm)	cotg(θ)	alpha (º)	As (cm2)	Ap (cm2)	fyk (kp/cm2)	fpk (kp/cm2)	Vrd sin cercos (ton)	As,nec (cm2/ml)	Sep.max (cm)	Vu1 (ton)	Decalaje (m)
14_ELU_SIS_X_Max	14.69	108.23	1.13	30	1.5	100	105	1	90	60	0	5100	15700.00	62.69	10.00	30.00	642.86	1.38
15_ELU_SIS_X_Max	15.92	53.42	1.13	30	1.5	100	105	1	90	60	0	5100	15700.00	55.06	10.00	30.00	642.86	1.31
8_ELU_SIS_X_Max	42.49	54.54	1.13	30	1.5	100	105	1	90	60	0	5100	15700.00	55.22	10.00	30.00	642.86	0.94
9_ELU_SIS_X_Max	42.56	108.67	1.13	30	1.5	100	105	1	90	60	0	5100	15700.00	62.75	10.00	30.00	642.86	0.94
10_ELU_SIS_X_Min	14.09	141.56	1.13	30	1.5	100	105	1	90	60	0	5100	15700.00	67.33	10.00	30.00	642.86	1.43
11_ELU_SIS_X_Min	12.25	109.54	1.13	30	1.5	100	105	1	90	60	0	5100	15700.00	62.88	10.00	30.00	642.86	1.52
12_ELU_SIS_X_Min	43.72	112.47	1.13	30	1.5	100	105	1	90	60	0	5100	15700.00	63.28	10.00	30.00	642.86	0.94
13_ELU_SIS_X_Min	42.73	144.60	1.13	30	1.5	100	105	1	90	60	0	5100	15700.00	67.76	10.00	30.00	642.86	0.95
14_ELU_SIS_X_Min	42.55	141.61	1.13	30	1.5	100	105	1	90	60	0	5100	15700.00	67.34	10.00	30.00	642.86	0.95
15_ELU_SIS_X_Min	42.49	109.50	1.13	30	1.5	100	105	1	90	60	0	5100	15700.00	62.87	10.00	30.00	642.86	0.94
8_ELU_SIS_X_Min	16.02	112.51	1.13	30	1.5	100	105	1	90	60	0	5100	15700.00	63.29	10.00	30.00	642.86	1.33
9_ELU_SIS_X_Min	14.61	144.54	1.13	30	1.5	100	105	1	90	60	0	5100	15700.00	67.75	10.00	30.00	642.86	1.40
10_ELU_SIS_Y_Max	37.70	92.90	1.13	30	1.5	100	105	1	90	60	0	5100	15700.00	60.56	10.00	30.00	642.86	0.97
11_ELU_SIS_Y_Max	38.03	2.04	1.13	30	1.5	100	105	1	90	60	0	5100	15700.00	47.90	10.00	30.00	642.86	0.96
12_ELU_SIS_Y_Max	22.58	3.19	1.13	30	1.5	100	105	1	90	60	0	5100	15700.00	48.06	10.00	30.00	642.86	1.12
13_ELU_SIS_Y_Max	29.32	93.23	1.13	30	1.5	100	105	1	90	60	0	5100	15700.00	60.60	10.00	30.00	642.86	1.04
14_ELU_SIS_Y_Max	30.21	92.81	1.13	30	1.5	100	105	1	90	60	0	5100	15700.00	60.54	10.00	30.00	642.86	1.03
15_ELU_SIS_Y_Max	29.13	2.07	1.13	30	1.5	100	105	1	90	60	0	5100	15700.00	47.91	10.00	30.00	642.86	1.03
8_ELU_SIS_Y_Max	33.29	3.16	1.13	30	1.5	100	105	1	90	60	0	5100	15700.00	48.06	10.00	30.00	642.86	0.99
9_ELU_SIS_Y_Max	37.06	93.32	1.13	30	1.5	100	105	1	90	60	0	5100	15700.00	60.62	10.00	30.00	642.86	0.97
10_ELU_SIS_Y_Min	29.16	156.90	1.13	30	1.5	100	105	1	90	60	0	5100	15700.00	69.47	10.00	30.00	642.86	1.06
11_ELU_SIS_Y_Min	22.78	160.93	1.13	30	1.5	100	105	1	90	60	0	5100	15700.00	70.03	10.00	30.00	642.86	1.16
12_ELU_SIS_Y_Min	38.03	163.82	1.13	30	1.5	100	105	1	90	60	0	5100	15700.00	70.43	10.00	30.00	642.86	0.98
13_ELU_SIS_Y_Min	37.78	160.02	1.13	30	1.5	100	105	1	90	60	0	5100	15700.00	69.90	10.00	30.00	642.86	0.98
14_ELU_SIS_Y_Min	37.09	157.03	1.13	30	1.5	100	105	1	90	60	0	5100	15700.00	69.49	10.00	30.00	642.86	0.98
15_ELU_SIS_Y_Min	33.19	160.86	1.13	30	1.5	100	105	1	90	60	0	5100	15700.00	70.02	10.00	30.00	642.86	1.02
8_ELU_SIS_Y_Min	29.36	163.89	1.13	30	1.5	100	105	1	90	60	0	5100	15700.00	70.44	10.00	30.00	642.86	1.06
9_ELU_SIS_Y_Min	29.95	159.88	1.13	30	1.5	100	105	1	90	60	0	5100	15700.00	69.89	10.00	30.00	642.86	1.05
10_ELU_SIS_Z_Max	25.43	95.76	1.13	30	1.5	100	105	1	90	60	0	5100	15700.00	60.96	10.00	30.00	642.86	1.10

CÁLCULO A CORTANTE SEGÚN EHE

FECHA:	07/06/2017
OBRA:	AUTOVÍA ALMANZORA
ESTRUCTURA:	E1

CÁLCULO ARMADURA DE CORTANTE EN FUSTES DE ESTRIBO

REF.	DATOS											RESULTADOS					
	Vrd (ton)	Nd (ton)	Ac (m2)	fck (Mpa)	γc	bo (cm)	d (cm)	cotg(θ)	alpha (º)	As (cm2)	Ap (cm2)	fyk (kp/cm2)	fpk (kp/cm2)	Vrd sin cercos (ton)	As,nec (cm2/ml)	Sep.max (cm)	Vu1 (ton)	Decalaje (m)
11_ELU_SIS_Z_Max	26.83	46.48	1.13	30	1.5	100	105	1	90	60	0	5100	15700.00	54.09	10.00	30.00	642.86	1.07
12_ELU_SIS_Z_Max	8.14	47.60	1.13	30	1.5	100	105	1	90	60	0	5100	15700.00	54.25	10.00	30.00	642.86	1.89
13_ELU_SIS_Z_Max	10.67	96.15	1.13	30	1.5	100	105	1	90	60	0	5100	15700.00	61.01	10.00	30.00	642.86	1.63
14_ELU_SIS_Z_Max	11.41	95.73	1.13	30	1.5	100	105	1	90	60	0	5100	15700.00	60.95	10.00	30.00	642.86	1.57
15_ELU_SIS_Z_Max	13.26	46.49	1.13	30	1.5	100	105	1	90	60	0	5100	15700.00	54.09	10.00	30.00	642.86	1.43
8_ELU_SIS_Z_Max	24.72	47.60	1.13	30	1.5	100	105	1	90	60	0	5100	15700.00	54.25	10.00	30.00	642.86	1.10
9_ELU_SIS_Z_Max	25.14	96.18	1.13	30	1.5	100	105	1	90	60	0	5100	15700.00	61.01	10.00	30.00	642.86	1.10
10_ELU_SIS_Z_Min	10.63	154.04	1.13	30	1.5	100	105	1	90	60	0	5100	15700.00	69.07	10.00	30.00	642.86	1.67
11_ELU_SIS_Z_Min	8.21	116.49	1.13	30	1.5	100	105	1	90	60	0	5100	15700.00	63.84	10.00	30.00	642.86	1.92
12_ELU_SIS_Z_Min	26.88	119.41	1.13	30	1.5	100	105	1	90	60	0	5100	15700.00	64.25	10.00	30.00	642.86	1.08
13_ELU_SIS_Z_Min	25.43	157.09	1.13	30	1.5	100	105	1	90	60	0	5100	15700.00	69.50	10.00	30.00	642.86	1.11
14_ELU_SIS_Z_Min	25.12	154.11	1.13	30	1.5	100	105	1	90	60	0	5100	15700.00	69.08	10.00	30.00	642.86	1.11
15_ELU_SIS_Z_Min	24.71	116.44	1.13	30	1.5	100	105	1	90	60	0	5100	15700.00	63.84	10.00	30.00	642.86	1.11
8_ELU_SIS_Z_Min	13.37	119.46	1.13	30	1.5	100	105	1	90	60	0	5100	15700.00	64.26	10.00	30.00	642.86	1.46
9_ELU_SIS_Z_Min	11.26	157.02	1.13	30	1.5	100	105	1	90	60	0	5100	15700.00	69.49	10.00	30.00	642.86	1.61

Empresa:	ACL ESTRUCTURAS	Proyecto:	AUTOVIA ALMANZORA. TRAMO: CUCADOR-ENLACE AL-7106
Dirección:		Código:	ESTRUCTURA E1
Teléfono/Fax:		Autor:	
Sitio web:		Fecha:	08/06/2017

CARGADERO_ESTRIBO

1.- Norma

Instrucción de Hormigón Estructural (EHE-08)

2.- Detalle

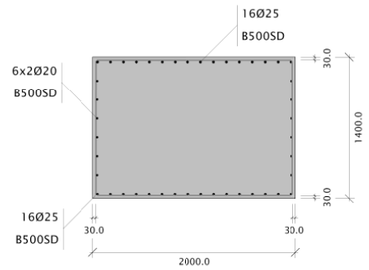

Hormigón: HA-30

Hormigón: 28000.00 cm²
Armadura superior: 7853.98 mm²
Cuantía superior: 2.80 ‰
Armadura inferior: 7853.98 mm²
Cuantía inferior: 2.80 ‰

3.- Materiales

3.1.- Hormigón

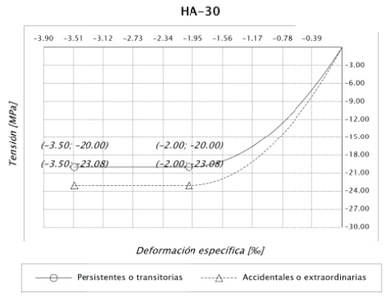

Designación: HA-30
f_{ck}: 30.00 MPa
α_{cc}: 1.000 (Persistentes o transitorias)
α_{cc}: 1.000 (Accidentales o extraordinarias)
γ_c: 1.500 (Persistentes o transitorias)
γ_c: 1.300 (Accidentales o extraordinarias)
f_{cd}: 20.00 MPa (Persistentes o transitorias)
f_{cd}: 23.08 MPa (Accidentales o extraordinarias)
ϵ_{c0}: 2.00 ‰
ϵ_{cu}: 3.50 ‰
n: 2.000 (exponente)

3.2.- Armadura

B500SD

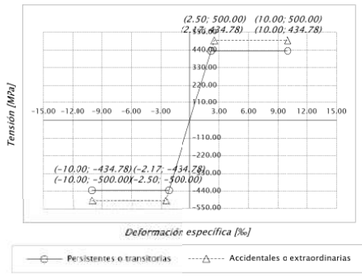

Designación: B500SD
f_{yk}: 500.00 MPa
γ_s: 1.150 (Persistentes o transitorias)
γ_s: 1.000 (Accidentales o extraordinarias)
f_{yd}: 434.78 MPa (Persistentes o transitorias)
f_{yd}: 500.00 MPa (Accidentales o extraordinarias)
$\epsilon_{máx}$: 10.00 ‰
E_s: 200000.0 MPa

4.- Esfuerzos internos aplicados

Combinación	N_d [kN]	Myy_d [kN·m]	Mzz_d [kN·m]	Accidental
0_ELU_01_Max	5.33E-014	-1.62E-012	-2.89E-013	No
0.85_ELU_01_Max	0.23	-135.56	-23.94	No
1.675_ELU_01_Max	0.23	587.97	166.83	No
2.5_ELU_01_Max	-53.28	1380.72	305.05	No
3.075_ELU_01_Max	-53.28	560.60	266.10	No
3.65_ELU_01_Max	-16.99	-101.76	210.22	No
4.35_ELU_01_Max	-16.99	141.51	333.41	No
5.05_ELU_01_Max	-70.53	525.54	405.73	No
5.75_ELU_01_Max	-70.53	121.74	316.87	No
6.45_ELU_01_Max	-23.42	-131.07	214.19	No
7.025_ELU_01_Max	-23.42	921.66	276.03	No
7.6_ELU_01_Max	-77.01	2048.78	297.18	No
8.425_ELU_01_Max	-77.01	749.97	142.80	No
9.25_ELU_01_Max	0.00	-105.32	-23.91	No
0_ELU_01_Min	4.80E-014	-1.62E-012	-6.98E-013	No
0.85_ELU_01_Min	-19.99	-237.77	-40.96	No
1.675_ELU_01_Min	-19.99	303.87	45.86	No
2.5_ELU_01_Min	-73.00	743.16	56.87	No
3.075_ELU_01_Min	-73.00	192.72	48.83	No
3.65_ELU_01_Min	-46.95	-354.82	23.15	No
4.35_ELU_01_Min	-46.95	48.94	75.97	No

Combinación	N_d [kN]	Myy_d [kN·m]	Mzz_d [kN·m]	Accidental
5.05_ELU_01_Min	-100.32	312.16	77.32	No
5.75_ELU_01_Min	-100.32	5.22	62.97	No
6.45_ELU_01_Min	-59.73	-225.83	26.11	No
7.025_ELU_01_Min	-59.73	367.70	57.84	No
7.6_ELU_01_Min	-113.69	931.87	48.82	No
8.425_ELU_01_Min	-113.69	281.04	23.21	No
9.25_ELU_01_Min	0.00	-105.32	-23.91	No
0_ELU_02_Max	3.89E-014	-1.36E-012	-2.88E-013	No
0.85_ELU_02_Max	11.06	-55.71	-22.10	No
1.675_ELU_02_Max	11.06	490.59	171.38	No
2.5_ELU_02_Max	-42.52	1126.30	312.29	No
3.075_ELU_02_Max	-42.52	456.37	272.28	No
3.65_ELU_02_Max	-4.86	-40.55	215.48	No
4.35_ELU_02_Max	-4.86	123.52	340.45	No
5.05_ELU_02_Max	-58.41	442.83	414.56	No
5.75_ELU_02_Max	-58.41	103.74	323.91	No
6.45_ELU_02_Max	-12.65	-75.34	219.31	No
7.025_ELU_02_Max	-12.65	817.43	282.21	No
7.6_ELU_02_Max	-66.18	1794.28	304.44	No
8.425_ELU_02_Max	-66.18	652.59	147.35	No
9.25_ELU_02_Max	0.00	-78.02	-23.91	No
0_ELU_02_Min	3.36E-014	-1.37E-012	-6.97E-013	No
0.85_ELU_02_Min	-9.16	-157.92	-39.12	No
1.675_ELU_02_Min	-9.16	206.49	50.41	No
2.5_ELU_02_Min	-62.23	488.74	64.11	No
3.075_ELU_02_Min	-62.23	88.48	55.01	No
3.65_ELU_02_Min	-34.83	-293.61	28.42	No
4.35_ELU_02_Min	-34.83	30.95	83.02	No
5.05_ELU_02_Min	-88.19	229.44	86.15	No
5.75_ELU_02_Min	-88.19	-12.77	70.02	No
6.45_ELU_02_Min	-48.97	-170.10	31.23	No
7.025_ELU_02_Min	-48.97	263.46	64.02	No
7.6_ELU_02_Min	-102.86	677.38	56.08	No
8.425_ELU_02_Min	-102.86	183.66	27.76	No

Combinación	N_d [kN]	Myy_d [kN·m]	Mzz_d [kN·m]	Accidental
9.25_ELU_02_Min	0.00	-78.02	-23.91	No
0_ELU_SIS_X_Max	11.05	6.31E-013	5.88E-011	No
0.85_ELU_SIS_X_Max	39.75	81.41	37.25	No
1.675_ELU_SIS_X_Max	39.80	449.27	265.90	No
2.5_ELU_SIS_X_Max	0.60	880.00	513.73	No
3.075_ELU_SIS_X_Max	2.82	380.41	452.39	No
3.65_ELU_SIS_X_Max	16.59	68.18	379.30	No
4.35_ELU_SIS_X_Max	15.76	162.34	539.29	No
5.05_ELU_SIS_X_Max	15.75	337.50	687.95	No
5.75_ELU_SIS_X_Max	16.58	166.88	539.30	No
6.45_ELU_SIS_X_Max	2.64	-40.42	384.09	No
7.025_ELU_SIS_X_Max	0.41	402.12	452.38	No
7.6_ELU_SIS_X_Max	39.59	951.88	527.93	No
8.425_ELU_SIS_X_Max	39.54	467.19	265.91	No
9.25_ELU_SIS_X_Max	11.05	-74.40	29.46	No
0_ELU_SIS_X_Min	-11.05	-2.51E-012	-5.15E-011	No
0.85_ELU_SIS_X_Min	-104.90	-553.43	-85.89	No
1.675_ELU_SIS_X_Min	-104.95	129.52	-133.67	No
2.5_ELU_SIS_X_Min	-65.43	634.33	-245.54	No
3.075_ELU_SIS_X_Min	-67.66	232.60	-218.15	No
3.65_ELU_SIS_X_Min	-90.18	-448.08	-208.07	No
4.35_ELU_SIS_X_Min	-89.35	-67.41	-257.22	No
5.05_ELU_SIS_X_Min	-89.35	149.55	-327.47	No
5.75_ELU_SIS_X_Min	-90.18	-64.17	-256.93	No
6.45_ELU_SIS_X_Min	-68.83	-295.42	-205.83	No
7.025_ELU_SIS_X_Min	-66.60	244.74	-218.23	No
7.6_ELU_SIS_X_Min	-106.14	622.23	-259.87	No
8.425_ELU_SIS_X_Min	-106.09	138.01	-133.57	No
9.25_ELU_SIS_X_Min	-11.05	-81.64	-53.35	No
0_ELU_SIS_Y_Max	36.78	1.11E-012	2.46E-011	No
0.85_ELU_SIS_Y_Max	201.81	787.44	55.96	No
1.675_ELU_SIS_Y_Max	201.96	742.85	194.55	No
2.5_ELU_SIS_Y_Max	71.14	975.53	280.28	No
3.075_ELU_SIS_Y_Max	78.55	451.41	247.12	No

Combinación	N_d [kN]	Myy_d [kN·m]	Mzz_d [kN·m]	Accidental
3.65_ELU_SIS_Y_Max	133.12	617.28	217.96	No
4.35_ELU_SIS_Y_Max	130.35	375.63	309.44	No
5.05_ELU_SIS_Y_Max	130.34	448.58	386.82	No
5.75_ELU_SIS_Y_Max	133.12	380.17	309.46	No
6.45_ELU_SIS_Y_Max	78.36	213.34	204.72	No
7.025_ELU_SIS_Y_Max	70.95	473.13	247.12	No
7.6_ELU_SIS_Y_Max	201.75	1116.64	327.66	No
8.425_ELU_SIS_Y_Max	201.59	760.76	194.55	No
9.25_ELU_SIS_Y_Max	36.78	-74.69	4.90	No
0_ELU_SIS_Y_Min	-36.78	-2.98E-012	-1.74E-011	No
0.85_ELU_SIS_Y_Min	-266.95	-1259.46	-104.60	No
1.675_ELU_SIS_Y_Min	-267.11	-164.05	-62.32	No
2.5_ELU_SIS_Y_Min	-135.98	538.80	-12.09	No
3.075_ELU_SIS_Y_Min	-143.39	161.60	-12.89	No
3.65_ELU_SIS_Y_Min	-206.71	-997.18	-46.73	No
4.35_ELU_SIS_Y_Min	-203.94	-280.69	-27.38	No
5.05_ELU_SIS_Y_Min	-203.94	38.46	-26.34	No
5.75_ELU_SIS_Y_Min	-206.72	-277.46	-27.08	No
6.45_ELU_SIS_Y_Min	-144.56	-549.17	-26.47	No
7.025_ELU_SIS_Y_Min	-137.14	173.73	-12.96	No
7.6_ELU_SIS_Y_Min	-268.30	457.47	-59.60	No
8.425_ELU_SIS_Y_Min	-268.14	-155.56	-62.22	No
9.25_ELU_SIS_Y_Min	-36.78	-81.34	-28.79	No
0_ELU_SIS_Z_Max	11.10	1.87E-013	2.18E-011	No
0.85_ELU_SIS_Z_Max	43.52	99.66	9.44	No
1.675_ELU_SIS_Z_Max	43.58	484.07	144.76	No
2.5_ELU_SIS_Z_Max	4.40	966.58	260.46	No
3.075_ELU_SIS_Z_Max	6.63	413.89	229.22	No
3.65_ELU_SIS_Z_Max	20.66	82.55	188.47	No
4.35_ELU_SIS_Z_Max	19.83	159.36	277.58	No
5.05_ELU_SIS_Z_Max	19.82	352.03	351.89	No
5.75_ELU_SIS_Z_Max	20.65	163.90	277.59	No
6.45_ELU_SIS_Z_Max	6.44	-28.86	188.37	No
7.025_ELU_SIS_Z_Max	4.21	435.60	229.22	No

Combinación	N_d [kN]	Myy_d [kN·m]	Mzz_d [kN·m]	Accidental
7.6_ELU_SIS_Z_Max	43.37	1038.43	274.65	No
8.425_ELU_SIS_Z_Max	43.31	501.98	144.77	No
9.25_ELU_SIS_Z_Max	11.10	-71.22	2.35	No
0_ELU_SIS_Z_Min	-11.10	-2.06E-012	-1.45E-011	No
0.85_ELU_SIS_Z_Min	-108.67	-571.68	-58.08	No
1.675_ELU_SIS_Z_Min	-108.73	94.73	-12.54	No
2.5_ELU_SIS_Z_Min	-69.24	547.75	7.73	No
3.075_ELU_SIS_Z_Min	-71.47	199.13	5.02	No
3.65_ELU_SIS_Z_Min	-94.25	-462.45	-17.24	No
4.35_ELU_SIS_Z_Min	-93.42	-64.42	4.48	No
5.05_ELU_SIS_Z_Min	-93.43	135.01	8.59	No
5.75_ELU_SIS_Z_Min	-94.26	-61.19	4.78	No
6.45_ELU_SIS_Z_Min	-72.64	-306.97	-10.11	No
7.025_ELU_SIS_Z_Min	-70.41	211.26	4.94	No
7.6_ELU_SIS_Z_Min	-109.92	535.68	-6.60	No
8.425_ELU_SIS_Z_Min	-109.86	103.22	-12.43	No
9.25_ELU_SIS_Z_Min	-11.10	-84.82	-26.25	No

5.- Comprobaciones

La sección transversal resiste todas las combinaciones.

Combinación: 7.6_ELU_01_Max

5.1.- Comprobación de resistencia a los esfuerzos actuantes

5.1.1) Hormigón

Máxima deformación de compresión: -0.30 ‰
Máxima tensión de compresión: -5.62 MPa

5.1.2) Armadura

Máxima deformación de compresión: -0.26 ‰
Máxima tensión de compresión: -52.05 MPa
Máxima deformación de tracción: 0.95 ‰
Máxima tensión de tracción: 190.29 MPa

5.1.3) Equilibrio

Valor y posición de las resultantes internas

Resultante	Valor [kN]	Y [m]	Z [m]	Vista 3D
Hormigón	-1423.25	0.141	-0.598	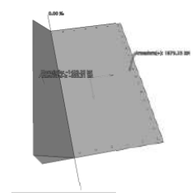
Armadura comprimida	-333.31	0.106	-0.648	
Armadura traccionada	1679.55	-0.036	0.584	

5.2.- Comprobación de resistencia para la situación de colapso

Modo de colapsar: Axil y momento alrededor del eje Z constantes
N_u: -77.01 kN
Myy_u: 5491.69 kN·m
Mzz_u: 297.18 kN·m
Aprovechamiento: 37.31 %

5.2.1) Hormigón

Máxima deformación de compresión: -1.49 ‰
Máxima tensión de compresión: -18.71 MPa

5.2.2) Armadura

Máxima deformación de compresión: -1.08 ‰
Máxima tensión de compresión: -216.68 MPa
Máxima deformación de tracción: 10.00 ‰
Máxima tensión de tracción: 434.78 MPa

5.2.3) Equilibrio

Valor y posición de las resultantes internas

Resultante	Valor [kN]	Y [m]	Z [m]	Vista 3D
Hormigón	-3428.39	0.058	-0.641	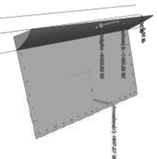
Armadura comprimida	-1495.89	0.049	-0.652	
Armadura traccionada	4847.27	-0.005	0.478	

CÁLCULO A CORTANTE SEGÚN EHE

FECHA:	08/06/2017
OBRA:	AUTOVÍA ALMANZORA
ESTRUCTURA:	E1

CÁLCULO ARMADURA DE CORTANTE EN VIGA CARGADERO DE ESTRIBO

REF.	DATOS													RESULTADOS				
	Vrd (ton)	Nd (ton)	Ac (m2)	fck (Mpa)	γc	bo (cm)	d (cm)	cotg(θ)	alpha (º)	As (cm2)	Ap (cm2)	fyk (kp/cm2)	fpk (kp/cm2)	Vrd sin cercos (ton)	As,nec (cm2/ml)	Sep.max (cm)	Vu1 (ton)	Decalaje (m)
0_ELU_01_Max	7.69	0.00	2.80	30	1.5	200	130	1	90	78.4	0	5100	15700.00	92.36	20.00	30.00	1591.84	3.80
0.85_ELU_01_Max	62.25	-0.02	2.80	30	1.5	200	130	1	90	78.4	0	5100	15700.00	92.35	20.00	30.00	1591.84	1.24
1.675_ELU_01_Max	51.90	-0.02	2.80	30	1.5	200	130	1	90	78.4	0	5100	15700.00	92.35	20.00	30.00	1591.84	1.31
2.5_ELU_01_Max	142.16	5.43	2.80	30	1.5	200	130	1	90	78.4	0	5100	15700.00	93.11	20.00	30.00	1591.84	1.04
3.075_ELU_01_Max	149.02	5.43	2.80	30	1.5	200	130	1	90	78.4	0	5100	15700.00	93.11	20.00	30.00	1591.84	1.03
3.65_ELU_01_Max	36.49	1.73	2.80	30	1.5	200	130	1	90	78.4	0	5100	15700.00	92.60	20.00	30.00	1591.84	1.49
4.35_ELU_01_Max	27.48	1.73	2.80	30	1.5	200	130	1	90	78.4	0	5100	15700.00	92.60	20.00	30.00	1591.84	1.70
5.05_ELU_01_Max	57.47	7.19	2.80	30	1.5	200	130	1	90	78.4	0	5100	15700.00	93.36	20.00	30.00	1591.84	1.27
5.75_ELU_01_Max	66.41	7.19	2.80	30	1.5	200	130	1	90	78.4	0	5100	15700.00	93.36	20.00	30.00	1591.84	1.22
6.45_ELU_01_Max	99.41	2.39	2.80	30	1.5	200	130	1	90	78.4	0	5100	15700.00	92.69	20.00	30.00	1591.84	1.10
7.025_ELU_01_Max	92.51	2.39	2.80	30	1.5	200	130	1	90	78.4	0	5100	15700.00	92.69	20.00	30.00	1591.84	1.12
7.6_ELU_01_Max	156.55	7.85	2.80	30	1.5	200	130	1	90	78.4	0	5100	15700.00	93.45	20.00	30.00	1591.84	1.02
8.425_ELU_01_Max	166.73	7.85	2.80	30	1.5	200	130	1	90	78.4	0	5100	15700.00	93.45	20.00	30.00	1591.84	1.01
9.25_ELU_01_Max	18.48	0.00	2.80	30	1.5	200	130	1	90	78.4	0	5100	15700.00	92.36	20.00	30.00	1591.84	2.09
0_ELU_01_Min	7.69	0.00	2.80	30	1.5	200	130	1	90	78.4	0	5100	15700.00	92.36	20.00	30.00	1591.84	3.80
0.85_ELU_01_Min	108.73	2.04	2.80	30	1.5	200	130	1	90	78.4	0	5100	15700.00	92.64	20.00	30.00	1591.84	1.08
1.675_ELU_01_Min	98.08	2.04	2.80	30	1.5	200	130	1	90	78.4	0	5100	15700.00	92.64	20.00	30.00	1591.84	1.11
2.5_ELU_01_Min	91.60	7.44	2.80	30	1.5	200	130	1	90	78.4	0	5100	15700.00	93.39	20.00	30.00	1591.84	1.12
3.075_ELU_01_Min	98.33	7.44	2.80	30	1.5	200	130	1	90	78.4	0	5100	15700.00	93.39	20.00	30.00	1591.84	1.11
3.65_ELU_01_Min	70.02	4.79	2.80	30	1.5	200	130	1	90	78.4	0	5100	15700.00	93.02	20.00	30.00	1591.84	1.20
4.35_ELU_01_Min	60.90	4.79	2.80	30	1.5	200	130	1	90	78.4	0	5100	15700.00	93.02	20.00	30.00	1591.84	1.25
5.05_ELU_01_Min	38.58	10.23	2.80	30	1.5	200	130	1	90	78.4	0	5100	15700.00	93.78	20.00	30.00	1591.84	1.46
5.75_ELU_01_Min	46.92	10.23	2.80	30	1.5	200	130	1	90	78.4	0	5100	15700.00	93.78	20.00	30.00	1591.84	1.36
6.45_ELU_01_Min	199.94	6.09	2.80	30	1.5	200	130	1	90	78.4	0	5100	15700.00	93.20	25.70	30.00	1591.84	0.99
7.025_ELU_01_Min	193.06	6.09	2.80	30	1.5	200	130	1	90	78.4	0	5100	15700.00	93.20	24.26	30.00	1591.84	0.99
7.6_ELU_01_Min	75.60	11.59	2.80	30	1.5	200	130	1	90	78.4	0	5100	15700.00	93.97	20.00	30.00	1591.84	1.18
8.425_ELU_01_Min	85.39	11.59	2.80	30	1.5	200	130	1	90	78.4	0	5100	15700.00	93.97	20.00	30.00	1591.84	1.14
9.25_ELU_01_Min	18.48	0.00	2.80	30	1.5	200	130	1	90	78.4	0	5100	15700.00	92.36	20.00	30.00	1591.84	2.09
0_ELU_02_Max	5.70	0.00	2.80	30	1.5	200	130	1	90	78.4	0	5100	15700.00	92.36	20.00	30.00	1591.84	4.82

CÁLCULO A CORTANTE SEGÚN EHE

FECHA:	08/06/2017
OBRA:	AUTOVÍA ALMANZORA
ESTRUCTURA:	E1

CÁLCULO ARMADURA DE CORTANTE EN VIGA CARGADERO DE ESTRIBO

REF.	DATOS													RESULTADOS				
	Vrd (ton)	Nd (ton)	Ac (m2)	fck (Mpa)	γc	bo (cm)	d (cm)	cotg(θ)	alpha (º)	As (cm2)	Ap (cm2)	fyk (kp/cm2)	fpk (kp/cm2)	Vrd sin cercos (ton)	As,nec (cm2/ml)	Sep.max (cm)	Vu1 (ton)	Decalaje (m)
0.85_ELU_02_Max	39.89	-1.13	2.80	30	1.5	200	130	1	90	78.4	0	5100	15700.00	92.20	20.00	30.00	1591.84	1.44
1.675_ELU_02_Max	31.57	-1.13	2.80	30	1.5	200	130	1	90	78.4	0	5100	15700.00	92.20	20.00	30.00	1591.84	1.59
2.5_ELU_02_Max	116.43	4.33	2.80	30	1.5	200	130	1	90	78.4	0	5100	15700.00	92.96	20.00	30.00	1591.84	1.07
3.075_ELU_02_Max	121.60	4.33	2.80	30	1.5	200	130	1	90	78.4	0	5100	15700.00	92.96	20.00	30.00	1591.84	1.06
3.65_ELU_02_Max	24.71	0.50	2.80	30	1.5	200	130	1	90	78.4	0	5100	15700.00	92.42	20.00	30.00	1591.84	1.79
4.35_ELU_02_Max	17.38	0.50	2.80	30	1.5	200	130	1	90	78.4	0	5100	15700.00	92.42	20.00	30.00	1591.84	2.17
5.05_ELU_02_Max	49.33	5.95	2.80	30	1.5	200	130	1	90	78.4	0	5100	15700.00	93.18	20.00	30.00	1591.84	1.34
5.75_ELU_02_Max	56.34	5.95	2.80	30	1.5	200	130	1	90	78.4	0	5100	15700.00	93.18	20.00	30.00	1591.84	1.28
6.45_ELU_02_Max	70.32	1.29	2.80	30	1.5	200	130	1	90	78.4	0	5100	15700.00	92.53	20.00	30.00	1591.84	1.20
7.025_ELU_02_Max	65.06	1.29	2.80	30	1.5	200	130	1	90	78.4	0	5100	15700.00	92.53	20.00	30.00	1591.84	1.22
7.6_ELU_02_Max	138.53	6.75	2.80	30	1.5	200	130	1	90	78.4	0	5100	15700.00	93.29	20.00	30.00	1591.84	1.04
8.425_ELU_02_Max	146.33	6.75	2.80	30	1.5	200	130	1	90	78.4	0	5100	15700.00	93.29	20.00	30.00	1591.84	1.03
9.25_ELU_02_Max	14.22	0.00	2.80	30	1.5	200	130	1	90	78.4	0	5100	15700.00	92.36	20.00	30.00	1591.84	2.46
0_ELU_02_Min	5.70	0.00	2.80	30	1.5	200	130	1	90	78.4	0	5100	15700.00	92.36	20.00	30.00	1591.84	4.82
0.85_ELU_02_Min	86.67	0.93	2.80	30	1.5	200	130	1	90	78.4	0	5100	15700.00	92.49	20.00	30.00	1591.84	1.14
1.675_ELU_02_Min	78.20	0.93	2.80	30	1.5	200	130	1	90	78.4	0	5100	15700.00	92.49	20.00	30.00	1591.84	1.17
2.5_ELU_02_Min	65.83	6.34	2.80	30	1.5	200	130	1	90	78.4	0	5100	15700.00	93.24	20.00	30.00	1591.84	1.22
3.075_ELU_02_Min	70.87	6.34	2.80	30	1.5	200	130	1	90	78.4	0	5100	15700.00	93.24	20.00	30.00	1591.84	1.20
3.65_ELU_02_Min	58.20	3.55	2.80	30	1.5	200	130	1	90	78.4	0	5100	15700.00	92.85	20.00	30.00	1591.84	1.26
4.35_ELU_02_Min	50.94	3.55	2.80	30	1.5	200	130	1	90	78.4	0	5100	15700.00	92.85	20.00	30.00	1591.84	1.32
5.05_ELU_02_Min	30.20	8.99	2.80	30	1.5	200	130	1	90	78.4	0	5100	15700.00	93.61	20.00	30.00	1591.84	1.63
5.75_ELU_02_Min	36.53	8.99	2.80	30	1.5	200	130	1	90	78.4	0	5100	15700.00	93.61	20.00	30.00	1591.84	1.50
6.45_ELU_02_Min	170.80	4.99	2.80	30	1.5	200	130	1	90	78.4	0	5100	15700.00	93.05	20.00	30.00	1591.84	1.01
7.025_ELU_02_Min	165.61	4.99	2.80	30	1.5	200	130	1	90	78.4	0	5100	15700.00	93.05	20.00	30.00	1591.84	1.01
7.6_ELU_02_Min	57.43	10.49	2.80	30	1.5	200	130	1	90	78.4	0	5100	15700.00	93.82	20.00	30.00	1591.84	1.27
8.425_ELU_02_Min	64.83	10.49	2.80	30	1.5	200	130	1	90	78.4	0	5100	15700.00	93.82	20.00	30.00	1591.84	1.23
9.25_ELU_02_Min	14.22	0.00	2.80	30	1.5	200	130	1	90	78.4	0	5100	15700.00	92.36	20.00	30.00	1591.84	2.46
0_ELU_SIS_X_Max	7.89	-1.13	2.80	30	1.5	200	130	1	90	78.4	0	5100	15700.00	92.20	20.00	30.00	1591.84	3.72
0.85_ELU_SIS_X_Max	42.17	-4.05	2.80	30	1.5	200	130	1	90	78.4	0	5100	15700.00	91.79	20.00	30.00	1591.84	1.41

CÁLCULO A CORTANTE SEGÚN EHE

FECHA:	08/06/2017
OBRA:	AUTOVÍA ALMANZORA
ESTRUCTURA:	E1

CÁLCULO ARMADURA DE CORTANTE EN VIGA CARGADERO DE ESTRIBO

REF.	DATOS													RESULTADOS				
	Vrd (ton)	Nd (ton)	Ac (m2)	fck (Mpa)	γc	bo (cm)	d (cm)	cotg(θ)	alpha (º)	As (cm2)	Ap (cm2)	fyk (kp/cm2)	fpk (kp/cm2)	Vrd sin cercos (ton)	As,nec (cm2/ml)	Sep.max (cm)	Vu1 (ton)	Decalaje (m)
1.675_ELU_SIS_X_Max	36.38	-4.06	2.80	30	1.5	200	130	1	90	78.4	0	5100	15700.00	91.79	20.00	30.00	1591.84	1.49
2.5_ELU_SIS_X_Max	98.48	-0.06	2.80	30	1.5	200	130	1	90	78.4	0	5100	15700.00	92.35	20.00	30.00	1591.84	1.11
3.075_ELU_SIS_X_Max	103.73	-0.29	2.80	30	1.5	200	130	1	90	78.4	0	5100	15700.00	92.32	20.00	30.00	1591.84	1.09
3.65_ELU_SIS_X_Max	15.06	-1.69	2.80	30	1.5	200	130	1	90	78.4	0	5100	15700.00	92.12	20.00	30.00	1591.84	2.36
4.35_ELU_SIS_X_Max	11.75	-1.61	2.80	30	1.5	200	130	1	90	78.4	0	5100	15700.00	92.13	20.00	30.00	1591.84	2.78
5.05_ELU_SIS_X_Max	53.13	-1.61	2.80	30	1.5	200	130	1	90	78.4	0	5100	15700.00	92.13	20.00	30.00	1591.84	1.30
5.75_ELU_SIS_X_Max	59.79	-1.69	2.80	30	1.5	200	130	1	90	78.4	0	5100	15700.00	92.12	20.00	30.00	1591.84	1.25
6.45_ELU_SIS_X_Max	67.85	-0.27	2.80	30	1.5	200	130	1	90	78.4	0	5100	15700.00	92.32	20.00	30.00	1591.84	1.21
7.025_ELU_SIS_X_Max	62.96	-0.04	2.80	30	1.5	200	130	1	90	78.4	0	5100	15700.00	92.35	20.00	30.00	1591.84	1.23
7.6_ELU_SIS_X_Max	90.64	-4.04	2.80	30	1.5	200	130	1	90	78.4	0	5100	15700.00	91.79	20.00	30.00	1591.84	1.12
8.425_ELU_SIS_X_Max	98.31	-4.03	2.80	30	1.5	200	130	1	90	78.4	0	5100	15700.00	91.79	20.00	30.00	1591.84	1.10
9.25_ELU_SIS_X_Max	12.75	-1.13	2.80	30	1.5	200	130	1	90	78.4	0	5100	15700.00	92.20	20.00	30.00	1591.84	2.63
0_ELU_SIS_X_Min	7.24	1.13	2.80	30	1.5	200	130	1	90	78.4	0	5100	15700.00	92.51	20.00	30.00	1591.84	3.98
0.85_ELU_SIS_X_Min	103.16	10.69	2.80	30	1.5	200	130	1	90	78.4	0	5100	15700.00	93.84	20.00	30.00	1591.84	1.10
1.675_ELU_SIS_X_Min	95.48	10.70	2.80	30	1.5	200	130	1	90	78.4	0	5100	15700.00	93.85	20.00	30.00	1591.84	1.11
2.5_ELU_SIS_X_Min	57.29	6.67	2.80	30	1.5	200	130	1	90	78.4	0	5100	15700.00	93.28	20.00	30.00	1591.84	1.27
3.075_ELU_SIS_X_Min	62.12	6.90	2.80	30	1.5	200	130	1	90	78.4	0	5100	15700.00	93.32	20.00	30.00	1591.84	1.24
3.65_ELU_SIS_X_Min	67.16	9.19	2.80	30	1.5	200	130	1	90	78.4	0	5100	15700.00	93.64	20.00	30.00	1591.84	1.21
4.35_ELU_SIS_X_Min	60.50	9.11	2.80	30	1.5	200	130	1	90	78.4	0	5100	15700.00	93.62	20.00	30.00	1591.84	1.25
5.05_ELU_SIS_X_Min	11.73	9.11	2.80	30	1.5	200	130	1	90	78.4	0	5100	15700.00	93.62	20.00	30.00	1591.84	2.80
5.75_ELU_SIS_X_Min	11.96	9.19	2.80	30	1.5	200	130	1	90	78.4	0	5100	15700.00	93.64	20.00	30.00	1591.84	2.77
6.45_ELU_SIS_X_Min	112.46	7.02	2.80	30	1.5	200	130	1	90	78.4	0	5100	15700.00	93.33	20.00	30.00	1591.84	1.08
7.025_ELU_SIS_X_Min	107.19	6.79	2.80	30	1.5	200	130	1	90	78.4	0	5100	15700.00	93.30	20.00	30.00	1591.84	1.09
7.6_ELU_SIS_X_Min	32.35	10.82	2.80	30	1.5	200	130	1	90	78.4	0	5100	15700.00	93.86	20.00	30.00	1591.84	1.58
8.425_ELU_SIS_X_Min	37.43	10.81	2.80	30	1.5	200	130	1	90	78.4	0	5100	15700.00	93.86	20.00	30.00	1591.84	1.48
9.25_ELU_SIS_X_Min	15.56	1.13	2.80	30	1.5	200	130	1	90	78.4	0	5100	15700.00	92.51	20.00	30.00	1591.84	2.32
0_ELU_SIS_Y_Max	6.42	-3.75	2.80	30	1.5	200	130	1	90	78.4	0	5100	15700.00	91.83	20.00	30.00	1591.84	4.34
0.85_ELU_SIS_Y_Max	11.59	-20.57	2.80	30	1.5	200	130	1	90	78.4	0	5100	15700.00	89.49	20.00	30.00	1591.84	2.72
1.675_ELU_SIS_Y_Max	17.89	-20.59	2.80	30	1.5	200	130	1	90	78.4	0	5100	15700.00	89.49	20.00	30.00	1591.84	2.07

CÁLCULO A CORTANTE SEGÚN EHE

FECHA:	08/06/2017
OBRA:	AUTOVÍA ALMANZORA
ESTRUCTURA:	E1

CÁLCULO ARMADURA DE CORTANTE EN VIGA CARGADERO DE ESTRIBO

REF.	DATOS													RESULTADOS				
	Vrd (ton)	Nd (ton)	Ac (m2)	fck (Mpa)	γc	bo (cm)	d (cm)	cotg(θ)	alpha (º)	As (cm2)	Ap (cm2)	fyk (kp/cm2)	fpk (kp/cm2)	Vrd sin cercos (ton)	As,nec (cm2/ml)	Sep.max (cm)	Vu1 (ton)	Decalaje (m)
2.5_ELU_SIS_Y_Max	129.57	-7.25	2.80	30	1.5	200	130	1	90	78.4	0	5100	15700.00	91.35	20.00	30.00	1591.84	1.05
3.075_ELU_SIS_Y_Max	134.65	-8.01	2.80	30	1.5	200	130	1	90	78.4	0	5100	15700.00	91.24	20.00	30.00	1591.84	1.04
3.65_ELU_SIS_Y_Max	34.67	-13.57	2.80	30	1.5	200	130	1	90	78.4	0	5100	15700.00	90.47	20.00	30.00	1591.84	1.50
4.35_ELU_SIS_Y_Max	40.51	-13.29	2.80	30	1.5	200	130	1	90	78.4	0	5100	15700.00	90.50	20.00	30.00	1591.84	1.41
5.05_ELU_SIS_Y_Max	97.19	-13.29	2.80	30	1.5	200	130	1	90	78.4	0	5100	15700.00	90.50	20.00	30.00	1591.84	1.10
5.75_ELU_SIS_Y_Max	103.52	-13.57	2.80	30	1.5	200	130	1	90	78.4	0	5100	15700.00	90.47	20.00	30.00	1591.84	1.09
6.45_ELU_SIS_Y_Max	36.24	-7.99	2.80	30	1.5	200	130	1	90	78.4	0	5100	15700.00	91.24	20.00	30.00	1591.84	1.49
7.025_ELU_SIS_Y_Max	31.26	-7.23	2.80	30	1.5	200	130	1	90	78.4	0	5100	15700.00	91.35	20.00	30.00	1591.84	1.58
7.6_ELU_SIS_Y_Max	137.29	-20.57	2.80	30	1.5	200	130	1	90	78.4	0	5100	15700.00	89.49	20.00	30.00	1591.84	1.03
8.425_ELU_SIS_Y_Max	144.72	-20.55	2.80	30	1.5	200	130	1	90	78.4	0	5100	15700.00	89.49	20.00	30.00	1591.84	1.03
9.25_ELU_SIS_Y_Max	12.64	-3.75	2.80	30	1.5	200	130	1	90	78.4	0	5100	15700.00	91.83	20.00	30.00	1591.84	2.64
0_ELU_SIS_Y_Min	5.67	3.75	2.80	30	1.5	200	130	1	90	78.4	0	5100	15700.00	92.88	20.00	30.00	1591.84	4.85
0.85_ELU_SIS_Y_Min	149.19	27.21	2.80	30	1.5	200	130	1	90	78.4	0	5100	15700.00	96.15	20.00	30.00	1591.84	1.03
1.675_ELU_SIS_Y_Min	141.72	27.23	2.80	30	1.5	200	130	1	90	78.4	0	5100	15700.00	96.15	20.00	30.00	1591.84	1.04
2.5_ELU_SIS_Y_Min	25.41	13.86	2.80	30	1.5	200	130	1	90	78.4	0	5100	15700.00	94.29	20.00	30.00	1591.84	1.77
3.075_ELU_SIS_Y_Min	30.30	14.62	2.80	30	1.5	200	130	1	90	78.4	0	5100	15700.00	94.39	20.00	30.00	1591.84	1.63
3.65_ELU_SIS_Y_Min	110.77	21.07	2.80	30	1.5	200	130	1	90	78.4	0	5100	15700.00	95.29	20.00	30.00	1591.84	1.08
4.35_ELU_SIS_Y_Min	104.42	20.79	2.80	30	1.5	200	130	1	90	78.4	0	5100	15700.00	95.25	20.00	30.00	1591.84	1.10
5.05_ELU_SIS_Y_Min	46.70	20.79	2.80	30	1.5	200	130	1	90	78.4	0	5100	15700.00	95.25	20.00	30.00	1591.84	1.37
5.75_ELU_SIS_Y_Min	40.71	21.07	2.80	30	1.5	200	130	1	90	78.4	0	5100	15700.00	95.29	20.00	30.00	1591.84	1.44
6.45_ELU_SIS_Y_Min	143.31	14.74	2.80	30	1.5	200	130	1	90	78.4	0	5100	15700.00	94.41	20.00	30.00	1591.84	1.04
7.025_ELU_SIS_Y_Min	138.21	13.98	2.80	30	1.5	200	130	1	90	78.4	0	5100	15700.00	94.30	20.00	30.00	1591.84	1.04
7.6_ELU_SIS_Y_Min	23.85	27.35	2.80	30	1.5	200	130	1	90	78.4	0	5100	15700.00	96.16	20.00	30.00	1591.84	1.84
8.425_ELU_SIS_Y_Min	16.83	27.33	2.80	30	1.5	200	130	1	90	78.4	0	5100	15700.00	96.16	20.00	30.00	1591.84	2.23
9.25_ELU_SIS_Y_Min	14.28	3.75	2.80	30	1.5	200	130	1	90	78.4	0	5100	15700.00	92.88	20.00	30.00	1591.84	2.45
0_ELU_SIS_Z_Max	6.74	-1.13	2.80	30	1.5	200	130	1	90	78.4	0	5100	15700.00	92.20	20.00	30.00	1591.84	4.20
0.85_ELU_SIS_Z_Max	34.30	-4.44	2.80	30	1.5	200	130	1	90	78.4	0	5100	15700.00	91.74	20.00	30.00	1591.84	1.53
1.675_ELU_SIS_Z_Max	27.13	-4.44	2.80	30	1.5	200	130	1	90	78.4	0	5100	15700.00	91.74	20.00	30.00	1591.84	1.70
2.5_ELU_SIS_Z_Max	107.36	-0.45	2.80	30	1.5	200	130	1	90	78.4	0	5100	15700.00	92.29	20.00	30.00	1591.84	1.09

CÁLCULO A CORTANTE SEGÚN EHE

FECHA:	08/06/2017
OBRA:	AUTOVÍA ALMANZORA
ESTRUCTURA:	E1

CÁLCULO ARMADURA DE CORTANTE EN VIGA CARGADERO DE ESTRIBO

REF.	DATOS													RESULTADOS				
	Vrd (ton)	Nd (ton)	Ac (m2)	fck (Mpa)	γc	bo (cm)	d (cm)	cotg(θ)	alpha (º)	As (cm2)	Ap (cm2)	fyk (kp/cm2)	fpk (kp/cm2)	Vrd sin cercos (ton)	As,nec (cm2/ml)	Sep.max (cm)	Vu1 (ton)	Decalaje (m)
3.075_ELU_SIS_Z_Max	112.56	-0.68	2.80	30	1.5	200	130	1	90	78.4	0	5100	15700.00	92.26	20.00	30.00	1591.84	1.08
3.65_ELU_SIS_Z_Max	11.12	-2.11	2.80	30	1.5	200	130	1	90	78.4	0	5100	15700.00	92.06	20.00	30.00	1591.84	2.89
4.35_ELU_SIS_Z_Max	4.89	-2.02	2.80	30	1.5	200	130	1	90	78.4	0	5100	15700.00	92.07	20.00	30.00	1591.84	5.45
5.05_ELU_SIS_Z_Max	52.42	-2.02	2.80	30	1.5	200	130	1	90	78.4	0	5100	15700.00	92.07	20.00	30.00	1591.84	1.30
5.75_ELU_SIS_Z_Max	59.02	-2.11	2.80	30	1.5	200	130	1	90	78.4	0	5100	15700.00	92.06	20.00	30.00	1591.84	1.26
6.45_ELU_SIS_Z_Max	58.34	-0.66	2.80	30	1.5	200	130	1	90	78.4	0	5100	15700.00	92.26	20.00	30.00	1591.84	1.26
7.025_ELU_SIS_Z_Max	53.48	-0.43	2.80	30	1.5	200	130	1	90	78.4	0	5100	15700.00	92.30	20.00	30.00	1591.84	1.30
7.6_ELU_SIS_Z_Max	92.73	-4.42	2.80	30	1.5	200	130	1	90	78.4	0	5100	15700.00	91.74	20.00	30.00	1591.84	1.12
8.425_ELU_SIS_Z_Max	100.39	-4.41	2.80	30	1.5	200	130	1	90	78.4	0	5100	15700.00	91.74	20.00	30.00	1591.84	1.10
9.25_ELU_SIS_Z_Max	12.25	-1.13	2.80	30	1.5	200	130	1	90	78.4	0	5100	15700.00	92.20	20.00	30.00	1591.84	2.71
0_ELU_SIS_Z_Min	5.17	1.13	2.80	30	1.5	200	130	1	90	78.4	0	5100	15700.00	92.51	20.00	30.00	1591.84	5.22
0.85_ELU_SIS_Z_Min	104.97	11.08	2.80	30	1.5	200	130	1	90	78.4	0	5100	15700.00	93.90	20.00	30.00	1591.84	1.09
1.675_ELU_SIS_Z_Min	97.28	11.08	2.80	30	1.5	200	130	1	90	78.4	0	5100	15700.00	93.90	20.00	30.00	1591.84	1.11
2.5_ELU_SIS_Z_Min	47.60	7.06	2.80	30	1.5	200	130	1	90	78.4	0	5100	15700.00	93.34	20.00	30.00	1591.84	1.35
3.075_ELU_SIS_Z_Min	52.41	7.29	2.80	30	1.5	200	130	1	90	78.4	0	5100	15700.00	93.37	20.00	30.00	1591.84	1.31
3.65_ELU_SIS_Z_Min	66.37	9.61	2.80	30	1.5	200	130	1	90	78.4	0	5100	15700.00	93.69	20.00	30.00	1591.84	1.22
4.35_ELU_SIS_Z_Min	59.75	9.52	2.80	30	1.5	200	130	1	90	78.4	0	5100	15700.00	93.68	20.00	30.00	1591.84	1.26
5.05_ELU_SIS_Z_Min	1.75	9.52	2.80	30	1.5	200	130	1	90	78.4	0	5100	15700.00	93.68	20.00	30.00	1591.84	13.80
5.75_ELU_SIS_Z_Min	4.50	9.61	2.80	30	1.5	200	130	1	90	78.4	0	5100	15700.00	93.69	20.00	30.00	1591.84	5.89
6.45_ELU_SIS_Z_Min	121.23	7.40	2.80	30	1.5	200	130	1	90	78.4	0	5100	15700.00	93.39	20.00	30.00	1591.84	1.06
7.025_ELU_SIS_Z_Min	116.00	7.18	2.80	30	1.5	200	130	1	90	78.4	0	5100	15700.00	93.35	20.00	30.00	1591.84	1.07
7.6_ELU_SIS_Z_Min	21.08	11.21	2.80	30	1.5	200	130	1	90	78.4	0	5100	15700.00	93.92	20.00	30.00	1591.84	1.95
8.425_ELU_SIS_Z_Min	28.05	11.20	2.80	30	1.5	200	130	1	90	78.4	0	5100	15700.00	93.92	20.00	30.00	1591.84	1.68
9.25_ELU_SIS_Z_Min	14.57	1.13	2.80	30	1.5	200	130	1	90	78.4	0	5100	15700.00	92.51	20.00	30.00	1591.84	2.42

ESFUERZOS Y FLECHAS DE LA PRUEBA DE CARGA

c/ COLUMELA nº15, C.P. 11004 CÁDIZ. Tlf: 956222763 Fax: 956210106
e-mail: acl@acl-estructuras.com http://www.acl-estructuras.com

COMPARATIVO ESFUERZOS PRUEBA DE CARGA CON SC IAP11

		SC_TOTAL.				ENV_PCARGA				COMPARATIVA			
		max		min		max		min		max		min	
Frame	**Station**	**V2**	**M3**	**V2**	**M3**	**V2**	**M3**	**V2**	**M3**	**V2**	**M3**	**V2**	**M3**
Text	m	KN	KN-m	KN	KN-m	KN	KN-m	KN	KN-m	%	%	%	%
1	0	0.0	0.0	0.0	0.0	0.0	0.0	0.0	0.0	0%	0%	0%	0%
1	0.5	179.8	0.9	-1547.5	-270.7	111.7	-2.7	-788.0	-9.7	62%	0%	51%	4%
1	1.5	179.9	1473.9	-1471.5	-331.9	111.7	777.5	-788.0	-114.5	62%	53%	54%	35%
1	2	179.9	2209.0	-1471.5	-369.2	111.7	1171.0	-788.0	-170.5	62%	53%	54%	46%
1	3	181.5	3548.3	-1396.9	-456.3	111.7	1959.0	-788.0	-282.1	62%	55%	56%	62%
1	4	184.5	4775.5	-1323.9	-635.8	111.7	2747.0	-788.0	-393.8	61%	58%	60%	62%
1	5	199.4	5890.9	-1252.5	-815.4	111.7	3414.0	-650.7	-505.4	56%	58%	52%	62%
1	6	242.0	6895.2	-1182.9	-995.0	111.7	4064.7	-650.7	-617.1	46%	59%	55%	62%
1	7	285.9	7789.4	-1115.0	-1174.6	111.7	4715.4	-650.7	-728.7	39%	61%	58%	62%
1	8	331.0	8574.3	-1048.8	-1354.1	111.7	5283.6	-434.9	-840.4	34%	62%	41%	62%
1	9	377.5	9251.1	-984.4	-1533.7	111.7	5718.5	-434.9	-952.0	30%	62%	44%	62%
1	10	425.1	9821.1	-921.8	-1713.3	111.7	6153.5	-434.9	-1063.7	26%	63%	47%	62%
1	11	473.9	10285.7	-861.1	-1892.9	111.7	6513.7	-309.0	-1175.3	24%	63%	36%	62%
1	12	523.7	10646.5	-802.2	-2072.4	111.7	6748.3	-112.9	-1287.0	21%	63%	14%	62%
1	13	574.6	10905.3	-745.1	-2252.0	111.7	6790.9	-42.7	-1398.6	19%	62%	6%	62%
1	14	626.5	11064.0	-690.0	-2431.6	111.7	6833.6	-42.7	-1510.3	18%	62%	6%	62%
1	15	679.3	11124.5	-636.8	-2611.2	111.7	6876.3	-42.7	-1622.0	16%	62%	7%	62%
1	16	732.9	11089.3	-585.5	-2790.8	299.0	6915.1	111.7	-1733.6	41%	62%	0%	62%
1	17	787.3	10985.2	-536.1	-2970.3	299.0	6761.6	111.7	-1845.3	38%	62%	0%	62%
1	18	842.5	10789.6	-488.7	-3149.9	349.6	6478.7	111.7	-1956.9	41%	60%	0%	62%
1	19	898.3	10503.3	-443.3	-3329.5	349.6	6129.1	111.7	-2068.6	39%	58%	0%	62%
1	20	954.7	10128.9	-399.8	-3509.1	436.3	5779.5	111.7	-2180.2	46%	57%	0%	62%
1	21	1011.6	9669.5	-358.4	-3688.6	565.3	5289.2	111.7	-2291.9	56%	55%	0%	62%
1	22	1069.0	9127.8	-318.9	-3868.2	565.3	4723.9	111.7	-2403.5	53%	52%	0%	62%
1	23	1126.8	8507.2	-281.4	-4047.8	565.3	4158.5	111.7	-2515.2	50%	49%	0%	62%
1	24	1184.9	7810.8	-245.9	-4227.4	702.6	3571.2	111.7	-2626.8	59%	46%	0%	62%
1	25	1243.2	7042.2	-212.4	-4407.0	702.6	2868.5	111.7	-2738.5	57%	41%	0%	62%
1	26	1301.6	6205.0	-180.8	-4586.5	702.6	2165.9	111.7	-2850.1	54%	35%	0%	62%
1	27	1360.2	5303.0	-151.3	-4766.1	702.6	1463.3	111.7	-2961.8	52%	28%	0%	62%
1	28	1418.7	4349.0	-123.8	-4954.7	702.6	760.6	111.7	-3073.4	50%	17%	0%	62%
1	29	1477.1	3449.5	-98.3	-5254.5	702.6	58.0	111.7	-3185.1	48%	2%	0%	61%
1	30	1535.4	2630.3	-74.7	-5687.2	702.6	-644.7	111.7	-3296.7	46%	0%	0%	58%
1	31	1593.4	1882.9	-53.1	-6239.9	702.6	-1347.3	111.7	-3408.4	44%	0%	0%	55%
1	32	1689.8	1200.5	-33.4	-6901.3	702.6	-2049.9	111.7	-3520.0	42%	0%	0%	51%
1	33	1745.8	577.9	-15.7	-7661.0	702.6	-2752.1	111.7	-3631.6	40%	0%	0%	47%
1	33.75	1764.9	150.0	-9.4	-8290.5	702.6	-3279.1	111.7	-3938.6	40%	0%	0%	48%

COMPARATIVO ESFUERZOS PRUEBA DE CARGA CON SC IAP11

		SC_TOTAL.				ENV_PCARGA				COMPARATIVA			
		max		min		max		min		max		min	
Frame	**Station**	**V2**	**M3**	**V2**	**M3**	**V2**	**M3**	**V2**	**M3**	**V2**	**M3**	**V2**	**M3**
Text	m	KN	KN-m	KN	KN-m	KN	KN-m	KN	KN-m	%	%	%	%
1	34.5	9.3	61.2	-1820.9	-8977.3	-111.6	-3798.9	-702.7	-4265.8	0%	0%	39%	48%
1	35.25	9.4	150.0	-1764.9	-8290.5	-111.6	-3279.3	-702.7	-3938.0	0%	0%	40%	47%
1	36	15.7	577.8	-1745.8	-7661.4	-111.6	-2752.7	-702.7	-3631.5	0%	0%	40%	47%
1	37	33.5	1200.5	-1651.0	-6901.3	-111.6	-2050.0	-702.7	-3519.9	0%	0%	43%	51%
1	38	53.1	1882.9	-1593.4	-6239.9	-111.6	-1347.3	-702.7	-3408.2	0%	0%	44%	55%
1	39	74.7	2630.3	-1535.4	-5687.2	-111.6	-644.6	-702.7	-3296.6	0%	0%	46%	58%
1	40	98.3	3449.5	-1477.1	-5254.5	-111.6	58.1	-702.7	-3184.9	0%	2%	48%	61%
1	41	123.8	4349.0	-1418.7	-4954.7	-111.6	760.8	-702.7	-3073.3	0%	17%	50%	62%
1	42	151.3	5303.0	-1360.2	-4766.1	-111.6	1463.4	-702.7	-2961.6	0%	28%	52%	62%
1	43	180.8	6205.0	-1301.6	-4586.5	-111.6	2166.1	-702.7	-2850.0	0%	35%	54%	62%
1	44	212.4	7042.2	-1243.2	-4407.0	-111.6	2868.8	-702.7	-2738.3	0%	41%	57%	62%
1	45	245.9	7810.8	-1184.9	-4227.4	-111.6	3571.5	-702.7	-2626.7	0%	46%	59%	62%
1	46	281.4	8507.2	-1126.8	-4047.8	-111.6	4158.9	-565.4	-2515.0	0%	49%	50%	62%
1	47	318.9	9127.8	-1069.0	-3868.2	-111.6	4724.3	-565.4	-2403.4	0%	52%	53%	62%
1	48	358.4	9669.5	-1011.6	-3688.6	-111.6	5289.7	-565.4	-2291.7	0%	55%	56%	62%
1	49	399.8	10128.9	-954.7	-3509.1	-111.6	5779.5	-437.1	-2180.1	0%	57%	46%	62%
1	50	443.3	10503.3	-898.3	-3329.5	-111.6	6129.2	-349.6	-2068.5	0%	58%	39%	62%
1	51	488.7	10789.6	-842.5	-3149.9	-111.6	6478.8	-349.6	-1956.8	0%	60%	42%	62%
1	52	536.1	10985.2	-787.3	-2970.3	-111.6	6761.8	-299.8	-1845.2	0%	62%	38%	62%
1	53	585.5	11089.3	-732.9	-2790.8	-84.1	6915.3	-153.5	-1733.5	0%	62%	21%	62%
1	54	636.8	11124.5	-679.3	-2611.2	42.6	6876.6	-111.6	-1621.9	7%	62%	16%	62%
1	55	690.0	11064.0	-626.5	-2431.6	42.6	6834.0	-111.6	-1510.2	6%	62%	18%	62%
1	56	745.1	10905.3	-574.6	-2252.0	112.0	6791.4	-111.6	-1398.6	15%	62%	19%	62%
1	57	802.2	10646.5	-523.7	-2072.4	112.0	6748.8	-111.6	-1286.9	14%	63%	21%	62%
1	58	861.1	10285.7	-473.9	-1892.9	308.2	6513.9	-111.6	-1175.3	36%	63%	24%	62%
1	59	921.8	9821.1	-425.1	-1713.3	434.9	6153.6	-111.6	-1063.6	47%	63%	26%	62%
1	60	984.4	9251.1	-377.5	-1533.7	434.9	5718.7	-111.6	-952.0	44%	62%	30%	62%
1	61	1048.8	8574.3	-331.0	-1354.1	434.9	5283.8	-111.6	-840.3	41%	62%	34%	62%
1	62	1115.0	7789.4	-285.9	-1174.6	650.6	4715.2	-111.6	-728.7	58%	61%	39%	62%
1	63	1182.9	6895.2	-242.0	-995.0	650.6	4064.5	-111.6	-617.0	55%	59%	46%	62%
1	64	1252.5	5890.9	-199.4	-815.4	650.6	3413.9	-111.6	-505.4	52%	58%	56%	62%
1	65	1323.9	4775.5	-184.5	-635.8	787.9	2746.8	-111.6	-393.7	60%	58%	61%	62%
1	66	1396.9	3548.3	-181.5	-456.3	787.9	1958.9	-111.6	-282.1	56%	55%	62%	62%
1	67	1471.5	2209.5	-179.9	-369.1	787.9	1171.4	-111.6	-170.3	54%	53%	62%	46%
1	67.5	1471.5	1474.8	-179.9	-331.6	787.9	778.2	-111.6	-114.3	54%	53%	62%	34%
1	68.5	0.0	0.0	0.0	-259.4	0.0	0.0	0.0	0.0	0%	0%	0%	0%

PRUEBA DE CARGA

FLECHAS EN PUNTOS DE CONTROL

	VANO 1	VANO 2
HIPOTESIS 1	-12.7	4.3
HIPOTESIS 2	4.3	-12.7
HIPOTESIS 3	-5.0	-5.0

Flechas en mm. Valor negativo significa descenso

Apéndice 2.- Definición y cálculos Estructura E-02

DISEÑO Y CÁLCULO DE ESTRUCTURAS

NOTA DE CÁLCULO DE ESTRUCTURA	
PROYECTO:	**AUTOVÍA DE ALMANZORA (A-334). TRAMO: INTERSECCIÓN EL CUCADOR- ENLACE CON LA AL-7106 EN LA CONCEPCIÓN.**
ESTRUCTURA:	**ESTRUCTURA E-2. OBRA DE PASO P.K. 0+330 (ENLACE A-334)**
SITUACIÓN:	**ALMERÍA**
FECHA:	**16 DE JUNIO DE 2017**

c/ COLUMELA nº15, C.P. 11004 CÁDIZ. Tlf: 956222763 Fax: 956210106
e-mail: acl@acl-estructuras.com http://www.acl-estructuras.com

CONTENIDO DE LA PRESENTE NOTA

MEMORIA DE CÁLCULO

ANEJO DE CÁLCULOS:

- ESTRUCTURA 15.3 METROS: CÁLCULO DE TABLERO
- ESTRUCTURA 15.3 METROS: CÁLCULO DE ACCIONES HORIZONTALES, NEOPRENOS Y JUNTA
- ESTRUCTURA 15.3 METROS: CÁLCULO DE ESTRIBO CARGADERO
- ESTRUCTURA 15.3 METROS: CÁLCULO DE PRUEBA DE CARGA

- ESTRUCTURA 11.8 METROS: CÁLCULO DE TABLERO
- ESTRUCTURA 11.8 METROS: CÁLCULO DE ACCIONES HORIZONTALES, NEOPRENOS Y JUNTA
- ESTRUCTURA 11.8 METROS: CÁLCULO DE ESTRIBO CARGADERO
- ESTRUCTURA 11.8 METROS: CÁLCULO DE PRUEBA DE CARGA

c/ COLUMELA nº15, C.P. 11004 CÁDIZ. Tlf: 956222763 Fax: 956210106
e-mail: acl@acl-estructuras.com *http://www.acl-estructuras.com*

MEMORIA DE CÁLCULO

c/ COLUMELA nº15, C.P. 11004 CÁDIZ. Tlf: 956222763 Fax: 956210106
e-mail: acl@acl-estructuras.com http://www.acl-estructuras.com

ÍNDICE DE LA MEMORIA

1 INTRODUCCIÓN Y OBJETO 6

2 DESCRIPCIÓN DE LA ESTRUCTURA 6

3 BASES DE CÁLCULO 7

4 INSTRUCCIONES Y NORMATIVA DE APLIACIÓN 8

5 PROGRAMAS INFORMÁTICOS EMPLEADOS EN LOS CÁLCULOS 8

6 MATERIALES, RECUBRIMIENTOS Y COEFICIENTES PARCIALES DE SEGURIDAD. 9

7 ACCIONES CONSIDERADAS EN EL CÁLCULO 9

7.1 VALORES CARACTERÍSTICOS DE LAS ACCIONES 9

7.1.1 ACCIONES PERMANENTES 9

7.1.2 ACCIONES PERMANENTES DE VALOR NO CONSTANTE 9

7.1.3 ACCIONES VARIABLES 10

7.1.4 ACCIONES ACCIDENTALES (AQUÍ ME HE QUEDADO) 11

7.2 VALORES REPRESENTATIVOS DE LAS ACCIONES 11

7.3 VALORES DE CÁLCULO DE LAS ACCIONES 12

7.3.1 ESTADOS LÍMITE ÚLTIMOS 12

7.3.2 ESTADOS LÍMITE DE SERVICIO 12

8 COMBINACIÓN DE ACCIONES 13

9 CÁLCULO DEL TABLERO 13

9.1 CÁLCULO DE ESFUERZOS EN VIGAS DEL TABLERO 13

9.2 COMPROBACIÓN DE LAS VIGAS DEL TABLERO EN SERVICIO. PRETENSADO Y ESTADO TENSIONAL DE LAS SECCIONES 13

9.3 CÁLCULO DEL TABLERO EN ELU 14

9.3.1 VIGAS PRETENSADAS 14

9.3.2 LOSA DE COMPRESIÓN 14

10 CÁLCULO Y REPARTO DE ACCIONES HORIZONTALES 15

11 CÁLCULO DE LOS APARATOS DE APOYO Y JUNTAS DE CALZADA 15

12 CÁLCULO DE ESTRIBOS CARGADERO 16

13 CÁLCULO DE PRUEBA DE CARGA 16

13.1 DESCRIPCIÓN DE LA PRUEBA DE CARGA. 16
13.2 CARGAS DE ENSAYO. 16
13.3 MEDICIONES MÍNIMAS A REALIZAR. 17
13.4 APARATOS DE MEDIDA. 17
13.5 PREPARACIÓN Y DESARROLLO DE LA PRUEBA. 17
13.6 RESULTADOS Y TOLERANCIAS. 18
13.7 INFORME DE PRUEBA DE CARGA. 19
13.8 ACTA DE PRUEBA DE CARGA. 19

1 INTRODUCCIÓN Y OBJETO

El objeto del presente documento es el de describir el procedimiento seguido en el cálculo de la Estructura E-2, que se corresponde con La Obra De Paso P.K. 0+330 (Enlace A-334), incluido en el Proyecto de Construcción de la "Autovía de Almanzora (A-334). Tramo: Intersección El Cucador – Enlace con la AL-7106 en la Concepción", en la provincia de Almería. En esta nota técnica se definen las bases de cálculo, características de los materiales, hipótesis adoptadas, medios empleados en el cálculo, resultados obtenidos y conclusiones derivadas del proceso.

Esta estructura fue diseñada y calculada en el proyecto original pero, debido a la fecha en la que se redactó este proyecto, se hace necesario actualizar los cálculos a los cambios normativos que se han producido, adaptando la estructura a la normativa vigente.

2 DESCRIPCIÓN DE LA ESTRUCTURA

La estructura E2 es una estructura recta de un solo vano de 29.00 m de luz entre ejes de apoyos y está resuelta mediante un doble tablero de vigas doble T que se apoya en cargaderos sobre tierra armada.

La planta del tablero es recta (cuenta con una pendiente transversal del 2% hacia el exterior de la estructura). La anchura de los tablero es de 11.80 m en la calzada derecha y 15.30 m en la calzada izquierda. El canto del tablero (viga más losa) es de 2.10 m. El tablero de la calzada derecha e izquierda tiene diferente anchura ya que alojan la plataforma de 2 y 3 carriles respectivamente debido a la proximidad de la estructura con el enlace con la A-334.

El tablero de la calzada izquierda se resuelve con 6 vigas pretensadas doble T de 1.85 metros de canto, dispuestas con un intereje de 2.84 metros. Sobre las vigas se dispone la losa de compresión de 25 cm de espesor mínimo y 15.3 metros de anchura, hormigonada in-situ sobre prelosas de 6 cm de canto. El tablero de la calzada derecha se resuelve con 5 vigas pretensadas doble T de 1.85 metros de canto, dispuestas con un intereje de 2.68 metros. Sobre las vigas se dispone la losa de compresión de 25 cm de espesor mínimo y 11.8 metros de anchura, hormigonada in-situ sobre prelosas de 6 cm de canto.

Todos los apoyos de las vigas son de neopreno zunchado de 500x500x171(99) anclados a la subestructura y a las vigas mediante pernos.

El cargadero es una losa de cimentación que se apoya en el suelo mejorado y reforzado con escamas de 12.70 y 16.20 m de largo (para las calzadas derecha e izquierda respectivamente), 6.00 m de ancho y un canto de 1.50 m.

La altura vista del suelo reforzado con escamas es de 10.00 m aproximadamente. El suelo reforzado está constituido por escamas hexagonales de 1.80 m de altura y 2.00 m de anchura, que cuentan con flejes en una malla de 0.60x0.65 m (vertical y horizontalmente). La longitud de los flejes para la altura máxima es de 12.65 m.

Las aletas de la estructura se resuelven también mediante suelo reforzado con escamas. Las mismas se dividen en muros de alturas de 8.50, 6.50 y 4.50 m al igual que el muro 3 del presente proyecto.

Las aletas se resuelven entonces mediante suelo reforzado con flejes planos corrugados. El muro está constituido por escamas hexagonales de 1.80 m de altura y 2.00 m de anchura, que cuentan con flejes en una malla de 0.60x0.65 m (vertical y horizontalmente). El muro se proyecta para una altura máxima característica de 8.50 m. La longitud de los flejes para la altura máxima es de 12.50

Para los pretiles de contención, dadas las características de la vía que soporta el viaducto, se disponen con clase de contención H3.

3 BASES DE CÁLCULO

El dimensionamiento de la estructura se realizará según los principios de la mecánica racional y teoría de estructuras, adaptadas al diseño estructural. Se seguirán las prescripciones recogidas en la normativa vigente en el territorio español, así como las recomendaciones y la normativa internacional de aplicación, cuando proceda. De acuerdo con lo anterior, el cálculo se realizará siguiendo el principio de los Estados Límites, que establece que la seguridad de la estructura en su conjunto, o en cualquiera de sus partes, se garantiza comprobando que la solicitación no supera la respuesta última de las mismas. Este requisito para la seguridad se expresa sintéticamente mediante la siguiente desigualdad:

$$Sd<Rd$$

Siendo Sd la solicitación de cálculo aplicable en cada caso, y Rd la respuesta última de la sección o elemento.

Para la aplicación de este criterio de seguridad, se consideran tanto situaciones de servicio como de agotamiento, esto es, Estados Límites de Servicio (ELS) y Estados Límites Últimos (ELU), de acuerdo con las definiciones dadas para los mismos en las normativas de referencia. En principio, los Estados Límites Últimos están asociados a la rotura de secciones o elementos. Para ellos, se evalúan las solicitaciones mediante la mayoración de los valores representativos de las acciones (en general característicos), utilizando los oportunos coeficientes parciales que luego se detallan. Las resistencias de las secciones o elementos se estiman mediante las características geométricas, y las resistencias minoradas de los materiales.

Por el contrario, los Estados Límites de Servicio están asociados a la pérdida de funcionalidad de la estructura. Las solicitaciones se evalúan mediante sus valores representativos, en general sin mayorar, afectados de los oportunos coeficientes de combinación, para tener en cuenta la probabilidad de ocurrencia simultánea (concomitancia) de varias acciones. Las resistencias se estiman a partir de los valores nominales de las dimensiones y resistencias de los elementos o secciones de la estructura, sin minorar.

4 INSTRUCCIONES Y NORMATIVA DE APLIACIÓN

El proyecto de la presente estructura se realizará conforme a las prescripciones recogidas en los siguientes textos normativos en vigor:

- Instrucción de Hormigón Estructural (EHE-08).
- Instrucción sobre las Acciones a considerar en el proyecto de Puentes de Carretera (IAP-11).
- Norma de construcción Sismorresistente (NCSP-07).
- Orden Circular 35/2014 Sobre Criterios De Aplicación De Sistemas De Contención De Vehículos.
- Guía de cimentaciones en obras de carretera.

5 PROGRAMAS INFORMÁTICOS EMPLEADOS EN LOS CÁLCULOS

Los cálculos de comprobación de la estructura se llevan a cabo mediante programas de aplicación tanto en el cálculo general de estructuras como en el cálculo de elementos estructurales concretos. Los programas empleados han sido desarrollados bien por empresas especializadas en la elaboración de herramientas informáticas para el cálculo de estructuras o bien por esta propia oficina técnica. El proceso de cálculo de la estructura se diseña de forma que exista la mayor fluidez posible en el intercambio de información entre las diferentes aplicaciones que controlan los subprocesos de cálculo. No obstante lo anterior, tanto los datos de partida como los resultados obtenidos, son siempre verificados en sus órdenes de magnitud, a través de comprobaciones aproximadas.

Los programas informáticos empleados son los que siguen:

a) SAP2000 NonLinear Versión 19: Programa de cálculo de estructuras que utiliza el MEF para la resolución. Desarrollado por Computers and Structures Inc. University Ave. Berkeley. Mediante dicho programa se han realizado diversos modelos de cálculo, los cuales se describen en los puntos siguientes.

b) Prontuario Informático del Hormigón Estructural 3.1. Desarrollado por la Unidad Docente de Hormigón Estructural de la E. T. S. I. C. C. P. de Madrid y el Instituto Español del Cemento y sus Aplicaciones. Adaptado a la EHE-08.

c) Módulo “Tablero de vigas” del paquete informático CivilCad3000. Permite la modelización y cálculo de tableros de vigas pretensadas, con losa de compresión de hormigón armado.

d) Diversas hojas de cálculo y programas desarrollados por el proyectista.

6 MATERIALES, RECUBRIMIENTOS Y COEFICIENTES PARCIALES DE SEGURIDAD.

Las características de los materiales a emplear en la construcción de la estructura objeto de la presente nota de cálculo son, en consonancia con lo dispuesto en la tabla 37.2.4.1.a de la Instrucción EHE-08, las siguientes, para una vida útil de proyecto de 100 años:

CUADRO DE MATERIALES EHE

MATERIALES	CALIDAD	NIVEL DE CONTROL	COEFICIENTES
HORMIGON DE LIMPIEZA Y NIVELACION	HM-15	NO ESTRUCTURAL	
HORMIGON EN CIMENTACIONES	HA-30/B/20/IIa	ESTADISTICO	$\gamma c = 1.50$
HORMIGON EN ALZADOS DE ESTRIBOS	HA-30/B/20/IIb	ESTADISTICO	$\gamma c = 1.50$
HORMIGON EN LOSA DE TABLERO	HA-30/B/20/IIb	ESTADISTICO	$\gamma c = 1.50$
HORMIGON EN VIGAS PREFABRICADAS	HP-50/B/20/IIb	ESTADISTICO	$\gamma c = 1.50$
ACERO ACTIVO	Y 1860 S7	NORMAL	$\gamma s = 1.15$
ACERO PASIVO	B 500 SD	NORMAL	$\gamma s = 1.15$
EJECUCION		INTENSO	$\gamma G = 1.35$ $\gamma G^* =$ IAP-11 $\gamma Q =$ IAP-11

MATERIALES	RECUBRIMIENTO (mm)	RELACION a/c MÁXIMA	CONTENIDO MINIMO CEMENTO (Kg/m^3)	TIPO CEMENTO
HORMIGON EN CIMENTACIONES	40	0.60	275	CEM II
HORMIGON EN ALZADOS DE ESTRIBOS	40	0.55	300	CEM II
HORMIGON EN LOSA DE TABLERO	40	0.55	300	CEM II
HORMIGON EN VIGAS PREFABRICADAS	25	0.55	300	CEM I

7 ACCIONES CONSIDERADAS EN EL CÁLCULO

La determinación de los valores característicos de las acciones, así como de sus valores representativos y de cálculo y las combinaciones a realizar con las mismas, a fin de verificar el cumplimiento de los estados límite, se lleva a cabo según lo prescrito en la Instrucción IAP-11.

7.1 VALORES CARACTERÍSTICOS DE LAS ACCIONES

7.1.1 ACCIONES PERMANENTES

a) **Peso Propio:** El valor característico del peso de los elementos estructurales de hormigón, se determina tomando como peso específico del mencionado material 25 kN/m3.

b) **Carga Permanente:** Las cargas consideradas son las siguientes:

- Pavimento: Se considera a efectos de cálculo un espesor nominal de 10 cm y un peso especifico de γ=23 kN/m^3. Se ha de considerar también la hipótesis con espesor incrementado un 50% tal y como establece la IAP.
- Pretil metálico + zócalo de hormigón: El peso de cada uno, incluido el zócalo de hormigón, es de 7 kN/ml.

7.1.2 ACCIONES PERMANENTES DE VALOR NO CONSTANTE

c) **Acciones reológicas:** Se calculan tanto los coeficientes de retracción y fluencia como el de relajación, tomando como humedad relativa del ambiente un 65%. Se supone que el comienzo de la retracción tiene lugar dos días después del hormigonado, y el de la fluencia 7 días después del hormigonado.

d) **Acciones debidas al terreno:**

- Para los **empujes** generados por el terreno sobre los estribos, se considera un peso específico de las tierras de 20 kN/m^3, y un empuje activo correspondiente a un coeficiente de empuje de Ka = 0.33.
- Con respecto a los **asientos diferenciales**, no se tienen en cuenta en el cálculo, dado que al tratarse de una estructura isostática, no genera esfuerzos sobre la misma.

7.1.3 ACCIONES VARIABLES

e) Tren de cargas.

Se introducen las siguientes acciones:

Se define el valor característico de la sobrecarga de uso considerando lo que la norma denomina grupos de cargas de tráfico. Establece la concomitancia de las distintas componentes de la sobrecarga de uso. Estos grupos son excluyentes entre sí cuando se combinan con el resto de las acciones (cargas permanentes, viento,…).

	Situación			
	Cargas Verticales		**Fuerzas Horizontales**	
Grupos de Cargas	Vehículos Pesados	Sobrecarga Uniforme	Frenado y Arranque	Fuerza Centrífuga y Transversal
gr 1 (Cargas Verticales)	Valor característico	Valor característico	-	-
gr 2 (Fuerzas Horizontales)	Valor reducido 0.75·Qik	Valor reducido 0.40·qik	Valor característico	Valor característico

Los valores característicos son:

- **Cargas Verticales y Horizontales:** se trata de las siguientes acciones:
  - Sobrecarga uniforme: en función del número de carriles virtuales, la sobrecarga será:

Situación	**q_{ik} (q_{rk}) kN/m^2**
Carril Virtual 1	9
Carril Virtual 2	2.5
Carril Virtual 3	2.5
Otros Carriles Virtuales	2.5
Área remanente	2.5

  - Vehículos Pesados: en función del número de carriles virtuales, la sobrecarga será:

Situación	**$2 \cdot Q_{ik}$ (kN)**
Carril Virtual 1	2·300
Carril Virtual 2	2·200
Carril Virtual 3	2·100
Otros Carriles Virtuales	0
Área remanente	0

  - Frenado, arranque y fuerza centrífuga: son acciones de componente horizontal y calculadas en función de los anchos de de plataforma, radio del eje del tablero, etc. En concreto, para la estructura proyectada, la fuerza resultante de frenado y arranque es de 440.76 kN en cada tablero. No se aplica fuerza centrífuga al encontrarse en una alineación recta en planta.

- **Sobrecarga en terrenos adyacentes al puente**: se adopta un valor de 10 kN/m2 al considerar esta acción, afectado del coeficiente de empuje del terreno K_a=0.333.

f) Acciones climáticas:

- **Viento:** se evaluarán las solicitaciones que la actuación del viento genera en el tablero con y sin efecto de la sobrecarga de uso y en las pilas. La velocidad de básica del viento es de 26 m/s correspondiente al mapa de isotacas.

- **Acciones térmicas:** se calcula la variación uniforme que puede experimentar la estructura. Para ello, la variación térmica considerada en el cálculo acorde a la IAP-11 corresponde a un enfriamiento de 15.8 º, y a un calentamiento de 35.3º. Con respecto al gradiente térmico, no se considera al tratarse de una estructura isostática.

- **Nieve:** no se considera la actuación de dicha acción debido a no ser concomitante con la actuación de la sobrecarga, siendo esta última mucho más desfavorable.

7.1.4 ACCIONES ACCIDENTALES (AQUÍ ME HE QUEDADO)

g) **Sismo:** Para el cálculo de la acción sísmica se han seguido las indicaciones recogidas en la NCSP-07. Los parámetros que se han adoptado son los siguientes:

- Aceleración básica: 0.14g
- Coeficiente de daño: 1.3
- Coeficiente de las Azores (K): 1.0
- Coeficiente de tipo de suelo: Dada la naturaleza del terreno, se adopta un coeficiente de 1.5
- Coeficiente de comportamiento (q): 1.0

7.2 VALORES REPRESENTATIVOS DE LAS ACCIONES

En general, para acciones permanentes, permanentes de valor no constante y accidentales, se considera un único valor representativo (que será el adoptado para la verificación de los estados límite), coincidente con el valor característico descrito en el anterior apartado.

Por el contrario, en el caso de las acciones variables, se tienen en consideración diferentes valores representativos, que se utilizarán en distintas combinaciones de acciones. Dichos valores resultan de afectar al valor característico de la acción de los coeficientes definidos en el punto 6.1.2 de la IAP-11.

ACCIÓN			Ψ_0	Ψ_1	Ψ_2
Sobrecarga de uso	gr 1, Cargas Verticales	V. Pesados	0.75	0.75	0.0
		S. Uniforme	0.4	0.4	0/0.2*
	gr 2, Fuerzas Horizontales		0.0	0.0	0.0
Viento	Fwk	Sit. Persistente	0.6	0.2	0.0
		En Construcción	0.8	0.0	0.0
Acción Térmica	Tk		0.6	0.6	0.5
Nieve	Qsn,k	En Construcción	0.8	0.0	0.0
Acción del agua	Wk	E. Hidrostático	1.0	1.0	1.0
		E.	1.0	1.0	1.0
Sobrecargas de Construcción	Qc		1.0	0.0	1.0

*El factor de simultaneidad correspondiente a la sobrecarga uniforme se tomará igual a 0, salvo en el caso de la combinación de acciones en situación sísmica, para la cual se tomará igual a 0.2.

7.3 VALORES DE CÁLCULO DE LAS ACCIONES

7.3.1 ESTADOS LÍMITE ÚLTIMOS

Para los coeficientes parciales de seguridad, γF, se adoptan los valores recogidos en la siguiente tabla:

TIPO DE ACCIÓN		SITUACIONES PERSISTENTES Y TRANSITORIAS	
		Efecto favorable	Efecto desfavorable
Permanentes		1.0	1.35
Permanentes de valor no Constante	Pretensado	1.0	1.0/1.2*
	Reológicas	1.0	1.35
	Empuje del terreno	1.0	1.5
Variables	Sobrecarga de uso	0.0	1.35
	Sobrecarga de uso en terraplenes	0.0	1.50
	Acciones climáticas	0.0	1.50
	Empujes de agua	0.0	1.50
	Sobrecargas de Construcción	0.0	1.35
Accidentales		0.0	1.0

*El valor 1.2 para verificaciones locales tales como la transmisión de la fuerza de pretensado al hormigón en zonas de anclajes, cuando se toma como valor de la acción el que corresponde a la carga máxima (tensión de rotura) del elemento a tesar.

7.3.2 ESTADOS LÍMITE DE SERVICIO

Para los coeficientes parciales de seguridad, γF, se adoptan los valores recogidos en la siguiente tabla:

TIPO DE ACCIÓN		*SITUACIONES PERSISTENTES Y TRANSITORIAS*	
		Efecto favorable	Efecto desfavorable
PERMANENTE		1.0	1.0
PERMANENTE DE VALOR NO CONSTANTE	PRETENSADO	0.9	1.10
	REOLÓGICAS	1.0	1.0
	TERRENO	1.0	1.0
VARIABLE		0.0	1.0

8 COMBINACIÓN DE ACCIONES

Las hipótesis de carga tomadas en consideración se forman combinando los valores de cálculo de las acciones cuya actuación pueda ser simultánea (acciones concomitantes), según los criterios generales prescritos en el capítulo 6.3 de la instrucción IAP-11, tanto para Estados Límite Últimos, en situaciones persistentes o transitorias y accidentales, como para Estados Límite de Servicio.

9 CÁLCULO DEL TABLERO

9.1 CÁLCULO DE ESFUERZOS EN VIGAS DEL TABLERO

Los cálculos las vigas del tablero con la actual IAP-11 se realizan con el programa de cálculo CivilCad 3000. Los esfuerzos en vigas y losas se determinan de forma evolutiva mediante una serie de modelos de cálculo (viga aislada y tablero completo), los cuales se describen en el apartado de los anejos correspondiente al cálculo del tablero.

Una vez introducidas las acciones actuantes en el modelo de cálculo, se obtienen los esfuerzos pésimos que las acciones producen en las diferentes secciones de la viga y losa. Los esfuerzos se combinan tanto en hipótesis de diseño como de servicio siguiendo los criterios de la IAP-11.

9.2 COMPROBACIÓN DE LAS VIGAS DEL TABLERO EN SERVICIO. PRETENSADO Y ESTADO TENSIONAL DE LAS SECCIONES.

Los requisitos exigibles para el cumplimiento de la comprobación en servicio son los siguientes:

- Bajo la combinación más desfavorable de acciones correspondiente a la fase en estudio, las tensiones de compresión se han de hallar siempre por debajo del 60 % de la resistencia característica a compresión del hormigón en ese momento. Ello hace necesario que en el momento de transferencia del pretensado, la resistencia característica del hormigón sea de al menos 40 Mpa.

- Se ha de comprobar que bajo la combinación de acciones frecuente, no se alcanza una apertura de fisura en vigas superior a 0.2 mm. Se ha comprobado que en combinación frecuente, las tensiones longitudinales en vigas son siempre de inferiores a la resistencia media a tracción del hormigón, por lo que se cumple automáticamente el anterior requisito.

- Bajo la combinación de acciones cuasipermanente, las armaduras activas han de encontrarse dentro de la zona comprimida de la sección.

Del cálculo realizado, se comprueba que los requisitos anteriores se cumplen adecuadamente en las vigas del tablero en estudio.

9.3 CÁLCULO DEL TABLERO EN ELU

9.3.1 VIGAS PRETENSADAS

Se han llevado a cabo las siguientes comprobaciones para las vigas en estudio:

- Comprobación de la rotura por flexión: Se comprueba que dicho requisito se cumple estrictamente en las vigas analizadas.
- Comprobación de la rotura por cortante: Se dimensiona la armadura de las almas de vigas a tal efecto.
- Comprobación de la rotura por rasante en las alas superior e inferior: Se dimensiona la armadura transversal de las alas superior e inferior para ser capaz de resistir los esfuerzos rasantes plásticos. En el ala inferior, se tiene en cuenta para la determinación del rasante, el porcentaje de pretensado que existe en las alas (exteriormente al alma), en relación con el pretensado total.
- Comprobación de la rotura por rasante en la junta de hormigonado entre viga y losa: Se ha comprobado que la armadura saliente del alma a lo largo de las vigas es suficiente para coser el esfuerzo rasante plástico generado entre la viga y la losa.

9.3.2 LOSA DE COMPRESIÓN

Para determinar los esfuerzos en la losa del tablero la aplicación CivilCad3000, emplea un modelo mixto de elementos tipo shell para la losa y frame para la viga. Con dicho modelo se determinan los esfuerzos flectores y cortantes transversales en la losa de compresión, tanto para la combinación de ELU Persistente, como para la ELS Cuasipermanente.

A partir de los momentos de diseño transversales obtenidos por el modelo, se dimensiona la armadura transversal necesaria a disponer tanto en la cara superior (frente a momentos negativos) como inferior (frente a momentos positivos).

Se obtienen también los esfuerzos cortantes pésimos en losa, y se comprueba que no es necesario disponer armadura de cortante de forma generalizada.

La armadura longitudinal general se dimensiona teniendo en cuenta que según EHE-08, ésta debe tener una capacidad no inferior al 25% de la armadura transversal correspondiente.

Finalmente se dimensiona la armadura de refuerzo a disponer en los bordes del tablero.

10 CÁLCULO Y REPARTO DE ACCIONES HORIZONTALES

Para el cálculo de la subestructura (apoyos, estribos y cimientos) se ha llevado a cabo un modelo de cálculo, que integra el comportamiento resistente de todos los elementos de la estructura, teniendo en cuenta sus dimensiones geométricas definitivas. Dadas las características de la estructura, se considera un modelo de tablero infinitamente rígido en su plano (en consonancia con lo indicado en la IAP-11).

Para la rigidez de los neoprenos frente a acciones horizontales se ha tenido en cuenta las dimensiones en planta de los mismos así como el espesor neto de goma y teniendo en cuenta además un doble valor del coeficiente G acorde a la normativa vigente los valores tenidos en cuenta en la modelización son: G_{min} = 1000 kPa / G_{max}= 1500 kPa.

A efectos de reparto de acciones horizontales, los estribos se consideran infinitamente rígidos.

Una vez confeccionado el modelo de cálculo, se han introducido todas las cargas horizontales y verticales descritas en el punto 7 de la presente memoria. El cálculo de la acción sísmica se ha llevado a cabo mediante el método modal espectral, teniendo en cuenta los periodos de vibración fundamentales tanto en sentido longitudinal como en sentido transversal que se obtienen a partir de la rigidez considerada de los neoprenos y el comportamiento infinitamente rígido en su plano del tablero.

11 CÁLCULO DE LOS APARATOS DE APOYO Y JUNTAS DE CALZADA

Los aparatos de apoyo elastoméricos de neopreno han de satisfacer las exigencias que se establecen en la UNE EN-1337-3 (en servicio) y Eurocódigo 8 (en sismo), textos actualmente vigentes. El procedimiento seguido en el cálculo es el siguiente:

En el cálculo del tablero, se hallaron las máximas reacciones en servicio que las diferentes solicitaciones ocasionan en los apoyos. Para el dimensionamiento de los aparatos de apoyo se ha de estudiar (mediante el modelo de cálculo general antes descrito) el reparto de acciones horizontales longitudinales (frenado, reológicas, térmicas y sismo longitudinal) y transversales (viento y sismo transversal), que se realiza en función de las rigideces conjuntas de estribo + aparato de apoyo, teniendo en cuenta que el módulo de elasticidad transversal de los apoyos elastoméricos de neopreno (G) depende del tipo de acciones actuantes.

En primer lugar, teniendo en cuenta las reacciones en servicio y las deformaciones por efecto de las acciones lentas (reológicas y térmicas), se predimensionan unos aparatos de apoyo que verifiquen los requisitos de máxima distorsión admisible por acciones lentas y máxima y mínima presión vertical sobre el apoyo. Seguidamente se realiza un reparto de las acciones entre estribos y pilas, mediante el procedimiento descrito en el apartado 10.

Una vez se ha obtenido el reparto de acciones horizontales entre los diferentes elementos de la estructura, se está en condiciones de abordar el dimensionamiento definitivo de los aparatos de apoyo. Con dicho reparto, se comprueba si los aparatos de apoyo propuestos verifican el resto de prescripciones establecidas en la normativa UNE EN 1337-7 para situaciones no sísmica, y el Eurocódigo 8 para situación sísmica. De cara a la modelización de los neoprenos, se tiene en consideración la indicación recogida en la UNE-EN 1337-3 relativas al módulo de deformación transversal del neopreno, con un único valor de 1000 kPa tanto para acciones rápidas de servicio como lentas. Asimismo, se realiza un doble cálculo de la acción sísmica teniendo en cuenta unos coeficientes de deformación transversal de G=1000 kPa y G=1500 kPa (según EC-8). Si los aparatos predimensionados no fuesen aptos, se dimensionarían unos distintos, volviendo a calcular el reparto de acciones y la aptitud de los nuevos apoyos, en un proceso iterativo.

La junta se dimensiona acorde a los requisitos establecidos en la NCSP-07.

12 CÁLCULO DE ESTRIBOS CARGADERO

Para el cálculo de los estribos cargadero, se confecciona un nuevo modelo de cálculo (uno para cada anchura de tablero), de tipo viga flotante, que representa el funcionamiento resistente del cimiento del estribo. El modelo se define a partir de elementos tipo shell, apoyados en un terreno elástico, con un coeficiente de balasto (conservador) de 1000 kN/m^3.

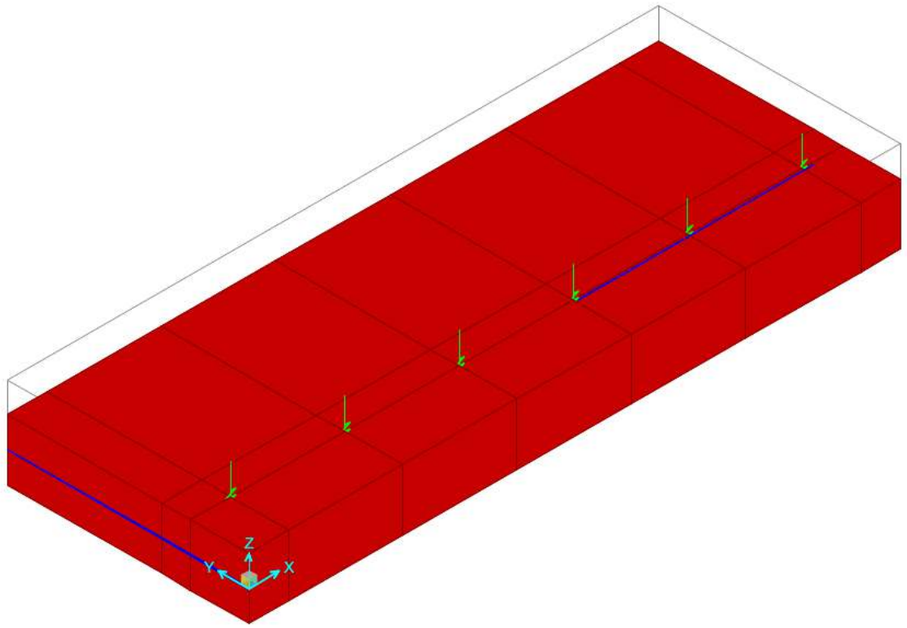

Figura 1: Modelo realizado para el cálculo de los estribos cargadero (caso de tablero con 11.8 metros de anchura)

Sobre el modelo de viga flotante se introducen las reacciones por acción en los aparatos de apoyos, extraídas del modelo de cálculo general. También se introducen las correspondientes al empuje y carga vertical generadas por el peso propio de las tierras en el trasdós, así como la sobrecarga en los terraplenes.

Los esfuerzos generados se combinan en ELS y ELU. Se comprueba que, en combinación característica, las tensiones transmitidas al terreno son compatibles con una tensión admisible de 200 kPa.

Posteriormente se lleva a cabo el cálculo del armado del estribo, en base al cumplimiento de los ELU y ELS correspondientes.

13 CÁLCULO DE PRUEBA DE CARGA

13.1 DESCRIPCIÓN DE LA PRUEBA DE CARGA.

Se define como prueba de carga el conjunto de operaciones de control, cuya realización es preceptiva en puentes y pasarelas antes de su apertura al tráfico, a fin de comprobar la adecuada concepción, la estabilidad y el buen comportamiento de la obra.

Con la realización de la prueba de carga se pretende la comprobación de la estructura antes de su puesta en servicio, y la verificación de que el puente real se comporta de acuerdo con lo previsto en los cálculos. Para ello se ejecutarán las preceptivas pruebas de carga de la estructura de acuerdo con la normativa vigente.

En este caso, la prueba de carga será de tipo estático, es decir, se aplicarán unas cargas en posiciones predeterminadas dentro de la estructura, midiéndose las deformaciones en estado de reposo. Dadas las características de esta estructura (luz, material y tipología) no es necesaria la realización de pruebas dinámicas.

Con la prueba de carga se pretenden ensayar las dos nuevas vigas de la ampliación y las dos vigas contiguas del tablero existente, sobre la que se produce una modificación de las solicitaciones al eliminarse la acera y ser objeto ahora de paso de vehículos sobre las vigas.

13.2 CARGAS DE ENSAYO.

En ningún caso las acciones del tren de cargas a utilizar y las solicitaciones a que aquéllas den lugar, podrán ser más desfavorables que el 70% de las del tren de cargas de la IAP, estimándose como suficiente si tales esfuerzos oscilan alrededor del 55-60%. Igualmente es preciso comprobar que los neoprenos de los estribos no se encuentren traccionados bajo las acciones de peso propio y tren de cargas de la puesta en carga, lo cual no sucederá en esta prueba.

El tren de cargas está formado por camiones del tipo definido en las Recomendaciones sobre Pruebas de Carga del Ministerio de Fomento, de 4 ejes con 38 Tn de peso total, debidamente tarado hasta que el total del peso del camión corresponda con lo establecido en la norma. Serán necesarios un máximo de 6 y 8 camiones de este tipo respectivamente para la hipótesis de carga prevista en cada uno de los tableros, cuya colocación en el tablero será la definida en los planos correspondientes.

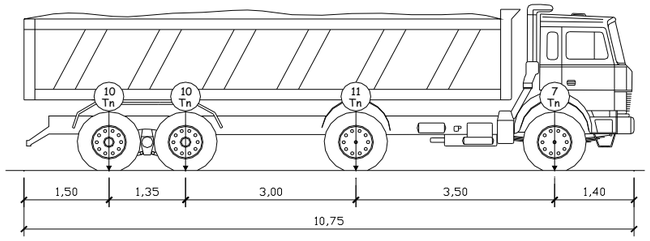

Camión tipo de 4 ejes y 38 toneladas de peso

Para la obtención de las flechas teóricas, se ha utilizado el modelo de emparrillado descrito en el cálculo del tablero. Las características de los materiales y de los modelos de discretización utilizados están definidas en el último apartado de este documento, en forma de listados de cálculo.

Se consideran necesarias cinco hipótesis de carga. Los esfuerzos logrados se recogen en los listados recogidos al final del presente documento.

13.3 MEDICIONES MÍNIMAS A REALIZAR.

Para el estado de carga proyectado, se medirán las deformaciones verticales en los puntos de control establecidos en los planos, que coinciden con las secciones de máxima flecha de los vanos.

Los pesos serán correspondientes a camiones de 38 toneladas cada uno, y se colocarán en la posición de carga indicada en los planos, manteniéndose en ella 15 minutos, descargando después el tablero y dejando otros 15 minutos antes proceder a la última medida. Se realizarán medidas:

1) Antes de empezar la prueba de carga.
2) Antes de colocar los pesos en cada hipótesis de carga.
3) A los 15 minutos de colocados los pesos en cada hipótesis de carga.
4) 15 minutos después de retirados los pesos en cada hipótesis de carga.
5) A la terminación de la prueba de carga.
6) Al día siguiente y a la misma hora en que se inició la medición de flechas, caso de que la recuperación de la flecha no fuese admisible en principio.

13.4 APARATOS DE MEDIDA.

Se utilizarán los siguientes aparatos de medida:

- Para materializar los puntos de medida se utilizarán tiros de spit, unidos a los aparatos de medida, situados en el terreno natural, por un hilo de acero a tensión constante.
- Los aparatos de medida serán flexímetros, con un rango mínimo de 10 cm y una precisión no menor de 0.01 mm (una centésima de mm). La flecha máxima teórica a medir es de unos 11 mm, mientras que la mínima es tan pequeña como pueda ser la deformación conjunta estribo-neoprenos.
- Termohigrómetros digitales con precisión de 0.5ºC en temperatura y 1% en humedad.
- Alternativamente a los flexímetros, podrá plantearse la medición con topografía de alta precisión, que garantice una precisión no menor de 0.1 mm.

13.5 PREPARACIÓN Y DESARROLLO DE LA PRUEBA.

a) Cálculo.

Con los datos de proyecto y de obra (características del hormigón, espesores, cargas permanentes, etc.), y con los tipos de camiones y cargas elegidos, se calculan las flechas en las hipótesis de carga, en los puntos señalados en los planos correspondientes.

Para calcular las flechas teóricas se presupone un módulo de elasticidad del hormigón del vigas y losa de E_{HA-50} = 32902 MPa y E_{HA-30} = 28577 MPa respectivamente.

Se ha de tener en cuenta en cualquier caso que el módulo de elasticidad real puede variar debido a múltiples factores como la edad y la historia de cargas así como las condiciones ambientales, como también las propiedades reales de la losa fisurada pueden diferir de las teóricas consideradas en el cálculo. Asimismo, las flechas medidas diferirán en una determinada cantidad de las teóricas en función de la eficiencia del sistema de